This is a digital copy of a book that was preserved for generations on library shelves before it was carefully scanned by Google as part of a project to make the world's books discoverable online.

It has survived long enough for the copyright to expire and the book to enter the public domain. A public domain book is one that was never subject to copyright or whose legal copyright term has expired. Whether a book is in the public domain may vary country to country. Public domain books are our gateways to the past, representing a wealth of history, culture and knowledge that's often difficult to discover.

Marks, notations and other marginalia present in the original volume will appear in this file - a reminder of this book's long journey from the publisher to a library and finally to you.

Usage guidelines

Google is proud to partner with libraries to digitize public domain materials and make them widely accessible. Public domain books belong to the public and we are merely their custodians. Nevertheless, this work is expensive, so in order to keep providing this resource, we have taken steps to prevent abuse by commercial parties, including placing technical restrictions on automated querying.

We also ask that you:

+ *Make non-commercial use of the files* We designed Google Book Search for use by individuals, and we request that you use these files for personal, non-commercial purposes.
+ *Refrain from automated querying* Do not send automated queries of any sort to Google's system: If you are conducting research on machine translation, optical character recognition or other areas where access to a large amount of text is helpful, please contact us. We encourage the use of public domain materials for these purposes and may be able to help.
+ *Maintain attribution* The Google "watermark" you see on each file is essential for informing people about this project and helping them find additional materials through Google Book Search. Please do not remove it.
+ *Keep it legal* Whatever your use, remember that you are responsible for ensuring that what you are doing is legal. Do not assume that just because we believe a book is in the public domain for users in the United States, that the work is also in the public domain for users in other countries. Whether a book is still in copyright varies from country to country, and we can't offer guidance on whether any specific use of any specific book is allowed. Please do not assume that a book's appearance in Google Book Search means it can be used in any manner anywhere in the world. Copyright infringement liability can be quite severe.

About Google Book Search

Google's mission is to organize the world's information and to make it universally accessible and useful. Google Book Search helps readers discover the world's books while helping authors and publishers reach new audiences. You can search through the full text of this book on the web at `http://books.google.com/`

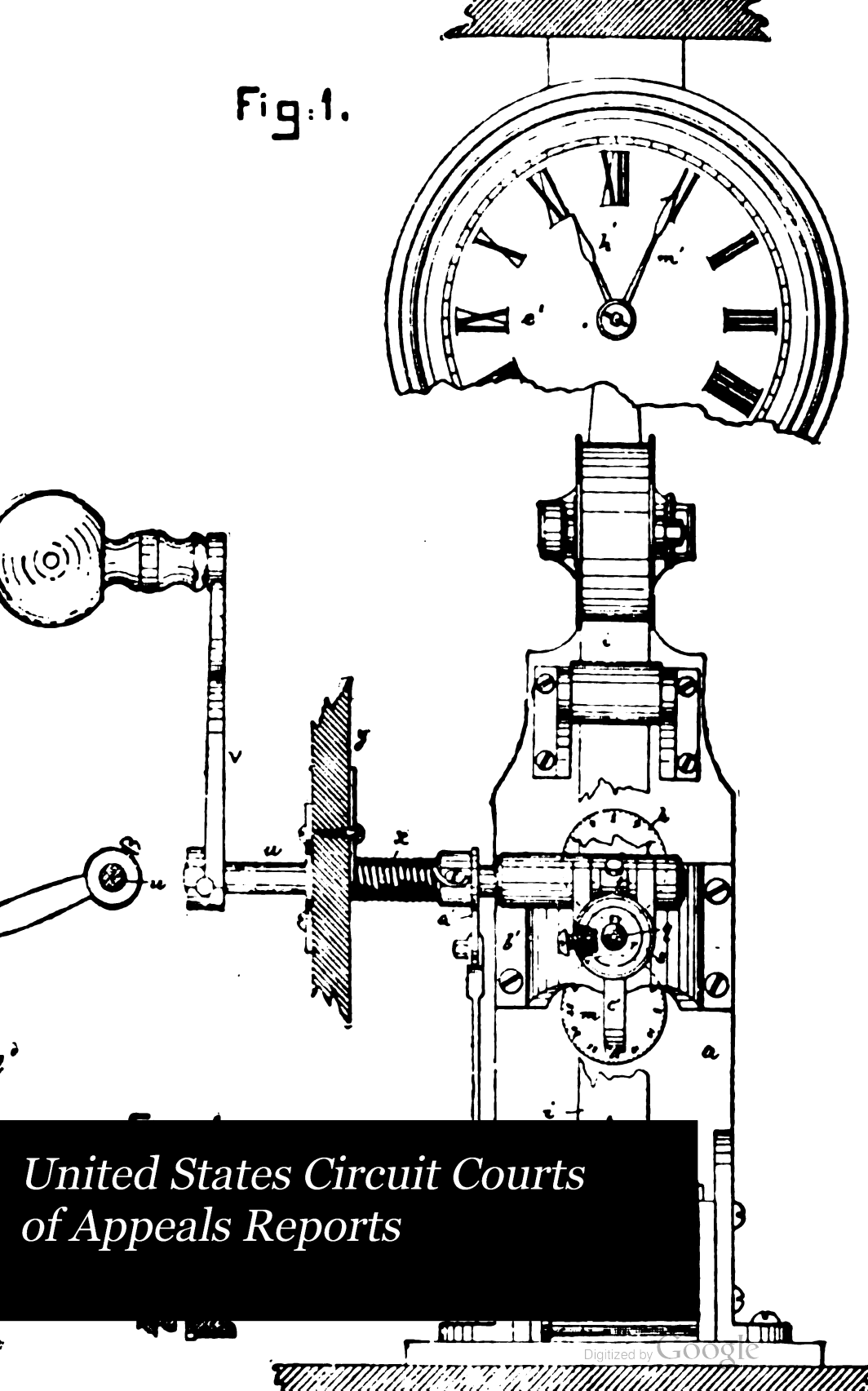

United States Circuit Courts of Appeals Reports

Digitized by Google

VE RI TAS

HARVARD LAW SCHOOL
LIBRARY

Digitized by Google

Digitized by Google

Digitized by Google

Digitized by Google

Digitized by Google

UNITED STATES CIRCUIT COURTS OF APPEALS REPORTS

WITH ANNOTATIONS

WITH TABLE OF CASES IN THE UNITED STATES CIRCUIT COURTS OF APPEALS IN WHICH REHEARINGS HAVE BEEN GRANTED OR DENIED

VOLUME 36

LAWYERS' CO-OPERATIVE PUBLISHING CO.
ROCHESTER
1899

Digitized by Google

COPYRIGHT, 1899,
BY
LAWYERS' CO-OPERATIVE PUBLISHING CO.

Rec. Nov. 16, 1900.

Digitized by Google

AMENDMENTS TO RULES.

UNITED STATES CIRCUIT COURT OF APPEALS.

Sixth Circuit.

3.[1]

[Paragraphs 5, 6, and 7 of rule 3 were amended November 21, 1898, so as to read as follows:]

At other than calendar sessions the court, on motion, will also hear appeals from interlocutory orders granting or refusing preliminary injunctions, appeals, or writs of error in any cause given priority by the statutes of the United States, and appeals from orders in habeas corpus proceedings where the petitioner is in jail, provided that the record has been printed and the brief of the moving party and due notice of the motion have been filed with opposing counsel at least six days before the opening day of the session.

Appeals in habeas corpus or criminal cases when the petitioner or appellant is in jail will be heard at any time when the court is in session after the record has been printed and the brief for the petitioner has been filed with opposing counsel six days before the day set for the hearing of the motion.

At other than calendar sessions, the court will also hear all motions and miscellaneous business, and will announce opinions. For good cause shown, on motion of either party, the court may advance any cause upon the docket to be heard at any session, whether calendar or otherwise, even though the time permitted under the rules for the filing of briefs may not have expired at the day set for hearing. Such motions for the advancements of causes will be heard only by the court upon five days' previous notice to opposing counsel.

7.[2]

[Rule 7 was amended November 21, 1898, so as to read as follows:]

ATTORNEYS AND COUNSELORS.

All attorneys and counselors permitted to practice in the supreme court of the United States, or in any circuit court of the United States, shall become attorneys and counselors in this court on taking

[1] For rule 3, as amended, see 31 C. C. A. xcviii., 90 Fed. xcviii.
[2] For rule 7, as amended October 2, 1894, see 31 C. C. A. xcix., 90 Fed. xcix.

Digitized by Google

an oath or affirmation as prescribed by rule 2 of the supreme court of the United States and upon subscribing the roll. The fee for such admission shall be ten dollars.

Every person taking the oath and paying such fee shall be entitled to a certificate of his admission, signed by the clerk.

16.[3]

[Paragraph 1 of rule 16 was amended November 21, 1898, so as to read as follows:]

DOCKETING CASES.

1. It shall be the duty of plaintiff in error or appellant to docket the case and file the record thereof with the clerk of this court by or before the return day, whether in vacation or in term time, and at the time of filing the record the plaintiff in error or appellant shall deposit with the clerk the sum of thirty-five dollars as security for costs, except in cases in which the proper showing is made and an order of this court is entered thereon allowing the cause to proceed in forma pauperis. But for good cause shown, the justice or judge who signed the citation, or any judge of this court, may enlarge the time by or before its expiration, the order of enlargement to be filed with the clerk of this court. If the plaintiff in error or appellant shall fail to comply with this rule, the defendant in error or appellee may have the cause docketed and dismissed, upon producing a certificate, whether in term time or vacation, from the clerk of the court wherein the said judgment or decree was rendered, stating the case and certifying that such writ of error or appeal has been duly sued out or allowed. And in no case shall the plaintiff in error or appellant be entitled to docket the case and file the record, after the same shall have been docketed and dismissed under this rule, unless by order of the court.

17.[4]

[Rule 17 was amended November 21, 1898, so as to read as follows:]

DOCKET.

The clerk shall enter upon a docket all cases brought to and pending in the court in their proper chronological order, and such docket shall be called at every calendar session, as provided in rules 3 and 37. And if a case is called for hearing at two calendar sessions successively, and upon the call at the second session neither party is prepared to argue it, it will be dismissed at the cost of the plaintiff in error or appellant, unless sufficient cause is shown for further postponement.

[3] For rule 16, as amended, see 31 C. C. A. c., 90 Fed. c.
[4] For rule 17, as amended October 22, 1894, see 31 C. C. A. cl., 90 Fed. cl.

Digitized by Google

23.[5]

[Paragraph 6 of rule 23 was amended November 21, 1898, so as to read as follows:]

6. In any case where the record shall have been printed in the court below, either circuit judge may, on the written application of the plaintiff in error or appellant, order that such printed record be used in this court. In such case the judge shall require, as a condition of making the order, a certificate of the clerk of this court that the record is in accordance with the printing rules and is properly indexed, in which case the supervision fee provided in table of costs,[6] rule 31, shall be charged and collected by the clerk.

[5] For rule 23, as amended, see 31 C. C. A. cii., 90 Fed. cii.
[6] See 31 C. C. A. clxxi., 90 Fed. clxxi.

Digitized by Google

JUDGES,

OF THE

UNITED STATES CIRCUIT COURTS OF APPEALS AND THE CIRCUIT AND DISTRICT COURTS.

FIRST CIRCUIT.

Hon. HORACE GRAY, Circuit Justice.....Washington, D. C.
Hon. LE BARON B. COLT, Circuit Judge.....Bristol, R. I.
Hon. WILLIAM L. PUTNAM, Circuit Judge.....Portland, Me.
Hon. NATHAN WEBB, District Judge, Maine.....Portland, Me.
Hon. EDGAR ALDRICH, District Judge, New Hampshire.....Littleton, N. H.
Hon. FRANCIS C. LOWELL, District Judge, Massachusetts.....Boston, Mass.
Hon. ARTHUR L. BROWN, District Judge, Rhode Island.....Providence, R. I.

SECOND CIRCUIT.

Hon. RUFUS W. PECKHAM, Circuit Justice.....Washington, D. C.
Hon. WILLIAM J. WALLACE, Circuit Judge.....Albany, N. Y.
Hon. E. HENRY LACOMBE, Circuit Judge.....New York, N. Y.
Hon. NATHANIEL SHIPMAN, Circuit Judge.....Hartford, Conn.
Hon. WILLIAM K. TOWNSEND, District Judge, Connecticut.....New Haven, Conn.
Hon. ALFRED C. COXE, District Judge, N. D. New York.....Utica, N. Y.
Hon. ADDISON BROWN, District Judge, S. D. New York.....New York, N. Y.
Hon. EDWARD B. THOMAS, District Judge, E. D. New York....29 Liberty St., New York.
Hon. HOYT H. WHEELER, District Judge, Vermont.....Brattleboro, Vt

THIRD CIRCUIT.

Hon. GEORGE SHIRAS, Jr., Circuit Justice.....Washington, D. C.
Hon. MARCUS W. ACHESON, Circuit Judge.....Pittsburgh, Pa.
Hon. GEORGE M. DALLAS, Circuit Judge.....Philadelphia, Pa.
Hon. GEORGE GRAY, Circuit Judge .....Wilmington, Del.
Hon. EDWARD G. BRADFORD, District Judge, Delaware.....Wilmington, Del.
Hon. ANDREW KIRKPATRICK, District Judge, New Jersey.....Newark, N. J.
Hon. JOHN B. McPHERSON, District Judge, E. D. Pennsylvania .....Harrisburg, Pa.
Hon. JOSEPH BUFFINGTON, District Judge, W. D. Pennsylvania.....Pittsburgh, Pa.

FOURTH CIRCUIT.

Hon. MELVILLE W. FULLER, Circuit Justice.....Washington, D. C.
Hon. NATHAN GOFF, Circuit Judge.....Clarksburg, W. Va.
Hon. CHARLES H. SIMONTON, Circuit Judge.....Charleston, S. C.
Hon. THOMAS J. MORRIS, District Judge, Maryland.....Baltimore, Md.
Hon. THOMAS R. PURNELL, District Judge, E. D. North Carolina.....Raleigh, N. C.
Hon. HAMILTON G. EWART, Dist. Judge, W. D. North Carolina[1]..Hendersonville, N. C.

[1] Commissioned April 13, 1899.

Digitized by Google

Hon. WILLIAM H. BRAWLEY, District Judge, E. and W. D. South Car..Charleston, S. C.
Hon. EDMUND WADDILL, Jr., District Judge, E. D. Virginia.....Richmond, Va.
Hon. JOHN PAUL, District Judge, W. D. Virginia.....Harrisonburg, Va.
Hon. JOHN J. JACKSON, District Judge, West Virginia.....Parkersburg, W. Va.

FIFTH CIRCUIT.

Hon. EDWARD D. WHITE, Circuit Justice.....Washington, D. C.
Hon. DON A. PARDEE, Circuit Judge.....New Orleans, La.
Hon. A. P. McCORMICK, Circuit Judge.....Dallas, Tex.
Hon. DAVID D. SHELBY, Circuit Judge .....Huntsville, Ala.
Hon. JOHN BRUCE, District Judge, M. and N. D. Alabama.....Montgomery, Ala.
Hon. HARRY T. TOULMIN, District Judge, S. D. Alabama.....Mobile, Ala.
Hon. CHARLES SWAYNE, District Judge, N. D. Florida.....Pensacola, Fla.
Hon. JAMES W. LOCKE, District Judge, S. D. Florida.....Jacksonville, Fla.
Hon. WILLIAM T. NEWMAN, District Judge, N. D. Georgia.....Atlanta, Ga.
Hon. EMORY SPEER, District Judge, S. D. Georgia.....Macon, Ga.
Hon. CHARLES PARLANGE, District Judge, E. D. Louisiana.....New Orleans, La.
Hon. ALECK BOARMAN, District Judge, W. D. Louisiana.....Shreveport, La.
Hon. HENRY C. NILES, District Judge, N. and S. D. Mississippi.....Kosciusko, Miss.
Hon. DAVID E. BRYANT, District Judge, E. D. Texas.....Sherman, Tex.
Hon. EDWARD R. MEEK, District Judge, N. D. Texas. .....Ft. Worth, Tex.
Hon. THOMAS S. MAXEY, District Judge, W. D. Texas.....Austin, Tex.

SIXTH CIRCUIT.

Hon. JOHN M. HARLAN, Circuit Justice.....Washington, D. C.
Hon. WILLIAM H. TAFT, Circuit Judge.....Cincinnati, Ohio.
Hon. HORACE H. LURTON, Circuit Judge.....Nashville, Tenn.
Hon. WILLIAM R. DAY, Circuit Judge.....Canton, Ohio.
Hon. WALTER EVANS, District Judge, Kentucky. .....Louisville, Ky.
Hon. HENRY H. SWAN, District Judge, E. D. Michigan.....Detroit, Mich.
Hon. HENRY F. SEVERENS, District Judge, W. D. Michigan.....Grand Rapids, Mich.
Hon. AUGUSTUS J. RICKS, District Judge, N. D. Ohio.....Cleveland, Ohio.
Hon. ALBERT C. THOMPSON, District Judge, S. D. Ohio .....Cincinnati, Ohio.
Hon. CHARLES D. CLARK, District Judge, E. and M. D. Tennessee....Chattanooga, Tenn.
Hon. ELI S. HAMMOND, District Judge, W. D. Tennessee.....Memphis, Tenn.

SEVENTH CIRCUIT.

Hon. HENRY B. BROWN, Circuit Justice.....Washington, D. C.
Hon. WILLIAM A. WOODS, Circuit Judge.....Indianapolis, Ind.
Hon. JAMES G. JENKINS, Circuit Judge.....Milwaukee, Wis.
Hon. PETER S. GROSSCUP, Circuit Judge .....Chicago, Ill.
Hon. CHRISTIAN C. KOHLSAAT, District Judge, N. D. Illinois.....Chicago
Hon. WILLIAM J. ALLEN, District Judge, S. D. Illinois.....Springfield, Ill.
Hon. JOHN H. BAKER, District Judge, Indiana.....Indianapolis, Ind.
Hon. WILLIAM H. SEAMAN, District Judge, E. D. Wisconsin.....Sheboygan, Wis.
Hon. ROMANZO BUNN, District Judge, W. D. Wisconsin.....Madison, Wis.

EIGHTH CIRCUIT.

Hon. DAVID J. BREWER, Circuit Justice.....Washington, D. C.
Hon. HENRY C. CALDWELL, Circuit Judge.....Little Rock, Ark.
Hon. WALTER H. SANBORN, Circuit Judge.....St. Paul, Minn.
Hon. AMOS M. THAYER, Circuit Judge.....St. Louis, Mo.
Hon. JOHN A. WILLIAMS, District Judge, E. D. Arkansas.....Little Rock, Ark.
Hon. JOHN H. ROGERS, District Judge, W. D. Arkansas.....Ft. Smith, Ark.
Hon. MOSES HALLETT, District Judge, Colorado.....Denver, Colo.
Hon. OLIVER P. SHIRAS, District Judge, N. D. Iowa.....Dubuque, Iowa.

Digitized by Google

Hon. JOHN S. WOOLSON, District Judge, S. D. Iowa.....Des Moines, Iowa.
Hon. WILLIAM C. HOOK, District Judge, Kansas. .....Leavenworth, Kan.
Hon. WM. LOCHREN, District Judge, Minnesota.....Minneapolis, Minn.
Hon. ELMER B. ADAMS, District Judge, E. D. Missouri.....St. Louis, Mo.
Hon. JOHN F. PHILIPS, District Judge, W. D. Missouri.....Kansas City, Mo.
Hon. W. H. MUNGER, District Judge, Nebraska.....Omaha, Neb.
Hon. CHARLES F. AMIDON, District Judge, North Dakota.....Fargo, N. D.
Hon. JOHN E. CARLAND, District Judge, South Dakota.....Sioux Falls, S. D.
Hon. JOHN A. MARSHALL, District Judge, Utah.....Salt Lake City, Utah.
Hon. JOHN A. RINER, District Judge, Wyoming.....Cheyenne, Wyo.

NINTH CIRCUIT.

Hon. JOSEPH McKENNA, Circuit Justice.....Washington, D. C.
Hon. WM. W. MORROW, Circuit Judge.....San Francisco, Cal.
Hon. WILLIAM B. GILBERT, Circuit Judge.....Portland, Or.
Hon. ERSKINE M. ROSS, Circuit Judge.....Los Angeles, Cal.
Hon. JOHN J. DE HAVEN, District Judge, N. D. California.....San Francisco, Cal.
Hon. OLIN WELLBORN, District Judge, S. D. California.....Los Angeles, Cal.
Hon. HIRAM KNOWLES, District Judge, Montana.....Helena, Mont.
Hon. CORNELIUS H. HANFORD, District Judge, Washington.....Seattle, Wash.
Hon. THOMAS P. HAWLEY, District Judge, Nevada.....Carson City, Nev.
Hon. CHARLES B. BELLINGER, District Judge, Oregon.....Portland, Or.
Hon. JAMES H. BEATTY, District Judge, Idaho.....Boise City, Idaho.
Hon. CHARLES S. JOHNSON, District Judge, Alaska.....Sitka.

Digitized by Google

CASES REPORTED.

Page

Alabama Iron & Railway Co. v. Austin 536
American Credit Indemnity Co. v. Carrollton Furniture Mfg. Co... 671
American Sugar-Refining Co. v. Maddock 42
Anderson v. Condict..... 437
Andruss v. People's Building, Loan & Saving Ass'n..... 336
Angle v. Chicago, St. P., M. & O. Ry. Co. 438
Angus, Irvine v..... 580
Ashton Valve Co., Crosby Steam Gage & Valve Co. v..... 335
Augusta Min. & Inv. Co., Manhattan Trust Co. v..... 541
Augusta Min. & Inv. Co., Reinhart v. 541
Austin, Alabama Iron & Railway Co. v. 536

Bailey, Pine Mountain Iron & Coal Co. v. 229
Baird, Grand Trunk Ry. Co. of Canada v. 574
Bancroft v. Hambly..... 595
Bancroft-Whitney Co., Pacific Coast S. S. Co. v..... 135
Barnstable, The 199
Barry Towing & Wrecking Co. v. Inter-Ocean Coal & Coke Co.... 627
Beard, C. B. Congdon & Co. v.... 56
Beard, Lamson v..... 56
Beard, Phelps v. 56
Beck, Supreme Lodge Knights of Pythias of the World v..... 467
Bedford Quarries Co. v. Thomlinson 272
Bell, Sellers v..... 502
Berberich, Western Coal & Mining Co. v..... 364
Board of Com'rs of Routt County, Haley Live-Stock Co. v..... 350
Board of Education of City of Huron, S. D., v. Monadnock Sav. Bank of East Jaffrey, N. H.... 278

Page

Board of Education of City of Huron, S. D., v. National Life Ins. Co. of Montpelier, Vt..... 278
Board of Education of City of Huron, S. D., v. Peaslee..... 278
Board of Levee Inspectors of Chicot County v. Crittenden..... 418
Bowen v. Needless Nat. Bank.... 553
Brewer v. Penn Mut. Life Ins. Co. 289
Briggs v. Duell..... 38
British America Assur. Co. of Toronto, Canada, McElroy v..... 615
Brown, Learned v..... 524
Brown, Rumble v..... 524
Bundy Mfg. Co. v. Detroit Time-Register Co..... 375

Camp v. Zellars..... 501
Cape Fear Towing & Transportation Co., Ulster S. S. Co. v..... 201
Carlisle, Journal Co. v..... 475
Carlisle, Times Pub. Co. v..... 475
Carlisle, World Pub. Co. v..... 475
Carrollton Furniture Mfg. Co., American Credit Indemnity Co. v. 671
Case v. Hall..... 259
Casey, Warren v..... 29
C. B. Congdon & Co. v. Beard.... 56
Central Pac. R. Co., United States v. 546
Central Trust Co. of New York v. Chattanooga, R. & C. R. Co.... 241
Central Trust Co. of New York, Hubinger v..... 494
Central Trust Co. of New York, State of Minnesota v..... 214
Chattanooga, R. & C. R. Co., Central Trust Co. of New York v... 241
Chicago, St. P., M. & O. Ry. Co., Angle v. 438
Christy v. Hygeia Pneumatic Bicycle Saddle Co..... 31
City of Altoona, Jutte & Foley Co. v. 84
City of Helena v. Mills..... 1

Digitized by Google

Page
City of Lampasas v. Talcott..... 318
City of Pittsburg v. Murphy..... 654
City of Pontiac v. Talbot Pav. Co. 88
Clarke v. Northwestern Mut. Life Ins. Co. 233
Clune v. Ristine..... 450
Colorado Eastern Ry. Co. v. Union Pac. Ry. Co. 263
Columbia Nat. Bank of Tacoma, Wash., Rand v. 292
Condict, Anderson v..... 437
Congdon & Co. v. Beard..... 56
Continental Nat. Bank of Memphis, Tenn., Richardson v..... 315
Continental Trust Co., Hamlin v.. 155
Continental Trust Co., Rose v.... 155
Continental Trust Co., Toledo, St. L. & K. C. R. Co. v..... 155
Cooper v. Hill..... 402
Cooper v. Newell..... 498
Crittenden, Board of Levee Inspectors of Chicot County v.... 418
Crosby Steam Gage & Valve Co. v. Ashton Valve Co..... 335
Curtis, In re..... 430
Curtis v. Lakin..... 222

Detroit Crude-Oil Co. v. Grable.. 94
Detroit Time-Register Co., Bundy Mfg. Co. v..... 375
Dickey v. Dickey..... 211
Dimick v. Shaw..... 347
Dingman, Hawgood & Avery Transit Co. v. 627
D. M. Osborne & Co., Richardson v. 610
Dravis, Kohn v..... 253
Duell, Briggs v..... 38
Dulaney v. Scudder..... 52
Dunning, In re..... 437

Eagle Pencil Co., Tower v..... 294
England, Supreme Lodge Knights of Pythias v..... 298

Farmers' Loan & Trust Co. of New York, Harrison v..... 443
Fidelity & Deposit Co. of Maryland, Monongahela Coal Co. v.. 444
First Nat. Bank of Arkansas City v. Leech..... 262
First Nat. Bank of Hailey, G. V. B. Min. Co. v..... 633
Francis-Valentine Co., In re..... 499
Fred M. Lawrence, The..... 631

Page
Galeton Cotton Mills, Huguley Mfg. Co. v..... 236
Garner v. Trumbull..... 361
Garrard v. Silver Peak Mines.... 603
Geo. M. West Co. v. Lea Bros. & Co. 680
Goshorn, Staunton v..... 75
Grable, Detroit Crude-Oil Co. v... 94
Grand Trunk Ry. Co. of Canada v. Baird 574
Gregory, Pike v..... 299
Grounds, Sandham v..... 103
G. V. B. Min. Co. v. First Nat. Bank of Hailey 633

Haley Live-Stock Co. v. Board of Com'rs of Routt County 350
Hall, Case v..... 259
Hambly, Bancroft v..... 595
Hamlin v. Continental Trust Co. 155
Hanson v. Smith..... 581
Harby, Texas & P. Ry. Co. v..... 353
Harrison v. Farmers' Loan & Trust Co. of New York..... 443
Harsha, United States v..... 681
Harvard Pub. Co. v. Syndicate Pub. Co. 470
Hathorn Mfg. Co. v. Simonds Rolling-Mach. Co. 24
Hawgood & Avery Transit Co. v. Dingman 627
Hays v. James Rees & Sons Co... 45
Henderson, Lafourche Packet Co. v. 519
Hill, Cooper v..... 402
Hirsch, United States v..... 681
Hirsh, Rose v..... 132
Hood, Pittsburg, C. & St. L. Ry. Co. v. 423
Hook v. Mercantile Trust Co. of New York..... 645
Howard Ins. Co. of New York v. Silverberg 549
Hubinger v. Central Trust Co. of New York 494
Huguley Mfg. Co. v. Galeton Cotton Mills 236
Hygeia Pneumatic Bicycle Saddle Co., Christy v..... 31

Improved Order of Red Men's Hall Ass'n of San Francisco, Overweight Counterbalance Elevator Co. v. 125
International Trust Co., Town of Greenburg v. 471

Digitized by Google

Page
Inter-Ocean Coal & Coke Co., Barry Towing & Wrecking Co. v.. 627
Irvine v. Angus..... 580
Iselin, United States v..... 681

James Rees & Sons Co., Hays v. 45
Jones, Owen v..... 241
Journal Co. v. Carlisle..... 475
Jutte & Foley Co. v. City of Altoona 84

Kearney, Liverpool & London & Globe Ins. Co. v..... 265
Kensington, The 533
Kerby-Dennis Co., In re..... 677
King v. Ritter..... 680
Knickerbocker Steam Towage Co., St. Paul Fire & Marine Ins. Co. v. 19
Kohn v.. Dravis..... 253

Lafourche Packet Co. v. Henderson 519
Lakin, Curtis v..... 222
Lamson v. Beard..... 56
Lansing v. Stanisics..... 306
Lawrence, The Fred M..... 631
Lea Bros. & Co., Geo. M. West Co. v. 680
Learned v. Brown..... 524
Leech, First Nat. Bank of Arkansas City v..... 262
Lee Sum, Reisterer v..... 285
Leete, Pacific Mill & Mining Co. v. 587
Liverpool & London & Globe Ins. Co. v. Kearney..... 265
Lockhart, Mears v..... 239
Loree, Richardson v..... 301
Louisville Banking Co. of Louisville, Ky., Richardson v..... 307

McCormick, Northern Pac. Ry. Co. v. 560
McDonald v. Williams..... 681
McElroy v. British America Assur. Co. of Toronto, Canada..... 615
Maddock, American Sugar-Refining Co. v..... 42
Manhattan Trust Co. v. Augusta Min. & Inv. Co..... 541
Mears v. Lockhart..... 239
Mercantile Trust Co. of New York, Hook v. 645

Page
Merchants' Nat. Bank of Helena, Mont., v. School Dist. No. 8 of Meagher County, Mont..... 432
Mills, City of Helena v..... 1
Monadnock Sav. Bank of East Jaffrey, N. H., Board of Education of City of Huron, S. D., v.. 278
Monongahela Coal Co. v. Fidelity & Deposit Co. of Maryland..... 444
Munger, National Bank of Oshkosh v. 659
Murphy, City of Pittsburg v..... 654

National Bank of Oshkosh v. Munger 659
National Life Ins. Co. of Montpelier, Vt., Board of Education of City of Huron, S. D., v..... 278
National Loan & Investment Co. v. Rockland Co..... 370
Needless Nat. Bank, Bowen v.... 553
Newell, Cooper v..... 498
Northern Pac. Ry. Co. v. McCormick 560
Northwestern Mut. Life Ins. Co., Clarke v. 233

Osborne & Co., Richardson v..... 610
Overweight Counterbalance Elevator Co. v. Improved Order of Red Men's Hall Ass'n of San Francisco 125
Owen v. Jones..... 241

Pacific Coast S. S. Co. v. Bancroft-Whitney Co..... 135
Pacific Mill & Mining Co. v. Leete 587
Patrick, Underwood v..... 330
Peaslee, Board of Education of City of Huron, S. D., v..... 278
Penn Mut. Life Ins. Co., Brewer v. 289
People's Building, Loan & Saving Ass'n, Andruss v..... 336
Peters v. United States..... 105
Phelps v. Beard..... 56
Pike v. Gregory..... 299
Pine Mountain Iron & Coal Co. v. Bailey 229
Pittsburg, C. & St. L. Ry. Co. v. Hood 423
Platten, Southern Exp. Co. v.... 46
Prout, Van Volkenburgh v..... 541

Rand v. Columbia Nat. Bank of Tacoma, Wash. 292

Digitized by Google

Page
Rand v. Tillinghast..... 292
Rapier, Young v..... 248
Rees & Sons Co., Hays v..... 45
Reinhart v. Augusta Min. & Inv. Co. 541
Reisinger, United States v..... 626
Reisterer v. Lee Sum..... 285
Richardson v. Continental Nat. Bank of Memphis, Tenn..... 315
Richardson v. D. M. Osborne & Co. 610
Richardson v. Loree 301
Richardson v. Louisville Banking Co. of Louisville, Ky..... 307
Ristine, Clune v..... 450
Ritter, King v..... 680
Robinson v. Southern Nat. Bank of New York..... 584
Rockland Co., National Loan & Investment Co. v..... 370
Roper, Tennent-Stribling Shoe Co. v. 455
Rose v. Continental Trust Co.... 155
Rose v. Hirsh..... 132
Rumble v. Brown..... 524
Runyon, Ryan v..... 36
Russell v. Young..... 71
Ryan v. Runyon..... 36

St. Paul Fire & Marine Ins. Co. v. Knickerbocker Steam Towage Co. 19
Sandham v. Grounds..... 103
Sappho, The,..... 395
Saratoga, The,..... 208
School Dist. No. 8, of Meagher County, Mont., Merchants' Nat. Bank of Helena, Mont., v..... 432
Scott v. Texas & P. Ry. Co..... 282
Scudder, Dulaney v..... 52
Sellers v. Bell..... 502
Shaw, Dimick v..... 347
Silverberg, Howard Ins. Co. of New York v..... 549
Silver Peak Mines, Garrard v.... 603
Simonds Rolling-Mach. Co. v. Hathorn Mfg. Co..... 24
Smith, Hanson v..... 581
Smith, State Nat. Bank of Ft. Worth, Tex., v..... 412
Southern Exp. Co. v. Platten..... 46
Southern Nat. Bank of New York, Robinson v..... 584
Stanisics, Lansing v..... 306

Page
State Nat. Bank of Ft. Worth, Tex., v. Smith..... 412
State of Minnesota v. Central Trust Co. of New York..... 214
Staunton v. Goshorn..... 75
Supreme Lodge Knights of Pythias v. England..... 298
Supreme Lodge Knights of Pythias of the World v. Beck..... 467
Syndicate Pub. Co., Harvard Pub. Co. v..... 470

Talbot Pav. Co., City of Pontiac v. 88
Talcott, City of Lampasas v..... 318
Tennent-Stribling Shoe Co. v. Roper 455
Texas & P. Ry. Co. v. Harby..... 353
Texas & P. Ry. Co., Scott v..... 282
Thomlinson, Bedford Quarries Co. v. 272
Tillinghast, Rand v..... 292
Times Pub. Co. v. Carlisle..... 475
Toledo, St. L. & K. C. R. Co. v. Continental Trust Co..... 155
Tower v. Eagle Pencil Co..... 294
Town of Greenburg v. International Trust Co..... 471
Trumbull, Garner v..... 361

Ulster S. S. Co. v. Cape Fear Towing & Transportation Co..... 201
Underwood v. Patrick..... 330
Union Pac. Ry. Co., Colorado Eastern Ry. Co. v..... 263
United States v. Central Pac. R. Co. 546
United States v. Harsha..... 681
United States v. Hirsch..... 681
United States v. Iselin..... 681
United States v. Reisinger..... 626
United States, Peters v..... 105

Van Volkenburgh v. Prout..... 541

Warren v. Casey..... 29
West Co. v. Lea Bros. & Co..... 680
Western Coal & Mining Co. v. Berberich 364
Williams, McDonald v..... 681
World Pub. Co. v. Carlisle..... 475

Young v. Rapier..... 248
Young, Russell v..... 71

Zellars, Camp v..... 501

Digitized by Google

CASES REPORTED.

ARRANGED UNDER THEIR RESPECTIVE CIRCUITS.

FIRST CIRCUIT.

Page

American Sugar-Refining Co. v. Maddock 42

Barnstable, The 199

Crosby Steam Gage & Valve Co. v. Ashton Valve Co..... 335

Hathorn Mfg. Co. v. Simonds Rolling-Mach. Co. 24

Pike v. Gregory..... 299

St. Paul Fire & Marine Ins. Co. v. Knickerbocker Steam Towage Co. 19

Simonds Rolling-Mach. Co. v. Hathorn Mfg. Co..... 24

SECOND CIRCUIT.

American Credit Indemnity Co. v. Carrollton Furniture Mfg. Co... 671

Briggs v. Duell..... 38

Fred M. Lawrence, The..... 631

Grand Trunk Ry. Co. of Canada v. Baird 574

Kensington, The 533

Lawrence, The Fred M..... 631

McDonald v. Williams..... 681

Reisterer v. Lee Sum..... 285

Richardson v. D. M. Osborne & Co. 610

Robinson v. Southern Nat. Bank of New York..... 584

Page

Saratoga, The,..... 208

Tower v. Eagle Pencil Co..... 294

Town of Greenburg v. International Trust Co..... 471

United States v. Hirsch..... 681

United States v. Iselin..... 681

United States v. Reisinger..... 626

THIRD CIRCUIT.

City of Pittsburg v. Murphy..... 654

Harvard Pub. Co. v. Syndicate Pub. Co. 470

Hays v. James Rees & Sons Co... 45

Jutte & Foley Co. v. City of Altoona 84

Rose v. Hirsh..... 132

Ryan v. Runyon..... 36

Sandham v. Grounds..... 103

Warren v. Casey..... 29

FOURTH CIRCUIT.

Christy v. Hygeia Pneumatic Bicycle Saddle Co..... 31

Geo. M. West Co. v. Lea Bros. & Co. 680

King v. Ritter..... 680

Sappho. The..... 395

Staunton v. Goshorn..... 75

West Co. v. Lea Bros. & Co..... 680

Digitized by Google

FIFTH CIRCUIT.

Page
Alabama Iron & Railway Co. v. Austin 536
Andruss v. People's Building, Loan & Saving Ass'n..... 336

Camp v. Zellars..... 501
Central Trust Co. of New York v. Chattanooga, R. & C. R. Co.... 241
City of Lampasas v. Talcott..... 318
Cooper v. Newell..... 498

Dulaney v. Scudder..... 52

Harrison v. Farmers' Loan & Trust Co. of New York..... 443
Huguley Mfg. Co. v. Galeton Cotton Mills 236

Lafourche Packet Co. v. Henderson 519
Learned v. Brown..... 524

Manhattan Trust Co. v. Augusta Min. & Inv. Co..... 541
Monongahela Coal Co. v. Fidelity & Deposit Co. of Maryland..... 444

Owen v. Jones..... 241

Reinhart v. Augusta Min. & Inv. Co. 541
Richardson v. Continental Nat. Bank of Memphis, Tenn..... 315
Richardson v. Loree 301
Richardson v. Louisville Banking Co. of Louisville, Ky..... 307
Rumble v. Brown..... 524

Scott v. Texas & P. Ry. Co..... 282
Sellers v. Bell..... 502
Southern Exp. Co. v. Platten..... 46
State Nat. Bank of Ft. Worth, Tex., v. Smith..... 412

Tennent-Stribling Shoe Co. v. Roper 455
Texas & P. Ry. Co. v. Harby..... 353

Ulster S. S. Co. v. Cape Fear Towing & Transportation Co..... 201

Van Volkenburgh v. Prout..... 541

Young v. Rapier..... 248

SIXTH CIRCUIT.

Page
Bundy Mfg. Co. v. Detroit Time-Register Co..... 375

Detroit Crude-Oil Co. v. Grable.. 94

Hamlin v. Continental Trust Co. 155

Pittsburg, C. & St. L. Ry. Co. v. Hood 423

Rose v. Continental Trust Co.... 155
Russell v. Young..... 71

Toledo, St. L. & K. C. R. Co. v. Continental Trust Co..... 155

United States v. Harsha..... 681

SEVENTH CIRCUIT.

Anderson v. Condict..... 437
Angle v. Chicago, St. P., M. & O. Ry. Co. 438

Bedford Quarries Co. v. Thomlinson 272

C. B. Congdon & Co. v. Beard.... 56
City of Pontiac v. Talbot Pav. Co. 88
Congdon & Co. v. Beard..... 56
Curtis, In re..... 430

Hook v. Mercantile Trust Co. of New York..... 645

Kerby-Dennis Co., In re..... 677

Lamson v. Beard..... 56

National Bank of Oshkosh v. Munger 659

Phelps v. Beard..... 56

EIGHTH CIRCUIT.

Barry Towing & Wrecking Co. v. Inter-Ocean Coal & Coke Co.... 627
Board of Education of City of Huron, S. D., v. Monadnock Sav. Bank of East Jaffrey, N. H.... 278
Board of Education of City of Huron, S. D., v. National Life Ins. Co. of Montpelier, Vt..... 278

Digitized by Google

Page
Board of Education of City of Huron, S. D., v. Peaslee..... 278
Board of Levee Inspectors of Chicot County v. Crittenden..... 418
Brewer v. Penn Mut. Life Ins. Co. 289

Case v. Hall..... 259
Clarke v. Northwestern Mut. Life Ins. Co. 233
Clune v. Ristine..... 450
Colorado Eastern Ry. Co. v. Union Pac. Ry. Co. 263
Cooper v. Hill..... 402
Curtis v. Lakin..... 222

Dickey v. Dickey..... 211
Dimick v. Shaw..... 347

First Nat. Bank of Arkansas City v. Leech..... 262

Garner v. Trumbull..... 361

Haley Live-Stock Co. v. Board of Com'rs of Routt County 350
Hawgood & Avery Transit Co. v. Dingman 627
Hubinger v. Central Trust Co. of New York 494

Journal Co. v. Carlisle..... 475

Kohn v. Dravis..... 253

Lansing v. Stanisics..... 306
Liverpool & London & Globe Ins. Co. v. Kearney..... 265

Mears v. Lockhart..... 239

National Loan & Investment Co. v. Rockland Co..... 370

Pine Mountain Iron & Coal Co. v. Bailey 229

Rand v. Columbia Nat. Bank of Tacoma, Wash. 292
Rand v. Tillinghast..... 292

State of Minnesota v. Central Trust Co. of New York..... 214
Supreme Lodge, Knights of Pythias, v. England..... 298

Page
Times Pub. Co. v. Carlisle..... 475

Underwood v. Patrick..... 330

Western Coal & Mining Co. v. Berberich 364
World Pub. Co. v. Carlisle..... 475

NINTH CIRCUIT.

Bancroft v. Hambly..... 595
Bowen v. Needless Nat. Bank.... 553

City of Helena v. Mills..... 1

Dunning, In re..... 437

Francis-Valentine Co., In re..... 499

Garrard v. Silver Peak Mines.... 603
G. V. B. Min. Co. v. First Nat. Bank of Hailey 633

Hanson v. Smith..... 581
Howard Ins. Co. of New York v. Silverberg 549

Irvine v. Angus..... 580

McElroy v. British America Assur. Co. of Toronto, Canada..... 615
Merchants' Nat. Bank of Helena, Mont., v. School Dist. No. 8 of Meagher County, Mont..... 432

Northern Pac. Ry. Co. v. McCormick 560

Overweight Counterbalance Elevator Co. v. Improved Order of Red Men's Hall Ass'n of San Francisco 125

Pacific Coast S. S. Co. v. Bancroft-Whitney Co..... 135
Pacific Mill & Mining Co. v. Leete 587
Peters v. United States..... 105

Supreme Lodge Knights of Pythias of the World v. Beck..... 467

United States v. Central Pac. R. Co. 546

Digitized by Google

CASES CITED.

Page

Abraham v. Insurance Co., 40 Fed. 717.... 623
Accommodation Loan & Saving Fund Ass'n v. Stonemetz, 29 Pa. St. 534..... 373
Adams v. Gay, 19 Vt. 358..... 458
Adams Min. Co. v. Senter, 26 Mich. 73, 77 231
Aerkfetz v. Humphreys, 145 U. S. 418, 12 Sup. Ct. 835.....103, 579
Ætna Life Ins. Co. v. France, 91 U. S. 510 673
Agnew v. U. S., 165 U. S. 36, 52, 17 Sup. Ct. 235, 241..... 112
Agricultural Bank v. The Barque Jane, 19 La. 1..... 530
Alabama & G. Mfg. Co. v. Robinson, 6 C. C. A. 79, 56 Fed. 690; 19 C. C. A. 152, 72 Fed. 708.....236, 237
Alcalda v. Morales, 3 Nev. 132..... 552
Alexander v. University, 57 Ind. 466, 476.. 231
Allen v. Power Co., 13 Wash. 307, 309, 43 Pac. 55..... 640
Allen v. Wilson, 28 Fed. 677, 680..... 640
Allison v. Corson, 32 C. C. A. 12, 88 Fed. 581 349
Allison v. McCune, 15 Ohio, 729..... 496
American Cent. Ins. Co. v. McCrea, 8 Lea, 513..... 620
American Fire Ins. Co. v. Bank (Tex. Civ. App.) 30 S. W. 384, 385..... 271
American Surety Co. v. Pauly, 170 U. S. 133, 156, 18 Sup. Ct. 552..... 232
Amis v. Smith, 16 Pet. 303..... 599
Anchor Milling Co. v. Walsh, 108 Mo. 277, 18 S. W. 904..... 146
Anderson v. Kissam, 35 Fed. 699..... 68
Anderson v. Roberts, 18 Johns. 529..... 184
Andes v. Ely, 158 U. S. 312-322, 15 Sup. Ct. 954..... 165
Andrews v. Pond, 13 Pet. 65-78..... 341
Andrews v. Spear, 4 Dill. 472, Fed. Cas. No. 379..... 164
Andrews v. Thum, 15 C. C. A. 67, 67 Fed. 911 36
Angle v. Railway Co., 151 U. S. 1, 14 Sup. Ct. 240.....438, 440
Antelope, The, 1 Ben. 521, Fed. Cas. No. 481 629
Armstrong v. Cooper, 11 Ill. 561, 562..... 274
Aron v. Railway Co., 132 U. S. 84, 10 Sup. Ct. 24..... 36
Ashbury Railway Carriage & Iron Co. v. Riche, L. R. 7 H. L. 653..... 184
Ashley v. Board, 8 C. C. A. 455, 60 Fed. 55 .....165, 168
Ashley v. May, 5 Ark. 408..... 264
Astor v. Wells, 4 Wheat. 466..... 231
Atchison, T. & S. F. R. Co. v. Meyers, 11 C. C. A. 439, 442, 63 Fed. 793..... 368
Atchison, T. & S. F. R. Co. v. Reesman, 9 C. C. A. 20, 60 Fed. 374..... 429
Atlantic A. P. R. Co. v. Laird, 164 U. S. 393, 398, 17 Sup. Ct. 120..... 148

Page

Atlantic Cotton Mills v. Mills, 147 Mass. 268, 17 N. E. 496..... 664
Atlantic Works v. Brady, 107 U. S. 192, 200, 2 Sup. Ct. 225..... 36
Augusta, T. & G. R. Co. v. Kittel, 2 C. C. A. 615, 52 Fed. 63, 73..... 640

Baer v. Insurance Co., 4 Bush, 242..... 620
Bailey v. Sundberg, 1 C. C. A. 387, 49 Fed. 583, 586..... 144
Bailey v. U. S., 109 U. S. 432, 3 Sup. Ct. 272 55
Balbach v. Frelinghuysen, 15 Fed. 675.... 312
Ballard v. McCluskey, 58 Fed. 880..... 389
Baltimore & O. R. Co. v. Baugh, 149 U. S. 368, 13 Sup. Ct. 914.....99, 101
Bangor & P. M. Slate & Slab Co., In re, L. R. 20 Eq. 59..... 190
Banigan v. Bard, 134 U. S. 291, 10 Sup. Ct. 565..... 189
Bank of Columbia v. Patterson's Adm'r, 7 Cranch, 299..... 401
Bank of Middlebury v. Railroad Co., 30 Vt. 159, 170, 171.....640, 643
Bank of New York Nat. Banking Ass'n v. Trust Co., 143 N. Y. 564, 38 N. E. 713, 714 .....68, 668
Bank of United States v. Davis, 2 Hill, 451 664
Barnes v. Gaslight Co., 27 N. J. Eq. 33, 37 232
Barnes v. Railway Co., 4 C. C. A. 199, 54 Fed. 87..... 270
Barney v. City of Keokuk, 94 U. S. 324.. 425
Barnstable, The, 84 Fed. 895..... 200
Barr v. Railroad Co., 125 N. Y. 263, 273, 26 N. E. 145..... 644
Barry v. Railroad Co., 92 N. Y. 289-292.... 363
Bartlett v. Stanchfield, 148 Mass. 394, 19 N. E. 549..... 400
Batchelor v. U. S., 156 U. S. 426, 15 Sup. Ct. 446..... 110
Baumgartel v. Insurance Co., 136 N. Y. 547, 32 N. E. 990..... 675
Baylis v. Lintott, 8 L. R. C. P. 345..... 143
Beal v. City of Somerville, 1 C. C. A. 598, 50 Fed. 647..... 313
Bedford v. Coke, 1 Dick. 181..... 214
Beebe v. Insurance Co., 93 Mich. 514, 53 N. W. 818..... 619
Bell v. Packard, 69 Me. 105..... 550
Beltzhoover Borough v. Beltzhoover's Heirs, 173 Pa. St. 213, 33 Atl. 1047..... 658
Béné v. Jeantet, 129 U. S. 683, 688, 9 Sup. Ct. 428..... 131
Bennett v. Insurance Co., 106 N. Y. 243, 12 N. E. 609..... 625
Bennett v. Salisbury, 24 C. C. A. 329, 331, 78 Fed. 769, 771.....481, 482

Digitized by Google

Page
Bergman v. Bly, 13 C. C. A. 319, 66 Fed. 40 334
Bergman v. Hutcheson, 60 Miss. 872..... 304
Bergman v. Inman, 91 Fed. 293..... 455
Bergmann v. Jones, 94 N. Y. 51, 62..... 482
Bernheimer v. Bryan, 35 C. C. A. 592, 93 Fed. 767..... 502
Bibbins v. Clark, 90 Iowa, 230, 57 N. W. 884, 59 N. W. 290..... 217
Bilbie v. Lumley, 2 East, 469..... 594
Bingham v. Doane, 9 Ohio, 165..... 427
Binkert v. Railway Co., 98 Ill. 205..... 217
Blackburn v. State, 3 Head, 690..... 167
Black Diamond Coal-Min. Co. v. Coal Co., 156 U. S. 611, 618, 15 Sup. Ct. 482..... 131
Blake v. Coal Co., 28 C. C. A. 678, 84 Fed. 1014..... 163
Blakeley v. Ass'n (Tex. Civ. App.) 26 S. W. 292..... 342
Blanchard v. Williamson, 70 Ill. 647, 651 274
Blanchin v. The Fashion, 10 La. Ann. 49 529
Blatch v. Archer, Cowp. 63, 65..... 153
Blease v. Garlington, 92 U. S. 1..... 240
Blitz v. U. S., 153 U. S. 308, 316, 14 Sup. Ct. 924, 925..... 111
Bloomfield v. Buchanan, 13 Or. 108, 8 Pac. 912 601
Blossom v. Insurance Co., 64 N. Y. 162... 675
Blount's Adm'x v. Railway Co., 9 C. C. A. 526, 61 Fed. 375..... 103
Blue v. Bank, 145 Ind. 518, 522, 43 N. E. 655 373
Board of Com'rs Gunnison Co. v. Rollins & Sons, 26 C. C. A. 91, 80 Fed. 692; 173 U. S. 255, 19 Sup. Ct. 390..... 282
Board of Public Works v. College, 17 Wall. 521..... 275
Bogan v. Mortgage Co., 11 C. C. A. 128, 135, 63 Fed. 192, 199..... 229
Botsford v. Murphy, 47 Mich. 536, 537, 11 N. W. 375, 376..... 256
Bowden v. Burnham, 8 C. C. A. 248, 59 Fed. 752..... 455
Bowden v. Johnson, 107 U. S. 251, 2 Sup. Ct. 246..... 586
Bowe v. U. S., 42 Fed. 777..... 400
Boyce v. Grundy, 3 Pet. 215..... 348
Bradley v. Ballard, 55 Ill. 413, 419..... 640
Bradt v. Benedict, 17 N. Y. 93-96..... 192
Brady v. Ass'n, 9 C. C. A. 252, 60 Fed. 727 673
Breeze v. Haley, 11 Colo. 351, 18 Pac. 551 351
Brevard v. Summar, 2 Heisk. 97-105..... 164
Briggs v. Duell, 87 Fed. 479..... 40
Briggs v. Ice Co., 9 App. D. C. 478; 54 Fed. 376; 8 C. C. A. 480, 60 Fed. 87....39-41
Briggs v. Penniman, 8 Cow. 387..... 192
Briggs v. Spaulding, 141 U. S. 132, 147, 11 Sup. Ct. 924..... 410
British Queen Min. Co. v. Silver-Min. Co., 139 U. S. 222, 11 Sup. Ct. 523...416, 417
Brobst v. Brock, 10 Wall. 519..... 238
Bronson's Ex'r v. Chappell, 12 Wall. 681 623
Brooklyn City & N. R. Co. v. Bank, 102 U. S. 14..... 599
Brown v. Insurance Co., 89 Tex. 590, 35 S. W. 1060..... 268
Brown v. Jones, 2 Gall. 477, 481, Fed. Cas. No. 2,017..... 143
Brown v. Mfg. Co., 6 C. C. A. 528, 57 Fed. 731..... 391
Brown v. Piper, 91 U. S. 40..... 40

Page
Brown v. Tillinghast, 35 C. C. A. 323, 93 Fed. 326..... 294
Bryant v. Herbert, 3 C. P. Div. 389..... 14
B. S. Green Co. v. Blodgett, 159 Ill. 169, 174, 42 N. E. 176..... 643
Buck v. Colbath, 3 Wall. 334..... 497
Buckley v. Knapp, 48 Mo. 152, 161....479, 482
Building & Loan Ass'n v. Logan, 14 C. C. A. 133, 66 Fed. 827; (Tex. Civ. App.) 33 S. W. 1088.....341, 342
Bunt v. Mining Co., 138 U. S. 483, 11 Sup. Ct. 464..... 97
Burck v. Taylor, 152 U. S. 648, 14 Sup. Ct. 701 56
Burlington Ins. Co. v. Miller, 8 C. C. A. 612, 614, 60 Fed. 254..... 368
Burlington Water Co. v. Woodward, 49 Iowa, 61..... 3
Burns v. Meyer, 100 U. S. 671..... 38
Burr v. Navigation Co., 1 Wall. 99..... 416
Burrall v. Vanderbilt, 6 Abb. Prac. 70... 553
Burritt v. Insurance Co., 5 Hill (N. Y.) 188 673
Burt v. Newspaper Co., 154 Mass. 238, 244, 28 N. E. 1..... 489
Busell Trimmer Co. v. Stevens, 137 U. S. 423, 11 Sup. Ct. 150..... 36
Bush v. Sherman, 80 Ill. 175..... 227
Butler v. Baily, 2 Bay, 244, 249..... 218
Buttz v. Railroad Co., 119 U. S. 55, 7 Sup. Ct. 100.....571, 572
Butz v. City of Muscatine, 8 Wall. 575... 599
Byers v. McAuley, 149 U. S. 608-618, 13 Sup. Ct. 906..... 163

Cahill v. Railway Co., 20 C. C. A. 186, 74 Fed. 287..... 363
Caledonia, The, 43 Fed. 681, 685; 157 U. S. 124, 130, 137, 15 Sup. Ct. 537.....141, 150
California Nat. Bank v. Kennedy, 167 U. S. 362, 366, 17 Sup. Ct. 831..407, 558, 559, 643
Callahan v. Ingram, 122 Mo. 355, 370-372, 26 S. W. 1020.....479, 482
Calvert v. Stage Co., 25 Or. 412, 36 Pac. 24 640
Camanche, The, 8 Wall. 448, 479..... 206
Campbell v. City of Haverhill, 155 U. S. 610, 618, 15 Sup. Ct. 217..... 333
Campbell v. Insurance Co., 98 Mass. 391.. 673
Campbell v. Sherman, 55 Hun, 609, 8 N. Y. Supp. 630..... 601
Capital Nat. Bank v. Bank (Neb.) 69 N. W. 115..... 434
Carey v. Railway Co., 150 U. S. 171, 14 Sup. Ct. 63..... 304
Carleton v. People, 10 Mich. 250-259..... 167
Carman v. Emerson, 18 C. C. A. 38, 71 Fed. 264..... 288
Carpenter v. Insurance Co., 16 Pet. 495.. 599, 621, 625
Carpey v. Dowdell, 115 Cal. 677, 683, 47 Pac. 695..... 640
Carrier Dove, The, 2 Moore, P. C. (N. S.) 243, Brown & L. 113..... 206
Carrigan v. Improvement Co., 6 Wash. 590, 34 Pac. 148..... 640
Cates v. Allen, 149 U. S. 451, 13 Sup. Ct. 883, 977..... 443
Catholic Bishop of Nesqually v. Gibbon, 158 U. S. 155, 166, 15 Sup. Ct. 779..... 560
Central Bridge Corp. v. Butler, 2 Gray, 132 469

Digitized by Google

Page
Central Transp. Co. v. Palace-Car Co., 139 U. S. 24-59, 11 Sup. Ct. 478, 486, 488 184, 558, 643
Central Trust Co. v. Hubinger, 87 Fed. 3-8 497
Central Trust Co. v. Railroad Co., 87 Fed. 815-828; 110 N. Y. 250, 257, 18 N. E. 92.. 187, 218
Chaffee Co. v. Potter, 142 U. S. 355, 12 Sup. Ct. 216..... 282
Chambers v. Marks, 93 Ala. 412, 9 South. 74 291
Chandler v. Mining Co., 149 U. S. 79, 13 Sup. Ct. 798..... 604
Chapman v. Lumber Co., 32 C. C. A. 402, 89 Fed. 903, 905..... 131
Chase v. Driver, 92 Fed. 780, 34 C. C. A. 668 .....372, 631
Chase v. Roller-Mills Co., 56 Fed. 625.... 455
Chetwood, Ex parte, 165 U. S. 443, 460, 17 Sup. Ct. 385..... 140
Chicago, B. & Q. R. Co. v. Nebraska, 170 U. S. 57, 18 Sup. Ct. 513..... 428
Chicago, R. I. & P. R. Co. v. Houston, 95 U. S. 697.....103, 578
Chicago, St. P., M. & O. Ry. Co. v. Bellinwith, 28 C. C. A. 358, 83 Fed. 437, 440... 231
Chicago, St. P., M. & O. Ry. Co. v. Elliott, 5 C. C. A. 347, 350, 55 Fed. 949, 952.. 454
Chicago & N. W. R. Co. v. Sayles, 97 U. S. 554..... 37
Chiles v. New Haven & N. Co., 133 Mass. 253 422
Christobal Colon, The, 44 Fed. 803..... 521
Christy v. Saddle Co., 87 Fed. 902..... 32
Chrystie v. Foster, 9 C. C. A. 606, 61 Fed. 551 670
Church of Holy Trinity v. U. S., 142 U. S. 457, 460, 12 Sup. Ct. 511..... 267
Citizens' Fire Insurance, Security & Land Co. v. Doll, 35 Md. 89..... 74
City of Chicago v. Robbins, 2 Black, 418 428
City of East St. Louis v. Coke Co., 98 Ill. 415..... 5
City of Erie v. A Piece of Land on Eighteenth Street, 176 Pa. St. 478, 484, 35 Atl. 136 88
City of Greencastle v. Allen, 43 Ind. 347.. 92
City of Hartford, The, 11 Fed. 89..... 633
City of Knoxville v. Africa, 23 C. C. A. 252, 77 Fed. 501..... 425
City of Lincoln v. Street-Light Co., 8 C. C. A. 253, 257, 59 Fed. 756, 760..... 371
City of Memphis v. Brown, 20 Wall. 289, 308, 309..... 262
City of Newton v. Levis, 25 C. C. A. 161, 79 Fed. 715..... 349
City of San Antonio v. Mehaffy, 96 U. S. 314 328
City of Walla Walla v. Water Co., 19 Sup. Ct. 77..... 5
Claassen v. U. S., 142 U. S. 140, 12 Sup. Ct. 169..... 113
Claflin v. Bank, 25 N. Y. 293..... 70
Clark v. Barnwell, 12 How. 272..... 535
Clark v. Com., 29 Pa. St. 129..... 167
Clark v. Hills, 67 Tex. 141, 2 S. W. 356... 469
Clark v. Holmes, 7 Hurl. & N. 937..... 99
Clarke v. Hart, 6 H. L. Cas. 633, 656..... 227
Clayburgh v. City of Chicago, 25 Ill. 535.. 93

Page
Clements v. Maloney, 55 Mo. 352, 359..479, 482
Clifton v. Litchfield, 106 Mass. 34, 40, 41 262, 263
Close v. Cemetery, 107 U. S. 466-477, 2 Sup. Ct. 267..... 165
Cluck v. State, 40 Ind. 263..... 261
Cluverius v. Com., 81 Va. 787, 848..... 117
Coad v. Cattle Co., 32 Neb. 761, 49 N. W. 757 256
Coal Creek Min. Co. v. Davis, 90 Tenn. 711, 18 S. W. 387..... 98
Cobb v. Bennett, 75 Pa. St. 330..... 486
Coblentz v. Mfg. Co., 40 Ark. 180..... 262
Cochran v. U. S., 157 U. S. 286, 290, 293, 15 Sup. Ct. 628.....110, 112
Cockrill v. Cooper, 29 C. C. A. 529, 535, 538, 86 Fed. 7, 12, 16..... 408
Coe v. Cassidy, 72 N. Y. 133, 138..... 256
Colter v. Lower, 35 Ind. 285..... 84
Columbia Nat. Bank v. Mathews, 29 C. C. A. 491, 85 Fed. 934..... 294
Columbia & P. S. R. Co. v. Hawthorne, 144 U. S. 202, 12 Sup. Ct. 591..... 96
Columbus, The, 1 Abb. Adm. 37, Fed. Cas. Nos. 3,041, 3,042.....144, 145
Commercial Bank v. Armstrong, 148 U. S. 50, 58, 13 Sup. Ct. 533.....313, 435
Commercial Bank v. Cunningham, 24 Pick. 270, 276..... 232
Commercial Mut. Marine Ins. Co. v. Insurance Co., 19 How. 318..... 622
Commercial Nat. Bank v. City of Portland, 24 Or. 188, 33 Pac. 532..... 92
Commercial Nat. Bank v. Pirie, 27 C. C. A. 171, 82 Fed. 799..... 556
Com'rs of Douglass County v. Bolles, 94 U. S. 104..... 165
Com'rs of Highways of Warwick v. Judges, 13 Wend. 433..... 474
Com. v. Doran, 14 Gray, 37, 38..... 112
Com. v. Ford, 130 Mass. 64, 66..... 146
Com. v. Merrill, 8 Allen, 545..... 113
Com. v. Railroad Co., 14 Gray, 93; 27 Pa. St. 339..... 426
Compta, The, 4 Sawy. 375, 377, Fed. Cas. No. 3,069.....150, 153
Compton v. Railroad Co., 15 C. C. A. 397, 68 Fed. 263; 45 Ohio St. 592, 16 N. E. 110, 18 N. E. 380.....163, 181
Concordia Savings & Aid Ass'n v. Read, 93 N. Y. 474..... 342
Congreve v. Smith, 18 N. Y. 79..... 427
Connemara, The, 108 U. S. 359, 2 Sup. Ct. 754 205
Conqueror, The, 166 U. S. 111, 131, 17 Sup. Ct. 510..... 130
Consolidated Car Heating Co. v. Heating Corp., 82 Fed. 993, 997; 29 C. C. A. 386, 85 Fed. 662, 665..... 29
Continental Ins. Co. v. Pearce, 39 Kan. 396, 18 Pac. 291.....622, 623
Continental Trust Co. v. Railroad Co., 32 C. C. A. 44, 87 Fed. 133..... 164
Cooper v. Jackson, 4 Wis. 538..... 550
Cooper v. Newell, 19 Sup. Ct. 506..... 498
Cooper v. Reynolds, 10 Wall. 308, 316.... 140
Coover v. Johnson, 86 Mo. 533..... 488
Corcoran v. Cattle Co., 151 Mass. 74, 23 N. E. 727..... 664
Corning Tunnel Co. v. Pell, 4 Colo. 184.... 264

Digitized by Google

Page
Corn-Planter Patent, 23 Wall. 181, 224.. 128
Cort v. Insurance Co., 2 Wash. C. C. 375, Fed. Cas. No. 3,257..... 150
Coupe v. Royer, 155 U. S. 565, 15 Sup. Ct. 199 128
Courthope v. Mapplesden, 10 Ves. 290..... 349
Covert v. Sargent, 38 Fed. 237..... 133
Cox v. Bruce, 18 Q. B. Div. 147, 152..... 44
Craft v. Stoutz, 95 Ala. 245, 10 South. 647 514
Cragin v. Lovell, 109 U. S. 194, 3 Sup. Ct. 132 332
Crain v. Kennedy, 85 Ill. 340..... 274
Cramer v. Bird, L. R. 6 Eq. 143-147..... 193
Cramer v. Fry, 68 Fed. 201, 212..... 131
Creamer v. Bowers, 35 Fed. 209..... 133
Crescent City Live Stock Co. v. Landing Co., 120 U. S. 141, 146-149, 159, 7 Sup. Ct. 472.....79, 80, 83
Crescent City Nat. Bank v. Case, 99 U. S. 628..... 586
Crow v. Lumber Co., 16 C. C. A. 127, 69 Fed. 61..... 262
Crowley v. Mining Co., 55 Cal. 273, 275.. 640
Crown v. Orr, 140 N. Y. 450, 35 N. E. 648 98
Cunningham v. Fourth Baptist Church, 159 Pa. St. 620, 28 Atl. 490..... 400
Cunningham v. Patrick, 136 Mo. 621, 37 S. W. 817..... 594
Cushing v. Seymour, 30 Minn. 301, 306, 15 N. W. 249..... 256
Cutting, Ex parte, 94 U. S. 14..... 194

Dallas Co. v. Huidekoper, 154 U. S. 654, 14 Sup. Ct. 1190..... 165
Daniels v. Bank, 92 Hun, 460, 38 N. Y. Supp. 580..... 665
Darry v. People, 10 N. Y. 120, 139..... 479
Davenport v. Kleinschmidt, 6 Mont. 502, 13 Pac. 249..... 2-4
Davenport v. Paris, 136 U. S. 580, 10 Sup. Ct. 1064..... 417
Davidson v. Cornell, 132 N. Y. 228, 30 N. E. 573..... 98
Davis v. Anderson, 1 Ga. 176..... 238
Davis v. Bohle, 34 C. C. A. 372, 92 Fed. 325..... 268
Davis v. Palmer, 2 Brock, 309, Fed. Cas. No. 3,645..... 390
Davis v. Trust Co., 152 U. S. 590, 14 Sup. Ct. 693..... 652
Davis' Adm'r v. Weibbold, 139 U. S. 507, 11 Sup. Ct. 628..... 610
Davis Improved Wrought Iron Wagon Wheel Co. v. Wagon Co., 20 Fed. 602, 699 232
Day v. Woodworth, 13 How. 363, 370, 371 481, 482
Dean v. Davis, 51 Cal. 411, 416..... 420
Delaware, L. & W. R. Co. v. Converse, 139 U. S. 469, 11 Sup. Ct. 569..... 103
De Loriea v. Whitney, 11 C. C. A. 355, 63 Fed. 611, 617, 620.....129, 131
Dennis v. Eckhardt, 3 Grant, Cas. 392.... 427
Denny v. Faulkner, 22 Kan. 75, 83..... 256
Denver Fire Ins. Co. v. McClelland, 9 Colo. 11, 9 Pac. 771..... 556
Denver, S. P. & P. R. Co. v. Moynahan, 8 Colo. 56, 5 Pac. 811..... 213
Denver & R. G. Ry. Co. v. Harris, 122 U. S. 597, 608, 7 Sup. Ct. 1286.....49, 487

Page
Denver & R. G. Ry. Co. v. Henderson, 10 Colo. 1, 13 Pac. 910..... 362
Dexter v. Collins, 21 Colo. 455, 42 Pac. 664 213
Dickerson v. Colgrove, 100 U. S. 578..... 594
Dietz v. Lymer, 10 C. C. A. 71, 61 Fed. 792 261
Dillon v. Railway Co., 3 Dill. 319, 7 Fed. Cas. 718 (No. 3,916)..... 97
Dismukes v. Halpern, 47 Ark. 317, 1 S. W. 554 334
District of Columbia v. McElligott, 117 U. S. 621, 6 Sup. Ct. 884..... 100
Doe v. Transportation Co., 78 Fed. 62, 67 373
Dolan v. Jennings, 139 U. S. 385, 11 Sup. Ct. 584..... 653
Donley v. Dougherty, 174 Ill. 582, 51 N. E. 714..... 100
Donovan v. Campion, 29 C. C. A. 30, 31, 85 Fed. 71, 72..... 258
Doolan v. Carr, 125 U. S. 618, 8 Sup. Ct. 1228 610
Dooley v. Hadden, 20 C. C. A. 494, 74 Fed. 429 340
Doran v. Flood, 47 Fed. 543..... 428
Dowling v. Polack, 18 Cal. 626..... 264
Dowling v. The Reliance, 1 Woods, 284, Fed. Cas. No. 4,042..... 531
Duer v. James, 42 Md. 492..... 550
Duff v. Pump Co., 107 U. S. 636, 2 Sup. Ct. 487..... 37
Dugan v. Lewis, 79 Tex. 246, 14 S. W. 1024 341
Duncan v. Nicholls, 44 Fed. 302..... 397
Dunham v. Mfg. Co., 154 U. S. 103, 14 Sup. Ct. 986..... 123
Dunlap v. Gallatin Co., 15 Ill. 7, 9..... 218
Dunning v. West, 66 Ill. 366, 367..... 372
Dupasseur v. Rochereau, 21 Wall. 135.... 83
Durant Min. Co. v. Mining Co., 93 Fed. 166, 35 C. C. A. 252..... 480
Dutcher v. Hobby, 86 Ga. 193, 12 S. E. 356 238
Duval v. Duval, 153 Ill. 49, 53, 38 N. E. 944 274
Duvall's Ex'r v. Darby, 38 Pa. St. 56..... 84
Dynen v. Leach, 26 Law J. Exch. 221..... 101

Eastern Transp. Line v. Hope, 95 U. S. 297 368
Eastman v. Thayer, 60 N. H. 408, 418..218, 219
Edler v. Hasche, 67 Wis. 653, 31 N. W. 57 496
Edson v. Cumings, 52 Mich. 52, 17 N. W. 693 304
Edwin I. Morrison, The, 153 U. S. 199, 210, 14 Sup. Ct. 823.....150, 154
E. L. Cain, The, 45 Fed. 367..... 140
Eldridge v. Trezevant, 160 U. S. 452, 16 Sup. Ct. 345..... 420
Elizabeth v. Pavement Co., 97 U. S. 126-137 391
Elliott v. Railway Co., 150 U. S. 245, 14 Sup. Ct. 85.....103, 578, 579
Elmore v. Com'rs, 135 Ill. 269, 25 N. E. 1010 420
Embry v. Palmer, 107 U. S. 3, 2 Sup. Ct. 25 83
Engleman v. State, 2 Ind. 91, 93..... 112
Erhardt v. Boaro, 113 U. S. 537, 5 Sup. Ct. 565..... 349
Espey v. Lake, 10 Hare, 260, 264..... 403
Estis v. Trabue, 128 U. S. 225, 9 Sup. Ct. 58 653

Digitized by Google

Page
Eureka Co. v. Bailey Co., 11 Wall. 488, 491 643
Evans v. Fertilizing Co., 160 Pa. St. 209, 28 Atl. 702 427
Evans v. Harvester Works, 63 Iowa, 204, 18 N. W. 881 257
Evans v. Ross (Cal.) 8 Pac. 88 349
Evans v. U. S., 153 U. S. 584, 587, 588, 595, 609, 14 Sup. Ct. 934, 939 113
Evansville Bank v. Bank, 155 U. S. 564, 15 Sup. Ct. 221 313
Ewing v. Altmeyer, 15 La. Ann. 416 252

Fairbanks v. Long, 91 Mo. 628, 633, 4 S. W. 499 372
Farmers' Loan & Trust Co. v. Railroad Co., 67 Fed. 49; 163 U. S. 31, 44, 16 Sup. Ct. 917, 922 ..... 165, 439
Farmers' & Mechanics' Bank v. Bank, 16 N. Y. 125 555
Farmers' & Merchants' Nat. Bank v. Smith's Ex'r, 23 C. C. A. 80, 87, 77 Fed. 129, 137 407
Fay v. Cordesman, 109 U. S. 408, 420, 421, 3 Sup. Ct. 236 129
Fay v. Noble, 12 Cush. 1, 17 640
F. C. Austin Mfg. Co. v. Johnson, 32 C. C. A. 309, 89 Fed. 677 358
Feely v. Cordage Co., 161 Mass. 426, 37 N. E. 368 101
Felton v. Aubrey, 20 C. C. A. 445, 74 Fed. 359 363
Fidelity & Casualty Co. v. Egbert, 28 C. C. A. 281, 84 Fed. 644 625
Filmore v. Reithman, 6 Colo. 120, 131 409
Fire Ins. Ass'n v. Wickham, 141 U. S. 564, 12 Sup. Ct. 84 622
Fireman's Fund Ins. Co. v. Norwood, 16 C. C. A. 136, 69 Fed. 71 621
First Nat. Bank v. Babbidge, 160 Mass. 563, 36 N. E. 462 664
First Nat. Bank v. Blake, 60 Fed. 78 664
First Nat. Bank v. Christopher, 40 N. J. Law, 435 664
First Nat. Bank v. Dunbar, 118 Ill. 625, 9 N. E. 186 664
First Nat. Bank v. Graham, 100 U. S. 699, 702 487
First Nat. Bank of New Milford v. New Milford, 36 Conn. 93 664
Fisher v. Hall, 41 N. Y. 416 550
Fitzgerald & Mallory Const. Co. v. Fitzgerald, 137 U. S. 98, 109, 11 Sup. Ct. 36 640
Fitzsimmons v. Express Co., 40 Ga. 330, 336 231
Flannigan v. Bank, 56 Fed. 959 559
Fleming v. Railway Co., 4 Q. B. Div. 81, 83 149
Fletcher v. City of Oshkosh, 18 Wis. 228 92
Fletcher v. Railroad Co., 25 Wend. 462 427
Fogg v. Blair, 139 U. S. 118-126, 11 Sup. Ct. 476-478 174
Fogg v. Insurance Co., 10 Cush. 337 74
Foland v. Town of Frankton, 142 Ind. 546, 41 N. E. 1031 5
Folden v. State, 13 Neb. 328, 332, 14 N. W. 412 116
Fond du Lac Co. v. May, 137 U. S. 395, 403, 11 Sup. Ct. 98 131
Forbes v. Hagman, 75 Va. 168 83
Ford v. Hill (Wis.) 66 N. W. 115, 118 643
Forst v. Leonard (Ala.) 22 South. 481 551

Page
Fosdick v. Schall, 99 U. S. 235 ..... 245, 247, 543
Foster v. City of Alton, 173 Ill. 587, 51 N. E. 76 93
Foster v. Wooten, 67 Miss. 540, 7 South. 501 458
Fotheringham v. Express Co., 36 Fed. 252 49
Fourth Nat. Bank of St. Louis v. City of Belleville, 27 C. C. A. 674, 83 Fed. 675 90
Frasher v. O'Connor, 115 U. S. 102, 5 Sup. Ct. 1141 604
Fred J. Kiesel & Co. v. Insurance Office, 31 C. C. A. 515, 88 Fed. 246 270
Freedom, The, L. R. 3 P. C. 594 633
Freeland v. Dazey, 25 Ill. 294, 297 274
Freeman, The, 18 How. 182, 191 ..... 42, 43
Frenkel v. Hudson, 82 Ala. 158, 2 South. 758 232
Frick v. Railway Co., 75 Mo. 595, 610 363
Fusilier, The, 3 Moore, P. C. (N. S.) 51; Brown & L. 341 206
Fussell v. Gregg, 113 U. S. 550, 565, 5 Sup. Ct. 639 566

Gails v. The Osceola, 14 La. Ann. 544 529
Galliher v. Cadwell, 145 U. S. 368, 373, 12 Sup. Ct. 873 226
Galway v. Railroad Co., 128 N. Y. 132, 145, 28 N. E. 479 349
Garabaldi v. Wright, 52 Ark. 416, 12 S. W. 875 497
Gardner v. Railroad Co., 150 U. S. 349, 14 Sup. Ct. 140 578
Garrard v. Silver Peak Mines, 82 Fed. 578 603
Gates v. Bucki, 4 C. C. A. 116, 53 Fed. 961 497
Genesee Nat. Bank v. Whitney, 103 U. S. 99-103 187
George v. Railway Co., 44 Fed. 117, 119 218
Georgia S. & F. R. Co. v. Barton, 28 S. E. 842 245
Georgia S. & F. R. Co. v. Deposit Co., 94 Ga. 306, 21 S. E. 701 244
Germania Ins. Co. of New York v. Rudwig, 80 Ky. 223-234 673
Germania Safety-Vault & Trust Co. v. Boynton, 19 C. C. A. 118, 71 Fed. 797 184
German Ins. Co. v. Gray, 43 Kan. 497, 23 Pac. 637 622
Giddings v. Insurance Co., 90 Mo. 272, 2 S. W. 139 625
Gifford v. Callaway, 8 Colo. App. 359, 46 Pac. 626 218
Gledney v. Deavors, 8 Ga. 479, 481, 482 218
Glendale, The, 26 C. C. A. 500, 81 Fed. 633, 635 397
Glenn v. Fant, 134 U. S. 398, 10 Sup. Ct. 583 417
Glide, The, 167 U. S. 610, 17 Sup. Ct. 930 ..... 143, 401
Godden v. Kimmell, 99 U. S. 201 226
Godfrey v. Watson, 3 Atk. 517 214
Gold Min. Co. v. Bank, 96 U. S. 640 401
Gooding v. Shea, 103 Mass. 360 496
Goodman v. Kopperl, 169 Ill. 136, 48 N. E. 172 274
Goodman v. Niblack, 102 U. S. 560 55
Goodrich v. City of Detroit, 12 Mich. 279 92
Gordon's Ex'rs v. Railroad Co., 78 Va. 501 190
Gormley v. Bunyan, 138 U. S. 623, 11 Sup. Ct. 453 341
Goshen Nat. Bank v. State, 141 N. Y. 179, 36 N. E. 316 ..... 68, 69

Digitized by Google

Page
Gowen v. Harley, 6 C. C. A. 190, 56 Fed. 973 99
Graham v. Graham's Ex'rs, 34 Pa. St. 475 104, 105
Graham v. Railroad Co., 102 U. S. 148.. 177, 187
Grand Trunk Ry. Co. v. Ives, 144 U. S. 408, 433, 12 Sup. Ct. 679..... 368
Grant v. City of Davenport, 36 Iowa, 396.. 5
Grant v. Fiol, 17 La. 158..... 530
Grant v. Norway, 10 C. B. 665, 688, 689..43, 44
Grant v. Walter, 148 U. S. 547, 13 Sup. Ct. 699..... 36
Grant Chute v. Winegar, 15 Wall. 355..... 475
Gravel v. Clough, 81 Iowa, 272, 276, 46 N. W. 1092..... 256
Gray v. Blum, 55 N. J. Eq. 553, 38 Atl. 646 675
Greeley v. Bank, 98 Mo. 458, 460, 11 S. W. 980 218
Green v. Kemp, 13 Mass. 515..... 186
Green v. Liter, 8 Cranch, 106..... 459
Green v. Railroad Co., 24 S. E. 814....245, 246
Green v. Terwilliger, 56 Fed. 384, 394..... 131
Greene, In re, 52 Fed. 104..... 109
Greene v. Railway Co., 31 Minn. 248, 17 N. W. 378..... 99
Greenpoint Sugar Co. v. Whitin, 69 N. Y. 328, 333.....641, 642
Gregory v. Pike, 25 C. C. A. 48, 79 Fed. 520 300
Gribble v. Brewing Co., 100 Cal. 67, 71, 34 Pac. 527..... 640
Gridley v. Railway Co., 71 Ill. 200, 203.. 373
Grimm v. People, 14 Mich. 301, 308..... 116
Gristock v. Insurance Co., 87 Mich. 428, 49 N. W. 634..... 625
Gulf, C. & S. F. R. Co. v. Ellis, 4 C. C. A. 454, 54 Fed. 481, 483..... 153
Gulf, C. & S. F. R. Co. v. Washington, 1 C. C. A. 286, 49 Fed. 347..... 362
Gulnare, The, 42 Fed. 861..... 150
Gumbel v. Pitkin, 124 U. S. 131-156, 8 Sup. Ct. 379..... 163
Gunster v. Power Co., 181 Pa. St. 327, 37 Atl. 550..... 664
Gutwillig, The, 90 Fed. 475; 34 C. C. A. 377, 92 Fed. 337..... 431

Haas v. Insurance Co. (Sup.) 1 N. Y. Supp. 895..... 622
Hague v. City of Philadelphia, 48 Pa. St. 527 88
Hales v. Holland, 92 Ill. 494, 497, 498..... 274
Haley v. Elliott, 16 Colo. 159, 26 Pac. 559; 20 Colo. 379, 38 Pac. 771.....351, 352
Hall v. Railway Co., 13 Wall. 367, 370, 372 146, 150
Hall v. State, 3 Ga. 18, 22..... 112
Hamblin v. Land Co., 147 U. S. 531, 13 Sup. Ct. 353..... 572
Hambly v. Bancroft, 83 Fed. 444..... 597
Hamilton v. Brown, 3 C. C. A. 639, 53 Fed. 753..... 553
Hamilton v. Eno, 81 N. Y. 126..... 480
Hamlin v. Trust Co., 24 C. C. A. 271, 78 Fed. 664.....189, 194
Hammond v. Winchester, 82 Ala. 470, 2 South. 892..... 349
Hanifen v. Godshalk Co., 28 C. C. A. 507, 84 Fed. 649..... 28

Page
Hanna v. Insurance Co., 150 N. Y. 526, 44 N. E. 1099..... 469
Hanover Nat. Bank v. Trust Co., 148 N. Y. 612, 43 N. E. 72.....68, 70
Hardee v. Wilson, 146 U. S. 179, 13 Sup. Ct. 39..... 653
Hardin v. Cass Co., 42 Fed. 652..... 459
Harding v. Shepard, 107 Ill. 264, 273..... 274
Hardy, Ex parte, 68 Ala. 303..... 517
Harmon v. Bank, 172 U. S. 644, 19 Sup. Ct. 877..... 587
Harmon v. Railroad Co., 87 Tenn. 614, 11 S. W. 703..... 426
Harris v. Douglas, 64 Ill. 466, 468, 469..... 274
Hart v. Respess, 89 Ga. 87, 14 S. E. 910.. 239
Hastings v. Ames, 15 C. C. A. 628, 68 Fed. 726 553
Hatch v. Bates, 54 Me. 136..... 550
Hawley v. Foote, 19 Wend. 516..... 263
Hayden v. Mfg. Co., 29 Conn. 548..... 523
Hayden v. Thompson, 17 C. C. A. 592, 594, 601, 71 Fed. 60, 62, 69.....407, 410
Hayes v. Railroad Co., 111 U. S. 228, 235, 236, 4 Sup. Ct. 369.....427-429
Haytian Republic, The, 57 Fed. 508, 509; 154 U. S. 118, 14 Sup. Ct. 992..... 629
Heap v. Mills, 27 C. C. A. 316, 82 Fed. 449, 452 28
Heath v. Halle (S. C.) 24 S. E. 300..... 496
Heebner v. Townsend, 8 Abb. Prac. 234.. 553
Heeg v. Licht, 80 N. Y. 579..... 427
Heinemann v. Heard, 62 N. Y. 455..... 469
Hennessy v. Insurance Co., 28 Hun, 98... 22
Henning v. Insurance Co., 2 Dill. 26, Fed. Cas. No. 6,366..... 622
Herman v. Theurer, 11 La. Ann. 70..... 252
Hero, The, Brown & L. 447..... 633
Herring v. Gage, 3 Ban. & A. 396, 402, Fed. Cas. No. 6,422..... 29
Hersee v. Porter, 100 N. Y. 403, 409, 411, 3 N. E. 338..... 219
Hesper, The, 18 Fed. 696..... 206
Hetzel v. Railroad Co., 169 U. S. 26, 18 Sup. Ct. 255..... 427
Heustis v. Johnson, 84 Ill. 61..... 274
Hewitt v. Pioneer-Press Co., 23 Minn. 178 489
Heydenfeldt v. Mining Co., 93 U. S. 634.. 267
Hickory v. U. S., 151 U. S. 303, 309, 14 Sup. Ct. 334, 336..... 121
Higgie v. American Lloyds, 14 Fed. 143, 147 150
Hill v. Boat Co., 2 Rob. (La.) 35, 36..... 530
Hill v. Wooster, 132 U. S. 693, 701, 10 Sup. Ct. 228, 231..... 36
Hills v. Bailey, 27 Vt. 548..... 601
Hilton v. Dickinson, 108 U. S. 166, 2 Sup. Ct. 424..... 458
Hitchcock v. Galveston, 96 U. S. 341, 351 557
Hobart v. Drogan, 10 Pet. 108, 119..... 206
Hobbs v. McLean, 117 U. S. 576, 6 Sup. Ct. 874 55
Hoge v. Magnes, 29 C. C. A. 564, 85 Fed. 355 298
Holbrook v. Holbrook, 32 La. Ann. 13.... 253
Holden v. Bank, 72 N. Y. 286..... 664
Hollins v. Iron Co., 150 U. S. 371, 378, 14 Sup. Ct. 127..... 443
Hollister v. Mfg. Co., 113 U. S. 59, 5 Sup. Ct. 717..... 36
Holmes v. Braidwood, 82 Mo. 610, 617.... 372

Digitized by Google

Page

Holmes v. Jones, 121 N. Y. 461, 467, 24 N. E. 701; 147 N. Y. 59, 61, 67, 41 N. E. 409 482
Hope Min. Co., In re, 1 Sawy. 710, Fed. Cas. No. 6,681 679
Hough v. Railway Co., 100 U. S. 213, 225.. 99
Houghton v. Page, 2 N. H. 42 212
Hovey v. Elliott, 167 U. S. 409, 17 Sup. Ct. 841 632
Howard v. Thompson, 1 Am. Lead. Cas. 200, 213 79
Hoyt v. Horne, 145 U. S. 302-308, 12 Sup. Ct. 922 391
Huff v. Bennett, 6 N. Y. 337, 339 146
Hughes v. Brown, 88 Tenn. 578, 18 S. W. 286 410
Hughes v. U. S., 4 Wall. 232 264
Humiston v. Wood, 124 U. S. 12, 8 Sup. 347 128
Hunt v. The Cleveland, 6 McLean, 76, Fed. Cas. No. 6,885 150
Hunt v. Patchin, 35 Fed. 816, 819, 820 226
Hunt v. Rousmanier's Adm'rs, 8 Wheat. 174 622
Hussner v. Railroad Co., 114 N. Y. 433, 21 N. E. 1002 425
Hyde v. Culver, 4 La. Ann. 9, 10 530
Hyde v. Goodnow, 3 N. Y. 266 674

Illinois Pneumatic Gas Co. v. Berry, 113 U. S. 322, 327, 5 Sup. Ct. 525 401
Illinois Steel Co. v. Mann, 170 Ill. 200, 48 N. E. 417 ..... 100, 101
Illinois Trust & Savings Bank v. City of Arkansas City, 22 C. C. A. 171, 76 Fed. 271 594
Illinois Trust & Savings Bank v. Railway Co., 117 Cal. 332, 346, 49 Pac. 197, 202 640
Imhauser v. Buerk, 101 U. S. 647 378
Imperial Fire Ins. Co. v. Coos Co., 151 U. S. 452, 463, 14 Sup. Ct. 379 270
Indianapolis & St. L. R. Co. v. Watson, 114 Ind. 20, 27, 14 N. E. 721, 15 N. E. 824 99
Inhabitants of Springfield v. Railroad Co., 4 Cush. 63 426
Innerarity v. Bank, 139 Mass. 332, 1 N. E. 282 664
Iron Mountain R. Co. v. Bingham, 87 Tenn. 522, 11 S. W. 705 426
Irvin v. State, 19 Fla. 872, 891 117

Jack v. McKee, 9 Pa. St. 240 ..... 104, 105
Jacksonville, M. P. Ry. & Nav. Co. v. Hooper, 160 U. S. 514, 518, 16 Sup. Ct. 379 ..... 558, 643
Jacobs v. Hawkins, 63 Tex. 3 342
James B. Clow & Sons v. Boltz, 34 C. C. A. 550, 92 Fed. 572 102
James Dalzell's Son & Co. v. The Daniel Kaine, 31 Fed. 748 46
Jarvis v. Peck, 19 Wis. 74 218
Jefferson City v. Opel, 67 Mo. 394 261
Jeffries v. Com., 12 Allen, 145, 154 116
Jeffries v. Insurance Co., 22 Wall. 47 673
Jensen v. Norton, 12 C. C. A. 608, 64 Fed. 662 349
Jerome v. Ross, 7 Johns. Ch. 315 349
J. E. Rumbell, The, 148 U. S. 1, 12, 13 Sup. Ct. 498, 500 ..... 143, 401

Page

Johnson, Ex parte, 167 U. S. 120, 125, 17 Sup. Ct. 735 140
Johnson v. Insurance Co., 46 Neb. 480, 490, 64 N. W. 1110 640
Johnston v. Crawley, 25 Ga. 316, 326 642
Johnston v. Johansen, 30 C. C. A. 675, 86 Fed. 886 520
Johnston v. Mining Co., 148 U. S. 370, 371, 13 Sup. Ct. 585 227
John T. Moore, The, 3 Woods, 61, 68, Fed. Cas. No. 7,430 531
Jones v. Insurance Co., 38 Fed. 19, 21 268
Jones v. Morrison, 31 Minn. 140, 147, 16 N. W. 854 372
Jourolmon v. Ewing, 26 C. C. A. 23, 27, 80 Fed. 604, 607 409
Joy v. City of St. Louis, 138 U. S. 42, 11 Sup. Ct. 243 428

Kansas City, Ft. S. & M. R. Co. v. Cook, 13 C. C. A. 95, 66 Fed. 115 103
Kansas City Min. & Mill. Co. v. Clay (Ariz.) 29 Pac. 9 608
Kate, The, 164 U. S. 470, 17 Sup. Ct. 135 ... 401
Kauss v. Rohner, 172 Pa. St. 481, 33 Atl. 1016 105
Keihl v. City of South Bend, 22 C. C. A. 618, 76 Fed. 921 5
Kelley v. Boettcher, 29 C. C. A. 14, 21, 85 Fed. 55, 62 ..... 229, 411
Kelley-Goodfellow Shoe Co. v. Insurance Co. (Tex. Civ. App.) 28 S. W. 1027, 1031 271
Kellum v. Emerson, 2 Curt. 79, 83, Fed. Cas. No. 7,669 531
Kempner v. Comer, 73 Tex. 202, 11 S. W. 196 342
Kennedy v. Moore, 91 Iowa, 39, 43, 58 N. W. 1066 257
Kennedy v. Railroad Co., 145 N. Y. 288, 39 N. E. 956 98
Kennon v. Gilmer, 131 U. S. 28, 9 Sup. Ct. 697 50
Kent v. Mining Co., 78 N. Y. 159-187 189
Kenton Ins. Co. v. Shea, 6 Bush, 174 620
Kerby-Denis Co., In re, 94 Fed. 818 678
Key City, The, 14 Wall. 653, 659 143
Keyes v. Grant, 118 U. S. 36, 6 Sup. Ct. 974 128
Keystone Bridge Co. v. Iron Co., 95 U. S. 274 391
Key West v. Baer, 13 C. C. A. 572, 66 Fed. 440 416
Kilpatrick v. Bridge Co., 49 Pa. St. 118, 121 373
King v. Root, 4 Wend. 127 480
Kingman & Co. v. Mfg. Co., 34 C. C. A. 489, 92 Fed. 486 256
Kinne v. Webb, 4 C. C. A. 170, 54 Fed. 34 236
Kister v. Insurance Co., 128 Pa. St. 553, 18 Atl. 447 625
Klein v. City of Seattle, 23 C. C. A. 114, 77 Fed. 200 35
Knapp v. Morss, 150 U. S. 221, 228, 229, 14 Sup. Ct. 81 129
Kneeland v. Loan Co., 10 Sup. Ct. 950 245
Knight v. Ass'n, 142 U. S. 161, 12 Sup. Ct. 258 610
Knight v. Ogden, 3 Coop. 409 165
Knight v. Railway Co., 9 C. C. A. 376, 61 Fed. 87, 91 80

Digitized by Google

Page
Kohn v. McNulta, 147 U. S. 238, 241, 13 Sup. Ct. 298.....97, 101
Kountze v. Hotel Co., 107 U. S. 378, 2 Sup. Ct. 911..... 247
Krippendorf v. Hyde, 110 U. S. 276, 4 Sup. Ct. 27..... 163

Lacassagne v. Chapuis, 144 U. S. 119, 126, 12 Sup. Ct. 659..... 443
Laclede Gaslight Co. v. Murphy, 170 U. S. 78, 18 Sup. Ct. 505..... 428
Lafayette & I. Ry. Co. v. Adams, 26 Ind. 78 496
Lagonda Nat. Bank v. Portner, 46 Ohio St. 381-384, 21 N. E. 634..... 186
Laird v. City of De Soto, 22 Fed. 422..... 328
Lake Shore & M. S. Ry. Co. v. Prentice, 147 U. S. 101, 109, 13 Sup. Ct. 261..... 487
Lamberton v. Insurance Co., 39 Minn. 129, 39 N. W. 76..... 623
Landmann v. Insurance Co., 18 Ins. Law J. (La.) 813, 815..... 271
Lane v. Holmes, 55 Minn. 379, 57 N. W. 132 238
Lane v. Townsend, Ware, 289, Fed. Cas. No. 8,054..... 633
Lane v. Vick, 3 How. 464..... 599
Langdon Cheves, The, 2 Mason, 58, Fed. Cas. No. 8,063..... 629
Largen v. State, 76 Tex. 323, 13 S. W. 161 327
Lawrence v. Bassett, 5 Allen, 140..... 550
Lawrence v. Com., 30 Grat. 845, 851..... 117
Lawton v. Com'rs, 2 Caines, 179..... 474
Leavenworth, L. & G. R. Co. v. U. S., 92 U. S. 733, 748..... 566
Ledbetter v. U. S., 170 U. S. 606, 610, 18 Sup. Ct. 774..... 109
Lee v. Bowman, 55 Mo. 400..... 488
Lee v. Creditors, 2 La. Ann. 599..... 529
Lee v. Mining Co., 56 How. Prac. 373.... 640
Lee v. Watson, 1 Wall. 339..... 458
Leekins v. Nordyke & Marmon Co., 66 Iowa, 471, 475, 24 N. W. 1..... 231
Legge v. Tucker, 1 Hurl. & N. 500..... 148
Lehigh Co. v. Kleckner, 5 Watts & S. 181 88
Lehnbeuter v. Holthaus, 105 U. S. 94.... 30
Lehnen v. Dickson, 148 U. S. 71-73, 77, 13 Sup. Ct. 481.....90, 298, 417
Le Lay v. Railway Co., 105 Mo. 361, 16 S. W. 1049..... 363
Lemoine v. Dunklin Co., 2 C. C. A. 343, 51 Fed. 487..... 226
Leon v. Galceran, 11 Wall. 185, 189..... 141
Levinski v. Banking Co., 34 C. C. A. 452, 92 Fed. 449..... 459
Lewin v. Uzuber, 65 Md. 341, 344, 4 Atl. 285 84
Lewis v. U. S., 146 U. S. 370, 372, 13 Sup. Ct. 136 116
Little Miami R. Co. v. Naylor, 2 Ohio St. 235 .....425, 426
Liverpool Ins. Co. v. Massachusetts, 10 Wall. 576..... 420
Liverpool & G. W. Steam Co. v. Insurance Co., 129 U. S. 397, 9 Sup. Ct. 469, 471. .....142, 146, 599
Lofland v. Coward, 12 Heisk. 546..... 165
Logan County Nat. Bank v. Townsend, 139 U. S. 67, 73, 11 Sup. Ct. 496..... 407
London, B. & S. C. Ry. Co. v. Truman, 11 App. Cas. 45..... 428
Long v. Fox, 100 Ill. 43, 50..... 372

Page
Loring v. Brodie, 134 Mass. 453..... 664
Lottawanna, The, 21 Wall. 568..... 401
Louisiana v. Wood, 102 U. S. 294..... 557
Louisville Trust Co. v. City of Cincinnati, 22 C. C. A. 534, 78 Fed. 307..... 428
Louisville Trust Co. v. Railroad Co., 22 C. C. A. 378, 75 Fed. 433; 19 Sup. Ct. 817 187
Louisville & N. R. Co. v. Gower, 85 Tenn. 465, 3 S. W. 824..... 98
Louisville & N. R. Co. v. Kemper, 147 Ind. 561, 47 N. E. 214..... 101
Ludvig Holberg, The, 43 Fed. 120..... 397
Lumley v. Railroad Co., 22 C. C. A. 60, 76 Fed. 66..... 163
Lydian Monarch, The, 23 Fed. 298..... 150

McClain v. Ortmayer, 141 U. S. 419, 12 Sup. Ct. 76..... 35
McClelland v. Bishop, 42 Ohio St. 113..... 291
McCluny v. Silliman, 3 Pet. 270..... 333
McCormick v. Bank, 165 U. S. 538, 17 Sup. Ct. 433..... 558
McCormick v. Talcott, 20 How. 402, 405.. 129
McCormick Harvesting Mach. Co. v. C. Aultman & Co., 16 C. C. A. 259, 69 Fed. 371 391
McCracken v. Robison, 6 C. C. A. 400, 57 Fed. 375, 377..... 644
McCrerry v. Haskell, 119 U. S. 327, 7 Sup. Ct. 176..... 604
McDonald v. Railway Co., 20 C. C. A. 322, 74 Fed. 104.....428, 429
McDonald v. Whitney, 24 Fed. 600..... 389
McElmoyle v. Cohen, 13 Pet. 312..... 333
McFarlan Carriage Co. v. Potter (Ind. Sup.) 52 N. E. 209..... 100
McGlynn v. Brodie, 31 Cal. 380..... 523
McGregor v. Insurance Co., 33 N. J. Eq. 181 190
McIntyre v. Giblin, 131 U. S. clxxiv., 9 Sup. Ct. 698..... 50
McKay v. Green, 3 Johns. Ch. 56..... 274
McKinley v. Williams, 20 C. C. A. 312, 74 Fed. 94..... 232
Macknet v. City of Newark, 42 N. J. Law, 38 218
McLean v. Fleming, L. R. 2 H. L. Sc. 128, 130.....43, 44
McNutt v. Insurance Co. (Tenn. Ch. App.) 45 S. W. 61..... 268
McVeigh v. U. S., 11 Wall. 259..... 632
Maddock v. Sugar-Refining Co., 91 Fed. 166 42
Maddox v. Burnham, 156 U. S. 544, 547, 15 Sup. Ct. 448, 449.....548, 572
Magowan v. Packing Co., 141 U. S. 332, 12 Sup. Ct. 71..... 35
Mahn v. Harwood, 112 U. S. 354, 5 Sup. Ct. 174, 6 Sup. Ct. 451..... 31
Majestic, The, 9 C. C. A. 161, 60 Fed. 624; 166 U. S. 375, 386, 17 Sup. Ct. 597..... 150, 535, 536
Manhanset, The, 53 Fed. 843..... 211
Manhattan Hardware Co. v. Phalen, 128 Pa. St. 110, 118, 18 Atl. 428..... 640
Marine Bank v. Bank, 2 Wall. 252..... 435
Mark v. Insurance Co., 13 C. C. A. 157, 64 Fed. 804..... 23
Market Street Cable Ry. Co. v. Rowley, 155 U. S. 621, 630, 15 Sup. Ct. 224..... 131
Markham v. O'Connor, 52 Ga. 183..... 594

Digitized by Google

Page
Marks v. Townsend, 97 N. Y. 590..... 288
Marshall v. Knox, 16 Wall. 551..... 500
Martin v. Webb, 110 U. S. 7, 3 Sup. Ct. 428 640
Martinton v. Fairbanks, 112 U. S. 670, 5 Sup. Ct. 321..... 416
Marvin v. Insurance Co., 85 N. Y. 278... 675
Mascotte, The, 2 C. C. A. 399, 51 Fed. 605 150
Mason v. U. S., 136 U. S. 581, 10 Sup. Ct. 1062 653
Mather v. Rillston, 156 U. S. 391, 15 Sup. Ct. 464 363
Maux Ferry Gravel Road Co. v. Branegan, 40 Ind. 361, 364..... 373
Meehan v. Bank (Neb.) 62 N. W. 490.... 334
Memphis City R. Co. v. Mayor, etc., of City of Memphis, 4 Cold. 406..... 425
Memphis & L. R. R. Co. v. Dow, 120 U. S. 287, 7 Sup. Ct. 482.....175, 176
Menotti v. Dillon, 167 U. S. 703, 17 Sup. Ct. 945..... 573
Mercer Co. v. Hacket, 1 Wall. 83..... 475
Merchants' Nat. Bank v. Bank, 10 Wall. 604, 644..... 640
Merchants' Nat. Bank of Gardiner v. Gaslight Co., 159 Mass. 505, 507, 508, 34 N. E. 1083..... 371
Merrill v. Bank, 21 C. C. A. 282, 75 Fed. 148 314
Merrill Railway & Lighting Co. v. City of Merrill, 80 Wis. 358, 49 N. W. 965... 5
Merritt v. Barge Co., 24 C. C. A. 530, 79 Fed. 228 497
Mesterman v. Insurance Co., 5 Wash. 524, 32 Pac. 458..... 619
Miles v. Insurance Co., 3 Gray, 580..... 673
Miles v. Thorne, 99 Am. Dec. 390, 391.... 226
Miller v. Anderson, 1 S. D. 539, 47 N. W. 957 218
Miller v. Mfg. Co., 151 U. S. 186, 207, 14 Sup. Ct. 310, 318.....129, 391
Miller v. Tiffany, 1 Wall. 298..... 341
Milliken v. Pratt, 125 Mass. 374..... 551
Milnor v. Metz, 16 Pet. 221..... 54
Milwaukee & St. P. Ry. Co. v. Arms, 91 U. S. 489, 493..... 481
Minchen v. Hart, 18 C. C. A. 570, 75 Fed. 294 298
Minnesota Co. v. St. Paul Co., 2 Wall. 609, 633.....163, 305
Mississippi Coal & Ice Co. v. The Ottumwa Belle, 78 Fed. 643..... 594
Mississippi & M. R. Co. v. Howard, 7 Wall. 413..... 401
Mississippi & R. R. Boom Co. v. Patterson, 98 U. S. 403..... 265
Missouri Pac. R. Co. v. Hall, 14 C. C. A. 153, 66 Fed. 868..... 368
Missouri Pac. R. Co. v. Harris, 67 Tex. 166, 2 S. W. 574..... 142
Missouri Pac. R. Co. v. Moseley, 6 C. C. A. 641, 57 Fed. 921.....579
Missouri Pac. R. Co. v. Sidell, 14 C. C. A. 477, 67 Fed. 464, 469..... 640
Missouri River Co. v. Richards, 8 Kan. 76, 81..... 373
Mitchell v. Dors, 6 Ves. 147..... 349
Mitchell v. Mining Co. (Cal.) 17 Pac. 246-257 496
Mitchell v. Wall, 111 Mass. 492..... 79

Page
Moller v. U. S., 6 C. C. A. 459, 464, 57 Fed. 490, 495..... 416
Mooney v. The Hondurino, 11 La. Ann. 538 529
Moore v. Insurance Co., 141 N. Y. 219, 36 N. E. 191..... 675
Moran v. Sturges, 154 U. S. 256, 279, 14 Sup. Ct. 1019..... 140
Moreland v. Brown, 30 C. C. A. 23, 86 Fed. 257.....434, 435
Morey v. City of Duluth, 77 N. W. 829....221
Morford v. Bank, 26 Barb. 568..... 556
Morgan's L. & T. R. & S. S. Co. v. Railway Co., 137 U. S. 171, 201, 11 Sup. Ct. 61 163
Morris Canal & Banking Co. v. Van Vorst's Adm'x, 21 N. J. Law, 101..... 262
Morton v. Nebraska, 21 Wall. 660..... 608
Moses Taylor, The, 4 Wall. 411..... 633
Mt. Adams & E. P. Inclined R. Co. v. Lowry, 20 C. C. A. 596, 74 Fed. 463..... 103
Mower v. Fletcher, 116 U. S. 380, 6 Sup. Ct. 409..... 604
Munns v. De Nemours, 3 Wash. C. C. 31, Fed. Cas. No. 9,926..... 79
Murphy v. Martin, 58 Wis. 278, 16 N. W. 603 84
Murray's Lessee v. Improvement Co., 18 How. 272, 277, 280..... 219
Mutual Life Ins. Co. v. Conoley, 11 C. C. A. 116, 63 Fed. 180..... 437
Mutual Life Ins. Co. v. Hillmon, 145 U. S. 285, 12 Sup. Ct. 909..... 493
Mutual Life Ins. Co. v. Newton, 22 Wall. 32 469

Naddo v. Bardon, 2 C. C. A. 335, 51 Fed. 493, 498.....226, 228
Nashville, C. & St. L. R. Co. v. Gann, 47 S. W. 493, 101 Tenn. 257..... 101
Nashville, C. & St. L. R. Co. v. Handman, 13 Lea, 425, 430.....98, 101
Natchez, J. & C. R. Co. v. Currie, 62 Miss. 506..... 422
National Bank v. Insurance Co., 104 U. S. 54 434
National Life Ins. Co. of Montpelier v. Board, 10 C. C. A. 637, 62 Fed. 778..... 278
National Park Bank v. Harmon, 79 Fed. 891 586
National Security Bank v. Cushman, 121 Mass. 490..... 664
Nelson v. Woodruff, 1 Black, 156, 169..... 150
Neptune, The, 6 Blatchf. 193, Fed. Cas. No. 10,118; 12 Moore, P. C. 346.....206, 535
New England Loan & Trust Co. v. Young, 81 Iowa, 732, 739, 39 N. W. 116, 46 N. W. 1103.....217, 219
New Jersey & N. Y. R. Co. v. Young, 1 C. C. A. 428, 49 Fed. 723..... 99
Newman v. Foster, 8 Wend. 602..... 480
Newton Nat. Bank v. Newbegin, 20 C. C. A. 339, 74 Fed. 135..... 294
New York Cent. R. Co., In re, 66 N. Y. 407 473
New York Grape-Sugar Co. v. Grape-Sugar Co., 42 Fed. 455..... 29
New York & N. H. R. Co. v. Ketchum, 27 Conn. 170..... 373
New Zealand Ins. Co. v. Steamship Co., 24 C. C. A. 644, 79 Fed. 368..... 143

Digitized by Google

Page
Niagara v. Cordes, 21 How. 7, 22, 26.... 150
Niblack v. Cosler, 74 Fed. 1000; 26 C. C. A. 16, 80 Fed. 596..... 664
Nied Elwin, The, 1 Dod. 53..... 633
Nitche v. Earle, 117 Ind. 270, 275, 19 N. E. 749..... 372
Noble v. Blount, 77 Mo. 235..... 372
Noell v. Gaines, 68 Mo. 649..... 291
Norman v. Railroad Co., 10 C. C. A. 617, 62 Fed. 727..... 102
Norris v. Jackson, 9 Wall. 125..... 416
Northern Liberties v. Coates' Heirs, 15 Pa. St. 245..... 658
Northern Pac. R. Co. v. Colburn, 164 U. S. 383, 17 Sup. Ct. 98..... 569
Northern Pac. R. Co. v. Mfg. Co., 168 U. S. 604, 610, 18 Sup. Ct. 205, 207..... 567, 568, 571, 572, 574
Northern Pac. R. Co. v. Sanders, 166 U. S. 620, 636, 17 Sup. Ct. 671, 676..... 565, 568, 571, 572
Northrup v. Insurance Co., 47 Mo. 435, 444 489
Norton v. Bank, 61 N. H. 589..... 556
Norton v. Jensen, 33 C. C. A. 141, 90 Fed. 415, 422, 423, 429..... 129
Norton v. Shelby Co., 118 U. S. 425, 6 Sup. Ct. 1121..... 167

Oakland Bank of Savings v. Wilcox, 60 Cal. 126, 141..... 407
Oates v. Bank, 100 U. S. 239..... 599
O'Connell v. Reid, 5 C. C. A. 586, 592, 56 Fed. 531, 537..... 484
O'Donnell v. Clinton, 145 Mass. 461, 463, 14 N. E. 747..... 400
Oelrichs v. Spain, 15 Wall. 211, 228..... 348
Ogden v. Rummens, 3 Fost. & F. 751..... 101
Ogilvie v. Hallam, 58 Iowa, 714, 12 N. W. 730..... 262
Ohio & M. Ry. Co. v. McCarthy, 96 U. S. 258, 267..... 557
Oil Creek & A. R. R. Co. v. Transportation Co., 83 Pa. St. 160..... 556
Oliver v. Piatt, 3 How. 333, 411..... 226
Omaha Bridge Cases, 2 C. C. A. 174, 230, 51 Fed. 309, 316..... 407
Omaha Consolidated Vinegar Co. v. Burns, 44 Neb. 21, 62 N. W. 301..... 598
Oolagah Coal Co. v. McCaleb, 15 C. C. A. 270, 68 Fed. 86..... 349
Oregon, The, 158 U. S. 186, 15 Sup. Ct. 804 629
Oval Wood Dish Co. v. Mfg. Co., 60 Fed. 285..... 389
Owings v. Hull, 9 Pet. 607..... 341
Owings v. McKenzie, 133 Mo. 323, 33 S. W. 802..... 291

Pacific Exp. Co. v. Darnell (Tex. Sup.) 6 S. W. 765-767..... 142
Pacific R. Co. v. City of Leavenworth, 18 Fed. Cas. 953 (No. 10,649)..... 425
Pacific R. Co. v. Railway Co., 1 McCrary, 647, 3 Fed. 772; 111 U. S. 505, 522, 4 Sup. Ct. 583, 590, 592.....304, 305
Palmer v. Insurance Co., 1 Story, 360, Fed. Cas. No. 10,698..... 141
Palmer v. Martindell, 43 N. J. Eq. 90, 10 Atl. 802..... 304
Palmquist v. State (Fla.) 11 South. 521.. 117
Parker v. Baxter, 2 Gray, 185.....218, 219

Page
Parkersburg v. Brown, 106 U. S. 487, 1 Sup. Ct. 442..... 558
Parody v. Railway Co., 15 Fed. 205..... 100
Patterson v. Winn, 11 Wheat. 380..... 609
Pauley Jail Bldg. & Mfg. Co. v. Crawford Co., 28 C. C. A. 579, 84 Fed. 942.... 553
Pauling v. Steel Co., 94 N. Y. 334....641, 642
Pauly v. Trust Co., 165 U. S. 619, 17 Sup. Ct. 470..... 585
Pearse v. Morrice, 2 Adol. & E. 94..... 185
Pechner v. Insurance Co., 65 N. Y. 195.. 622
People v. Champion, 16 Johns. 61..... 474
People v. City of Syracuse, 144 N. Y. 63, 66, 38 N. E. 1006..... 92
People v. Com'rs, 8 N. Y. 476; 37 N. Y. 360..... 474
People v. Flagg, 46 N. Y. 401..... 473
People v. Judges, 23 Wend. 360..... 474
People v. Railroad Co., 58 N. Y. 152..... 426
People v. Smith, 21 N. Y. 595..... 473
People's Bank v. Bank, 101 U. S. 181.... 556
People's Bank of Belleville v. Calhoun, 102 U. S. 256..... 163
People's Building, Loan & Savings Ass'n v. Tinsley (Va.) 31 S. E. 508..... 341
People's Pass. Ry. v. Railroad Co., 10 Wall. 38..... 425
Peralta v. Mariea, 3 Cal. 185..... 264
Petrakion v. Arbeely (Com. Pl.) 26 N. Y. Supp. 731..... 601
Pettibone v. U. S., 148 U. S. 197, 13 Sup. Ct. 542..... 110
Pharis v. Leachman, 20 Ala. 662..... 275
Philadelphia, W. & B. R. Co. v. Quigley, 21 How. 202, 210, 214.....49, 481, 487
Philadelphia, W. & B. R. Co. v. Trimble, 10 Wall. 367-377..... 74
Phœnix Ins. Co. v. Spiers, 8 S. W. 453.. 620, 623
Phœnix Ins. Co. v. Transportation Co., 117 U. S. 312, 321, 6 Sup. Ct. 750, 1176... 146
Phœnix Ins. Co. v. Warttemberg, 24 C. C. A. 547, 79 Fed. 245..... 620
Phœnix Mut. Life Ins. Co. v. Raddin, 120 U. S. 183, 7 Sup. Ct. 500..... 673
Pillow v. Roberts, 13 How. 472, 474..... 642
Pitney v. Insurance Co., 65 N. Y. 6..... 625
Pittsburgh, C. & St. L. Ry. Co. v. Bridge Co., 131 U. S. 371-381, 9 Sup. Ct. 770, 773.....401, 640
Plankinton Bank, In re, 87 Wis. 378, 58 N. W. 784..... 664
Planter, The, 7 Pet. 343; 2 Woods, 490, Fed. Cas. No. 11,207a.....150, 401
Plummer v. Kansas City, 48 Mo. App. 484 486
Poconoket, The, 17 C. C. A. 309, 70 Fed. 640..... 470
Poole v. Ass'n, 30 Fed. 513, 520..... 640
Porter v. Railroad Co., 37 Me. 349..... 643
Porter v. Sabin, 149 U. S. 473, 13 Sup. Ct. 1008..... 162
Porter v. Steel Co., 120 U. S. 673, 7 Sup. Ct. 1206..... 187
Post Pub. Co. v. Hallam, 8 C. C. A. 201, 206, 59 Fed. 530, 535..... 491
Potomac, The, 105 U. S. 630, 634..... 146
Potter v. U. S., 155 U. S. 438, 15 Sup. Ct. 144..... 110
Potts v. Creager (1895) 155 U. S. 597, 15 Sup. Ct. 194..... 40

Digitized by Google

Page
Powell v. Fall, 5 Q. B. Div. 597..... 428
Powers v. Russell, 13 Pick. 76..... 469
President, etc., of Bank of United States v. Dandridge, 12 Wheat. 64..... 401
Preteca v. Land Grant Co., 1 C. C. A. 607, 50 Fed. 674..... 348
Price v. Town of Breckenridge, 92 Mo. 378, 387, 5 S. W. 20..... 372
Prince v. City of Quincy, 105 Ill. 138..... 5
Proprietors of Mill Dam Foundry v. Hovey, 21 Pick. 417, 428..... 643
Providence Bank v. Billings, 4 Pet. 514, 562 218
Providence Rubber Co. v. Goodyear, 9 Wall. 803..... 133
Provident Life & Trust Co. v. Mercer Co., 170 U. S. 593, 18 Sup. Ct. 788..... 475
Putnam v. U. S., 162 U. S. 687, 694, 16 Sup. Ct. 923..... 118

Quinlan v. Insurance Co., 133 N. Y. 356, 31 N. E. 31..... 675

Raimond v. Parish, 132 U. S. 192, 10 Sup. Ct. 57.....416, 417
Rand v. Bank, 87 Fed. 520..... 292
Rapid Transit, The, 11 Fed. 322..... 528
Rapier v. Tramway [1893] 2 Ch. 588..... 428
Redfield v. Iron Co., 110 U. S. 174, 176, 3 Sup. Ct. 570..... 409
Reece Buttonhole Mach. Co. v. Machine Co., 10 C. C. A. 194, 61 Fed. 958..... 390
Reilly v. City of Albany, 112 N. Y. 30, 42, 19 N. E. 506..... 92
Relief Fire Ins. Co. v. Shaw, 94 U. S. 574 622
Rensselaer & Saratoga R. Co. v. Davis, 43 N. Y. 137..... 473
Reock v. Mayor, etc., of Newark, 33 N. J. Law, 129..... 92
Rex v. Inhabitants, 8 Barn. & C. 471..... 185
Rich v. Lambert, 12 How. 347, 357..... 150
Richards v. Grinnell, 63 Iowa, 44, 18 N. W. 668..... 601
Richardson v. Banking Co., 36 C. C. A. 307, 94 Fed. 442.....317, 318
Richardson v. D. M. Osborne & Co., 82 Fed. 95..... 612
Richardson v. Kimball, 28 Me. 463..... 458
Richmond v. Irons, 121 U. S. 58, 7 Sup. Ct. 788..... 586
Richmond, F. & P. R. Co. v. City of Richmond, 96 U. S. 521.....425, 428
Robb v. Vos, 155 U. S. 13, 43, 15 Sup. Ct. 4..... 431
Robbins v. City of Chicago, 4 Wall. 657.. 428
Robbins v. Insurance Co., 149 N. Y. 477, 44 N. E. 159..... 619
Roberts v. Kain, 6 Rob. (N. Y.) 354, 358 259
Robertson v. Baldwin, 165 U. S. 275, 282, 17 Sup. Ct. 329..... 523
Robinson v. Mfg. Co., 89 Fed. 218-231.... 237
Rochester Savings Bank v. Averell, 96 N. Y. 467..... 641
Rogers v. Fitch, 27 C. C. A. 23, 81 Fed. 959 41
Rogers v. Railway Co., 22 Minn. 25, 27.. 373, 374
Romanow, In re, 92 Fed. 510..... 431
Rosborough v. Canal Co., 22 Cal. 557, 562 373
Rose v. Hirsh, 91 Fed. 149..... 132

Page
Roth v. Depot Co., 13 Wash. 525, 43 Pac. 641, 44 Pac. 253..... 363
Rouse v. Letcher, 156 U. S. 48, 15 Sup. Ct. 266..... 163
Rowell v. Lindsay, 113 U. S. 97, 102, 5 Sup. Ct. 507..... 129
Royer v. Belting Co., 135 U. S. 319, 10 Sup. Ct. 833.....128, 131
Rugan v. Sabin, 3 C. C. A. 578, 580, 53 Fed. 415, 518..... 228
Runkle v. Burnham, 153 U. S. 216, 14 Sup. Ct. 837..... 96
Russell v. Lythe, 6 Wend. 390..... 263

Safe-Deposit & Trust Co. v. Fricke, 152 Pa. St. 231, 236, 25 Atl. 530, 531..... 656
St. Clair v. U. S., 154 U. S. 134, 150, 14 Sup. Ct. 1002, 1008..... 118
St. Louis, F. S. & W. R. Co. v. Tiernan (Kan. Sup.) 15 Pac. 544, 553..... 373
St. Louis, I. M. & S. R. Co. v. Edwards, 24 C. C. A. 300, 78 Fed. 745..... 368
St. Louis Smelting & Refining Co. v. Kemp, 104 U. S. 636..... 609
St. Louis United Elevator Co. v. Nichols, 34 C. C. A. 90, 91 Fed. 832..... 652
St. Louis, V. & T. H. R. Co. v. Railroad Co., 145 U. S. 393-403, 12 Sup. Ct. 953... 187
St. Paul & P. R. Co. v. Railroad Co., 139 U. S. 1, 11 Sup. Ct. 389..... 571
Salt Lake City v. Hollister, 118 U. S. 256, 261, 263, 6 Sup. Ct. 1055, 1059.....49, 487, 557
Samuels v. Ass'n, 75 N. Y. 604..... 482
Sanders v. Palmer, 5 C. C. A. 77, 55 Fed. 217 .....79, 80, 83
Sans v. Joerris, 14 Wis. 666..... 480
Sargent v. Lock Co., 114 U. S. 63, 5 Sup. Ct. 1021..... 31
Saunders v. Short, 30 C. C. A. 462, 86 Fed. 225, 229..... 598
Sayre v. Land Co., 73 Ala. 85..... 304
Scheftel v. Hays, 7 C. C. A. 308, 58 Fed. 457 226
Schirmer v. People, 33 Ill. 276, 284..... 117
Schofield v. Railroad Co., 114 U. S. 615, 5 Sup. Ct. 1125.....103, 579
Schuster v. Rader, 13 Colo. 329, 22 Pac. 505 304
Scott v. Creditors, 3 La. Ann. 40..... 529
Scott v. Donald, 165 U. S. 58, 89, 17 Sup. Ct. 265 482
Scott v. Latimer, 33 C. C. A. 1, 89 Fed. 843, 855.....267, 294
Scott v. Neely, 140 U. S. 106, 11 Sup. Ct. 712 443
Scott v. Shelor, 28 Grat. 891, 895, 899....79, 84
Scott v. Wood, 81 Cal. 398, 22 Pac. 871.. 46
Scudder v. Bank, 91 U. S. 406..... 674
Scully v. Rose, 61 Md. 408..... 349
Sears v. Cottrell, 5 Mich. 251..... 219
Sears v. Wingate, 3 Allen, 103..... 44
Seitz v. Refrigerating Co., 141 U. S. 510, 12 Sup. Ct. 46..... 622
Seligman v. Bank, 3 Hughes, 647, Fed. Cas. No. 12,642..... 556
Selvester v. U. S., 170 U. S. 262, 18 Sup. Ct. 580..... 114
Shanks v. Stumpf (Sup.) 51 N. Y. Supp. 154 482
Shapleigh v. City of San Angelo, 167 U. S. 646, 17 Sup. Ct. 957..... 328

Digitized by Google

Page
Shaw v. Kellogg, 170 U. S. 312, 18 Sup. Ct. 632 348
Shepard v. Naylor, 5 Gray, 591..... 44
Shepard v. Speer, 140 Ill. 238, 246, 29 N. E. 718..... 274
Sherman v. Fitch, 98 Mass. 59, 64..... 640
Shirley v. Fabrique, 15 La. 140..... 529
Simonds Rolling-Mach. Co. v. Mfg. Co., 90 Fed. 201..... 25
Sinard v. Patterson, 3 Blackf. 354..... 262
Sioux City Terminal Railroad & Warehouse Co. v. Trust Co., 27 C. C. A. 73, 82 Fed. 124-133..... 187
Slark v. Broom, 7 La. Ann. 337..... 531
Slee v. Bloom, 19 Johns. 456..... 192
Smiley v. Barker, 28 C. C. A. 9, 83 Fed. 684 594
Smith, In re, 92 Fed. 135..... 431
Smith v. Condry, 1 How. 28, 36..... 368
Smith v. Dedham, 144 Mass. 177, 10 N. E. 782 5
Smith v. Mathews, 152 N. Y. 152, 158, 46 N. E. 164..... 482
Smith v. State, 58 Miss. 867, 871..... 112
Sneathen v. Sneathen, 104 Mo. 201, 16 S. W. 497..... 550
Snider v. Dobson, 21 C. C. A. 76, 74 Fed. 757 306
Snyder v. Hopkins, 31 Kan. 557, 3 Pac. 367 349
Society Perun v. Cleveland, 43 Ohio St. 481, 3 N. E. 357..... 165
Southard v. Brady, 36 Fed. 560..... 144
Southern Ins. Co. v. Parker, 61 Ark. 207, 212, 215, 32 S. W. 507.....268, 271
Southern Pac. Co. v. Johnson, 16 C. C. A. 317, 69 Fed. 559..... 97
Southern Pac. Co. v. Seley, 152 U. S. 145, 152, 14 Sup. Ct. 530.....97, 101, 369
Southern Pac. R. Co. v. Groeck, 31 C. C. A. 334, 87 Fed. 970..... 570
Sparks v. Transfer Co., 104 Mo. 531, 539, 15 S. W. 417..... 640
Speidel v. Henrici, 120 U. S. 377, 386, 7 Sup. Ct. 610..... 228
Spencer v. Ass'n, 142 N. Y. 509, 37 N. E. 625 469
Spering's Appeal, 71 Pa. St. 11..... 410
Sperry v. Ethridge, 70 Iowa, 27, 30 N. W. 4..... 496
Spokane Co. v. Bank, 16 C. C. A. 81, 68 Fed. 979..... 435
Sprague-Brimmer Mfg. Co. v. Furnishing Goods Co., 26 Fed. 572..... 192
Stackpole v. Arnold, 11 Mass. 27..... 332
Standard Oil Co. v. Hawkins, 20 C. C. A. 468, 74 Fed. 895..... 432
Standard Oil Co. v. Helmick, 148 Ind. 459, 47 N. E. 14..... 100
Stanton v. Embrey, 93 U. S. 548..... 497
State v. City of Great Falls, 19 Mont. 518, 49 Pac. 15..... 3
State v. Craton, 28 N. C. 165, 168..... 117
State v. Gilbert, 13 Vt. 647, 651..... 112
State v. Lewis, 69 Mo. 92, 96.....116, 117
State v. Railroad Co., 24 Neb. 143, 38 N. W. 43..... 167
State v. Vanderbilt, 37 Ohio St. 590..... 167
State v. Wood, 17 Iowa, 19, 21..... 116
State v. Young, 23 Minn. 551..... 551
State Board of Agriculture v. Railway Co., 47 Ind. 407..... 557

Page
Stearns v. Russell, 29 C. C. A. 121, 85 Fed. 218..... 41
Steel v. Insurance Co., 51 Fed. 715, 722... 141
Steele v. Insurance Co., 17 Pa. St. 290.... 531
Stephens v. People, 19 N. Y. 549, 552..... 117
Stevens v. Dennett, 51 N. H. 324..... 595
Stewart v. Masterson, 131 U. S. 151, 9 Sup. Ct. 682..... 305
Stewart v. Railroad Co., 41 Fed. 736, 739 373
Stewart v. Sonneborn, 98 U. S. 187, 192, 194, 195.....79, 80, 83
Stilwell v. Staples, 19 N. Y. 401..... 531
Stone v. Bancroft, 112 Cal. 653, 660, 44 Pac. 1069.....596, 598
Storrs v. Barker, 6 Johns. Ch. 166..... 594
Sturdivant v. Bank, 9 C. C. A. 256, 60 Fed. 730..... 341
Sturgis v. Spofford, 45 N. Y. 446..... 472
Suburban Hotel Co., In re, 2 Ch. App. 737 193
Sullivan v. Mfg. Co., 113 Mass. 398..... 523
Sullivan v. Railroad Co., 51 N. J. Law, 518, 18 Atl. 689..... 422
Supreme Lodge v. Hill, 22 C. C. A. 280, 76 Fed. 468..... 299
Supreme Lodge v. Kalinski, 163 U. S. 289, 16 Sup. Ct. 1047..... 299
Swearingen v. Roberts, 12 Neb. 333, 11 N. W. 325..... 235
Sweeney v. Engraving Co., 101 N. Y. 520, 524, 5 N. E. 358..... 101
Swift v. Railroad Co., 64 Fed. 59..... 109
Swift v. Smith, 25 C. C. A. 154, 159, 79 Fed. 709, 714..... 228
Swinisen v. Scawen, 1 Dickens, 117...214, 409
Sybil, The, 4 Wheat. 98..... 205

Tallman v. Railroad Co., 121 N. Y. 119, 123, 23 N. E. 1134..... 349
Tarbox v. Steamboat Co., 50 Me. 345..... 469
Tatham v. Lowber, 4 Blatchf. 86, 87, Fed. Cas. No. 13,765..... 29
Taylor v. Canal Co., 113 Pa. St. 162-175, 8 Atl. 43..... 363
Taylor v. Railroad Co., 13 Fed. 152..... 189
Teal v. Walker, 111 U. S. 242, 246, 4 Sup. Ct. 420.....90, 247
Tenney v. Lumber Co., 43 N. H. 343, 350 643
Terrill v. Auchauer, 14 Ohio St. 80-88... 184, 185
Territory v. Yarberry, 2 N. M. 391, 457.. 117
Texas & P. R. Co. v. Archibald, 170 U. S. 673, 18 Sup. Ct. 777..... 98
Texas & P. R. Co. v. Breadow, 90 Tex. 26, 36 S. W. 410..... 358
Texas & P. R. Co. v. Rogers, 6 C. C. A. 403, 57 Fed. 378..... 97
Texas & P. R. Co. v. Scott, 23 C. C. A. 424, 77 Fed. 726..... 285
Thames & Mersey Ins. Co. v. O'Connell, 29 C. C. A. 624, 86 Fed. 150..... 23
Thayer v. Goodale, 4 La. 221..... 531
Thayer v. Mill Co., 31 Or. 437, 444, 51 Pac. 202..... 643
Thew v. Miller, 73 Iowa, 743, 747, 37 N. W. 771 256
Thomas v. Glendinning, 13 Utah, 47, 53, 56, 44 Pac. 652, 654..... 228
Thomas v. Railroad Co., 101 U. S. 83..... 184
Thomas v. Spring Co., 23 C. C. A. 211, 221, 77 Fed. 420, 430..... 393
Thomas Fletcher, The, 24 Fed. 375..... 528

Digitized by Google

Page
Thomas Melville, The, 37 Fed. 271..... 397
Thompson v. Bank, 146 U. S. 240, 13 Sup. Ct. 66..... 556
Thompson v. Boisselier, 114 U. S. 211, 5 Sup. Ct. 1042..... 36
Thompson v. Libby, 34 Minn. 374, 377, 26 N. W. 1..... 270
Thomson-Houston Electric Co. v. Electric Co., 56 Fed. 849, 853..... 232
Thurber v. Miller, 14 C. C. A. 432, 67 Fed. 371 268
Tilden v. Blair, 21 Wall. 241..... 551
Tilghman v. Proctor, 125 U. S. 161, 8 Sup. Ct. 894..... 133
Tilton v. Alcott, 16 Barb. 599..... 263
Tiner v. The Bride, 5 La. Ann. 756..... 531
Titus v. Insurance Co., 81 N. Y. 410..... 675
Todd v. The Tulchen, 2 Fed. 600..... 633
Torp v. Gulseth, 37 Minn. 135, 33 N. W. 550 259
Town of Hamden v. New Haven & Northampton Co., 27 Conn. 158..... 426
Townsend v. Jemison, 9 How. 407..... 333
Townsend v. Thomson, 189 N. Y. 152, 34 N. E. 891..... 238
Treat Mfg. Co. v. Iron Co., 157 U. S. 674, 15 Sup. Ct. 718..... 103
Trotter v. Furniture Co., 47 S. W. 425, 101 Tenn. 380..... 100
Tucker v. Spalding, 13 Wall. 455..... 123
Turner v. Stetts, 28 Ala. 420..... 531
Tuthill v. Wilson, 90 N. Y. 423..... 332
Tuttle v. Railway Co., 122 U. S. 189, 7 Sup. Ct. 1166..... 97
Twin Lick Oil Co. v. Marbury, 91 U. S. 587, 592, 593..... 227

Uline v. Railroad Co., 101 N. Y. 98, 122, 4 N. E. 536..... 349
Ullrich v. Press Co. (Sup.) 50 N. Y. Supp. 788, 790, 792, 798.....480, 482
Union, The, 4 Blatchf. 90, Fed. Cas. No. 14,346 .....629, 633
Union Gold Min. Co. v. Bank, 2 Colo. 248, 257; 96 U. S. 640..... 640
Union Mut. Life Ins. Co. v. Wilkinson, 13 Wall. 222.....622, 625
Union Pac., D. & G. R. Co. v. Patterson, 4 Colo. App. 575, 577, 36 Pac. 913..... 362
Union Pac. R. Co. v. Daniels, 152 U. S. 684, 14 Sup. Ct. 756..... 96
Union Pac. R. Co. v. Jarvi, 3 C. C. A. 433, 53 Fed. 65..... 370
Union Pac. R. Co. v. McDonald, 152 U. S. 262, 14 Sup. Ct. 619..... 578
Union Pac. R. Co. v. Railway Co., 163 U. S. 564, 16 Sup. Ct. 1173..... 558
Union Paper Bag Mach. Co. v. Murphy, 97 U. S. 120-125.....390, 391
U. S. v. Allis, 73 Fed. 165, 171..... 124
U. S. v. Britton, 107 U. S. 655, 662, 2 Sup. Ct. 512, 518; 108 U. S. 199, 206, 2 Sup. Ct. 531.....109, 110
U. S. v. Carll, 105 U. S. 612..... 110
U. S. v. Coolidge, 1 Wheat. 415..... 109
U. S. v. Goodrich, 4 C. C. A. 160, 54 Fed. 21 437
U. S. v. Harper, 33 Fed. 471, 481..... 124
U. S. v. Hess, 124 U. S. 483, 8 Sup. Ct. 571 110
U. S. v. Hudson, 7 Cranch, 32..... 103
U. S. v. Kirby, 7 Wall. 482..... 267

Page
U. S. v. Martin, 4 Cliff. 156, Fed. Cas. No. 15,728 109
U. S. v. Means, 42 U. S. 599..... 124
U. S. v. North Carolina, 136 U. S. 211, 218, 10 Sup. Ct. 920..... 409
U. S. v. Peters, 87 Fed. 984..... 108
U. S. v. Railroad Co., 146 U. S. 570, 599, 13 Sup. Ct. 152..... 572
U. S. v. Reisinger (Dec. 7, 1898) 33 C. C. A. 495, 91 Fed. 112, 638.....626, 627
U. S. v. Shapleigh, 4 C. C. A. 237, 246, 54 Fed. 126, 135..... 479
U. S. v. Simmons, 96 U. S. 362..... 110
U. S. v. Stoddard, 87 Fed. 194; 34 C. C. A. 175, 91 Fed. 1005..... 681
U. S. v. Tobacco Co., 166 U. S. 468, 474, 17 Sup. Ct. 619..... 146
U. S. v. Walsh, 5 Dill. 60, Fed. Cas. No. 16,636 109
United States Freehold & Emigration Co. v. Gallegos, 32 C. C. A. 470, 89 Fed. 769 349

Vail v. Hamilton, 85 N. Y. 453..... 641
Van Pelt v. McGraw, 4 N. Y. 110..... 496
Van Wickle v. The Belle Gates, 12 La. Ann. 270..... 529
Vason v. Ball, 56 Ga. 269..... 238
Victory, The, 168 U. S. 423, 18 Sup. Ct. 149 535
Vide Breeze v. Haley, 10 Colo. 5, 13 Pac. 913 .....351, 352
Vide Wilson v. Haley Live-Stock Co., 153 U. S. 39, 14 Sup. Ct. 763..... 351
Village of Middletown, In re, 82 N. Y. 196 473
Virgo, The, 13 Blatchf. 255, Fed. Cas. No. 16,976 633
Voltz v. Blackmar, 64 N. Y. 440, 446..... 232
Von Bories v. Insurance Co., 8 Bush, 133 620

Wabash, St. L. & P. R. Co. v. Ham, 114 U. S. 595, 5 Sup. Ct. 1081..... 181
Wabash, St. L. & P. R. Co. v. Trust Co., 23 Fed. 513..... 164
Wade v. Borough of Oakmont (Pa. Sup.) 30 Atl. 959..... 5
Waite v. City of Santa Cruz, 89 Fed. 619, 630 232
Walker v. Cheever, 35 N. H. 345..... 274
Wallace v. Bank, 89 Tenn. 630, 15 S. W. 448 411
Walsh v. Insurance Co., 32 N. Y. 427, 436; 73 N. Y. 5.....150, 675
Walsh v. Mayer, 111 U. S. 31, 4 Sup. Ct. 260 333
Walther v. Insurance Co., 65 Cal. 417, 4 Pac. 413..... 469
Walton v. Railway Co., 6 C. C. A. 223, 225, 56 Fed. 1006, 1008..... 372
Ward v. Chamberlain, 21 How. 572, 574.. 631
Warner v. Publishing Co., 32 N. Y. 181, 184, 31 N. E. 393..... 482
Warren v. Burt, 7 C. C. A. 105, 107, 58 Fed. 101, 103..... 232
Washburn v. Gould, 3 Story, 122, 144, Fed. Cas. No. 17,214..... 28
Washington & G. R. Co. v. Bradleys, 10 Wall. 299 540
Washington & G. R. Co. v. McDade, 135 U. S. 570, 10 Sup. Ct. 1044..... 101
Water-Meter Co. v. Desper, 101 U. S. 332, 337 129
Watson v. Tarpley, 18 How. 517..... 599

Digitized by Google

Page
Way v. Railroad Co., 40 Iowa, 341..... 523
Waynesville Nat. Bank v. Irons, 8 Fed. 1, and note..... 664
Weaver v. Upton, 29 N. C. 458..... 601
Weller v. Von Hoven, 42 La. Ann. 602, 603, 7 South. 702..... 253
Welsh v. Phillips, 54 Ala. 309..... 238
Wendler Mach. Co., In re, 2 App. Div. 16, 20, 37 N. Y. Supp. 444..... 641
Wessels v. Beeman, 66 Mich. 343, 33 N. W. 510..... 261
West v. Platt, 127 Mass. 367, 372..... 400
Westchester Fire Ins. Co. v. Earle, 33 Mich. 144.....620, 622
Western v. Insurance Co., 12 N. Y. 258.. 674
Western Assur. Co. v. Altheimer, 58 Ark. 565, 575, 25 S. W. 1067..... 271
Western Coal & Mining Co. v. Ingraham, 17 C. C. A. 71, 70 Fed. 219..... 370
Westinghouse v. Power-Brake Co., 170 U. S. 537, 538, 569, 18 Sup. Ct. 707, 723..... 391
West Point Iron Co. v. Reymert, 45 N. Y. 703 349
Wetzel v. Transfer Co., 12 C. C. A. 490, 65 Fed. 23; 169 U. S. 237, 241, 18 Sup. Ct. 307..... 226
Wheeler v. Nesbit, 24 How. 544, 550..... 79
Wheeler & Wilson Mfg. Co. v. Howard, 28 Fed. 741..... 291
Whisper, The, 4 C. C. A. 654, 54 Fed. 896 520
White v. Brown, 2 Cush. 412..... 531
White v. Knox, 111 U. S. 784, 4 Sup. Ct. 686 436
White v. Miller, 52 Minn. 367, 54 N. W. 736 291
White v. Nichols, 3 How. 266..... 484
White Squall, The, 4 Blatchf. 103, Fed. Cas. No. 17,570..... 533
Whitney v. Houghten, 127 Mass. 527..... 84
Whitney v. Taylor, 158 U. S. 85, 94, 15 Sup. Ct. 800..... 567
Whitten v. Bennett, 30 C. C. A. 140, 86 Fed. 405 288
Wicker v. Hoppock, 6 Wall. 94, 99, 100.... 255
Wickham v. Levistones, 11 La. Ann. 702.. 530
Willard v. Dorr, 3 Mason, 91, Fed. Cas. No. 17,679 143
Willard v. Wood, 135 U. S. 309, 10 Sup. Ct. 831; 164 U. S. 502, 17 Sup. Ct. 176 333, 334

Page
Williams v. Benedict, 8 How. 107..... 274
Williams v. Gibbs, 17 How. 239, 254, 255.. 275
Williams v. Gillies, 75 N. Y. 197..... 332
Williams v. McKay, 40 N. J. Eq. 189, 200; 46 N. J. Eq. 25, 39, 18 Atl. 824.....407, 408
Williams v. Robbins, 16 Gray, 77..... 332
Williamson v. Allison, 2 East, 452..... 149
Wilson v. Live-Stock Co., 153 U. S. 39, 14 Sup. Ct. 768.....96, 351, 353
Wilson v. Ranch Co., 20 C. C. A. 244, 73 Fed. 994 270
Wilson's Heirs v. Insurance Co., 12 Pet. 140 653
Winans v. Denmead, 15 How. 330-342..... 390
Winchester v. Railroad Co., 4 Md. 231, 241 232
Windsor v. McVeigh, 93 U. S. 274..... 632
Winslow v. Leland, 128 Ill. 304, 340, 21 N. E. 588 274
Wood v. Carpenter, 101 U. S. 135, 139, 141 226
Wood v. City of Ft. Wayne, 119 U. S. 320, 321, 7 Sup. Ct. 219..... 400
Wood v. Coman, 56 Ala. 283..... 261
Wood v. Insurance Co., 149 N. Y. 382, 44 N. E. 80 619
Wood v. Mfg. Co., 23 Or. 23, 25, 23 Pac. 848 373
Wood v. Waterworks Co., 44 Fed. 146, 147, 150, 151.....640, 644
Work v. Leathers, 97 U. S. 379..... 159
Wormell v. Railroad Co., 79 Me. 405, 10 Atl. 52 523
Worsted Mills v. Knott, 27 C. C. A. 326, 82 Fed. 471..... 535
Wright v. Roseberry, 121 U. S. 488, 7 Sup. Ct. 985 .....604, 609
Wrightman v. Boone Co., 31 C. C. A. 570, 88 Fed. 435..... 553
Wygal v. Bigelow, 42 Kan. 477, 22 Pac. 612 256

Yates v. Joyce, 11 Johns. 136, 140..... 496
Yonley v. Lavender, 21 Wall. 276..... 274
Young v. Fox (Sup.) 49 N. Y. Supp. 634.. 482
Young v. Godbe, 15 Wall. 562..... 214
Younge v. Guilbeau, 3 Wall. 636..... 550

Zabriskie v. Railroad Co., 23 How. 381-398 186, 401
Zimmerman v. Sorelle, 25 C. C. A. 518, 80 Fed. 417 497

Digitized by Google

CASES

In the United States Circuit Courts of Appeals in which Rehearings have been Granted or Denied.

American Credit Indemnity Co. v. Athens Woolen Mills.....34 C. C. A. 161
Rehearing denied, June 6, 1899.

City of Helena v. Mills.....36 C. C. A. 1
Rehearing denied, May 23, 1899.

Evans v. Kister.....35 C. C. A. 28
Rehearing denied, June 6, 1899.

Hook v. Mercantile Trust Co. of New York.....36 C. C. A. 645
Rehearing denied, October 3, 1899.

Irvine v. Angus.....36 C. C. A. 580
Rehearing denied, May 23, 1899.

Overweight Counterbalance Elevator Co. v. Improved Order of Red Men's Hall Ass'n.....36 C. C. A. 125
Rehearing denied, March 2, 1899.

Peters v. United States.....36 C. C. A. 105
Rehearing denied, March 2, 1899.

Pittsburg, C. & St. L. Ry. Co. v. Hood.....36 C. C. A. 423
Rehearing denied, July 5, 1899.

St. Louis United Elevator Co. v. Nichols.....34 C. C. A. 90
Rehearing denied, October 3, 1899.

Sandham v. Grounds.....36 C. C. A. 103
Rehearing denied, June 1, 1899.

Ulster S. S. Co. v. Cape Fear Towing & Transportation Co.....36 C. C. A. 201
Rehearing denied, April 25, 1899.

Digitized by Google

INDEX TO NOTES.

VOLUMES 1–36.

ABANDONMENT.
Of trade-marks and trade-names. 33 C. C. A. 294.

ACTIONS.
Against counties—Jurisdiction of federal courts as restricted by state laws. 1 C. C. A. 514.
On insurance policy—Time of bringing suit. 2 C. C. A. 473; 35 C. C. A. 404.
Forms of action in federal courts. 5 C. C. A. 594.

ADMIRALTY.
Nature of hearing on appeal—Admission of new proof. 3 C. C. A. 322.
Demurrage—Quick dispatch. 14 C. C. A. 657; 21 C. C. A. 342.
Extinguishment of maritime liens. 17 C. C. A. 102.
Jurisdiction as to matters of contract. 18 C. C. A. 347; 27 C. C. A. 530.
General average. 20 C. C. A. 357.
Jurisdiction to enforce liens under state laws. 21 C. C. A. 21.
Collision rules. 28 C. C. A. 532; 29 C. C. A. 368.
Salvage awards. 30 C. C. A. 280.
Signals of meeting vessels. 30 C. C. A. 630.
Negligence of both master and servant. 30 C. C. A. 678.

ADVERSE POSSESSION.
Tax deed as color of title. 24 C. C. A. 402.

ALIENS.
Citizenship under state and federal laws. 6 C. C. A. 37.
Citizenship of the Chinese. 1 C. C. A. 212; 35 C. C. A. 332.

APPEAL.
What decrees are final. 2 C. C. A. 379.
In admiralty—New proofs. 3 C. C. A. 322.
Review of previous decisions as to validity of patents in circuit court of appeals. 3 C. C. A. 565.
Review of interlocutory decree granting or refusing injunction in patent case in circuit court of appeals. 3 C. C. A. 572; 27 C. C. A. 189; 32 C. C. A. 484.
When may be aided by mandamus. 10 C. C. A. 450.
Finality of judgments and decrees for purposes of review. 17 C. C. A. 238; 28 C. C. A. 482.

APPEARANCE.
Effect of. 5 C. C. A. 594.

ARBITRATION.
As a condition of an insurance policy. 9 C. C. A. 628.

ARBITRATION AND AWARD.
Setting aside an award for interest, prejudice, or misconduct of arbitrator. 12 C. C. A. 592.

ARGUMENTS.
Of counsel. 13 C. C. A. 589.

ASSIGNEES.
Citizenship as affecting the jurisdiction of the federal courts. 10 C. C. A. 254.

ASSIGNMENT.
Of right to use name as trade-mark. 17 C. C. A. 579.
Of claims against the United States and government contracts. 22 C. C. A. 650.

ASSIGNMENT FOR BENEFIT OF CREDITORS.
Power of corporation to make. 24 C. C. A. 221.

ATTACHMENT.
Issuance—Following state practice. 5 C. C. A. 594.

ATTORNEY AND CLIENT.
Arguments of counsel. 13 C. C. A. 589.
Bonds, securities, and other papers subject to lien for services. 32 C. C. A. 229.

AWARD.
Setting aside for interest, prejudice, or misconduct of arbitrator. 12 C. C. A. 592.

BAGGAGE.
Responsibility of sleeping-car companies for baggage and valuables. 10 C. C. A. 338.
Limitation of liability by carrier for passenger's baggage. 32 C. C. A. 308.

BANKS AND BANKING.
Who liable as shareholders in national banks. 15 C. C. A. 130.
Personal liability of directors. 12 C. C. A. 680; 33 C. C. A. 230.

Digitized by Google

BILLS OF LADING.
Perils of the sea. 19 C. C. A. 465.

BUILDING AND LOAN ASSOCIATIONS.
Statutory exemptions from operation of usury laws. 36 C. C. A. 343.

CANCELLATION.
Of patent to public land. 22 C. C. A. 38.

CARRIERS.
Duty to protect passengers from dangerous fellow passengers. 4 C. C. A. 231.
Right to restrain or expel disorderly passenger. 4 C. C. A. 231.
Duties and liabilities of sleeping-car companies. 10 C. C. A. 335; 34 C. C. A. 386.
Liability for injuries caused by negligence or torts of servants. 10 C. C. A. 466; 27 C. C. A. 651.
Duty to stop trains at station. 14 C. C. A. 362.
Quick dispatch—Demurrage. 14 C. C. A. 657; 21 C. C. A. 342.
Contracts other than for carriage. 20 C. C. A. 521.
Who are common carriers of goods. 20 C. C. A. 521.
Duty to trespasser on train. 31 C. C. A. 76.
Rights of licensee on train. 31 C. C. A. 164.
Rights of person traveling on pass. 31 C. C. A. 164.
Burden of proof of negligence where passengers have been injured. 32 C. C. A. 23.
Live stock—Evidence admissible in actions for injuries through negligence or accident. 32 C. C. A. 148.
Limitations of liability for personal injuries to passengers and for baggage. 32 C. C. A. 301.

CERTIFICATES.
Of receivers. 26 C. C. A. 350.

CERTIORARI.
From supreme court. 1 C. C. A. 5.

CHARTER.
Implied warranty of seaworthiness. 15 C. C. A. 388.

CHATTEL MORTGAGES.
Controlling effect of state decisions in United States courts. 11 C. C. A. 88.

CHILD.
Death of parent by wrongful act—Damages. 1 C. C. A. 34.

CHINESE.
Citizenship. 1 C. C. A. 212; 35 C. C. A. 332.

CIRCUIT COURTS OF APPEALS.
Certiorari from supreme court. 1 C. C. A. 5.
Jurisdiction. 1 C. C. A. 6; 32 C. C. A. 475.

CIRCUIT COURTS OF APPEALS—Cont'd.
Review of interlocutory decrees in patent cases. 3 C. C. A. 572; 27 C. C. A. 189; 32 C. C. A. 484.
Orders, decrees, and judgments reviewable. 13 C. C. A. 374.
Enjoining proceedings in state courts. 16 C. C. A. 90; 27 C. C. A. 575.
Conflicts of jurisdiction between federal and state courts. 22 C. C. A. 356; 26 C. C. A. 49.
Jurisdiction on habeas corpus. 25 C. C. A. 11.

CITIZENSHIP.
Of Chinese. 1 C. C. A. 212; 35 C. C. A. 332.
Of aliens under state and federal laws. 6 C. C. A. 37.
Of corporations. 6 C. C. A. 174.
Diverse citizenship as a ground of federal jurisdiction. 10 C. C. A. 249; 27 C. C. A. 298; 32 C. C. A. 479.

COLLISION.
As a peril of the sea. 19 C. C. A. 468.
Collision rules. 28 C. C. A. 532; 29 C. C. A. 368.
Signals of meeting vessels. 30 C. C. A. 630.

COLOR OF TITLE.
Tax deed as color of title. 24 C. C. A. 402.

COMMERCE.
State laws interfering with interstate or foreign commerce. 24 C. C. A. 13.

CONSTITUTIONAL LAW.
Due process of law in revenue proceedings. 8 C. C. A. 398.
Regulation of commerce by taxation. 8 C. C. A. 492.
Restrictions on grants. 14 C. C. A. 6.
Limitations of taxing power. 23 C. C. A. 515.
Interference with interstate or foreign commerce. 24 C. C. A. 13.
Constitutional limitations of municipal indebtedness. 36 C. C. A. 6.

CONTRACT LABOR.
Importation of. 1 C. C. A. 52.

CONTRACTS.
Implied obligation to pay for benefits received. 2 C. C. A. 488.
Validity as affected by public policy. 9 C. C. A. 666; 34 C. C. A. 486.
Relating to use of trade-name. 14 C. C. A. 104.
Mutuality in. 15 C. C. A. 543.
Intent as an element in offer and acceptance. 16 C. C. A. 199.
Admiralty jurisdiction over. 18 C. C. A. 347; 27 C. C. A. 530.
Of common carriers other than for carriage. 20 C. C. A. 521.
Restraining competition in bidding for public works. 28 C. C. A. 192.
For lobby services. 29 C. C. A. 446.
Breach of executory contract. 30 C. C. A. 210.

Digitized by Google

CONTRACTS—Cont'd.
Divisibility of contracts. 30 C. C. A. 467.
Of persons non compos mentis under guardianship. 34 C. C. A. 264.
Monopolistic contracts—Validity as affected by public policy. 34 C. C. A. 486.

CONTRIBUTION.
On marine loss—General average. 20 C. C. A. 357.

COPYRIGHTS.
Laches as a defense in suits for infringement. 22 C. C. A. 211; 36 C. C. A. 613.
Matter subject to copyright. 27 C. C. A. 248.

CORPORATIONS.
Citizenship for purposes of federal jurisdiction. 6 C. C. A. 174.
Status of foreign corporations. 7 C. C. A. 419.
Dissolution of foreign corporation. 7 C. C. A. 421.
Personal liability of directors for negligence. 12 C. C. A. 680; 33 C. C. A. 230.
The power of officers and directors in their individual capacity to deal with corporation. 13 C. C. A. 466.
Stockholders' liability to creditors in equity. 23 C. C. A. 315; 33 C. C. A. 23.
Exclusion, regulation, and taxation of foreign corporations. 24 C. C. A. 13.
Power to assign for benefit of creditors. 24 C. C. A. 221.
Dissolution and reincorporation of municipal corporations—Effect on indebtedness. 33 C. C. A. 506.
Foreign corporations "doing business" in state. 33 C. C. A. 585.

COSTS.
Right to costs in equity. 17 C. C. A. 368.

COUNTERFEITING.
Nonmailable matter. 30 C. C. A. 86.

CREDIT INSURANCE. 19 C. C. A. 271; 34 C. C. A. 165.

CRIMINAL LAW.
Practice on trial before jury. 26 C. C. A. 528.

CUSTOMS DUTIES.
Interpretation of commercial and trade terms in tariff laws. 18 C. C. A. 545.

DAMAGES.
For death by wrongful act. 1 C. C. A. 33.
Mental suffering as an element of damage in general. 11 C. C. A. 556.
For mental suffering for delay in delivery of telegram. 11 C. C. A. 571; 15 C. C. A. 250; 28 C. C. A. 62.
Delay in transmission of telegraphic message. 14 C. C. A. 177.
Measure of, in actions against telegraph companies. 15 C. C. A. 235; 28 C. C. A. 59.

DAMAGES—Cont'd.
In condemnation proceedings. 16 C. C. A. 468.
For personal injuries as affected by plaintiff's character and condition. 27 C. C. A. 138.

DEATH BY WRONGFUL ACT.
Damages. 1 C. C. A. 33.
Statutory provisions. 1 C. C. A. 33.

DEMURRAGE.
Quick dispatch. 14 C. C. A. 657; 21 C. C. A. 342.
Definition and general principles. 21 C. C. A. 337.

DEPOSITION.
Examinations before trial. 5 C. C. A. 594.

DIRECTORS.
Personal liability for negligence. 12 C. C. A. 680; 33 C. C. A. 230.

DISCOVERY.
Examination of party before trial. 5 C. C. A. 594.

DISSOLUTION.
Of foreign corporations. 7 C. C. A. 421.
Of municipal corporations—Effect on indebtedness. 33 C. C. A. 506.

DOMICILE.
Effect of change of domicile on the question of diverse citizenship. 10 C. C. A. 251.

DOWER.
How inchoate right extinguished. 3 C. C. A. 316.
In mines. 3 C. C. A. 316.
What estate subject to dower. 3 C. C. A. 316.
Divestiture of inchoate right by legislative action. 4 C. C. A. 295.

EMINENT DOMAIN.
Consequential and indirect damages. 16 C. C. A. 468.

EQUITY.
Right to costs. 17 C. C. A. 368.
Equitable mortgages. 18 C. C. A. 458.
Stockholders' liability to creditors of corporation. 23 C. C. A. 315; 33 C. C. A. 23.

ESTOPPEL.
As against state or United States. 16 C. C. A. 353.

EVIDENCE.
Rules of evidence in federal courts—Following state practice. 5 C. C. A. 594.
Examination of party before trial. 5 C. C. A. 602.
Excluded from bill of exceptions. 14 C. C. A. 248.
Expert testimony. 20 C. C. A. 180; 32 C. C. A. 150.
Burden of proof of negligence where passenger has been injured. 32 C. C A. 23.

Digitized by Google

EVIDENCE—Cont'd.
Evidence admissible to show injury to live stock, during transportation, through negligence or accident. 32 C. C. A. 148.

EXCEPTIONS, BILL OF.
Time of filing—When regulated by state practice. 5 C. C. A. 594.
Exclusion of evidence from. 14 C. C. A. 248.

EXECUTION.
Supplementary proceedings—Following state practice. 5 C. C. A. 594.

EXECUTIVE DEPARTMENTS.
Regulations of. 26 C. C. A. 239.

EXECUTORS AND ADMINISTRATORS.
Citizenship as affecting the jurisdiction of the federal courts. 10 C. C. A. 252.

EXTINGUISHMENT.
Of maritime liens. 17 C. C. A. 102.

FEDERAL COURTS.
Jurisdiction of circuit courts of appeals in general. 1 C. C. A. 6; 32 C. C. A. 475.
Jurisdiction as affected by state laws. 1 C. C. A. 513.
Jurisdiction of circuit court of appeals to review interlocutory decree in patent case. 3 C. C. A. 572.
Conformity of practice in common-law actions to that of state court. 5 C. C. A. 594; 27 C. C. A. 392.
Jurisdiction over corporations. 6 C. C. A. 174.
State laws as rules of decision in federal courts. 9 C. C. A. 548; 11 C. C. A. 71; 29 C. C. A. 553.
Diverse citizenship as a ground of federal jurisdiction. 10 C. C. A. 249; 27 C. C. A. 298.
Jurisdiction in cases involving federal question. 11 C. C. A. 308; 35 C. C. A. 7.
Jurisdiction and judgments of Indian courts. 11 C. C. A. 468.
Federal jurisdiction of suits against state. 13 C. C. A. 165.
Orders, decrees, and judgments reviewable in circuit court of appeals. 13 C. C. A. 374.
Jurisdiction as affected by possession of the subject-matter. 15 C. C. A. 6.
Enjoining proceedings in state courts. 16 C. C. A. 90; 27 C. C. A. 575.
Lack of jurisdiction of United States circuit court. 16 C. C. A. 507.
Removal of causes—Separable controversy. 18 C. C. A. 86; 35 C. C. A. 155.
Jurisdiction in admiralty as to matters of contract. 18 C. C. A. 347; 27 C. C. A. 530.
Jurisdiction of circuit courts as determined by the amount in controversy. 19 C. C. A. 75; 36 C. C. A. 459.

FEDERAL COURTS—Cont'd.
Jurisdiction in admiralty to enforce liens created by state laws. 21 C. C. A. 21.
Conclusiveness of judgment between federal and state courts. 21 C. C. A. 478.
Conflict of jurisdiction with state courts. 22 C. C. A. 356; 26 C. C. A. 49.
Jurisdiction in mortgage foreclosure. 24 C. C. A. 523.
Jurisdiction on habeas corpus. 25 C. C. A. 4.
Mandamus to enforce payment of judgment against municipality. 25 C. C. A. 475.
Suits by and against receivers of. 26 C. C. A. 49.
Jury trial—Province of court and jury. 26 C. C. A. 528.
Supplementary and ancillary proceedings and relief. 36 C. C. A. 195.
Probate jurisdiction. 36 C. C. A. 276.

FEDERAL QUESTIONS.
As conferring jurisdiction on United States courts. 11 C. C. A. 308; 35 C. C. A. 7.

FELLOW SERVANTS.
Who are. 8 C. C. A. 668; 9 C. C. A. 596; 31 C. C. A. 286.

FIDELITY INSURANCE. 19 C. C. A. 273.

FIRES.
As a peril of the sea. 19 C. C. A. 472.

FORECLOSURE.
In federal courts. 24 C. C. A. 523.
Distribution of proceeds. 29 C. C. A. 639.

FOREIGN CORPORATIONS.
Status under the rule of comity. 7 C. C. A. 419.
Dissolution. 7 C. C. A. 421.
Exclusion—Regulation and taxation. 24 C. C. A. 13.
What constitutes "doing business" in state. 33 C. C. A. 585.

FRAUD.
In use of trade-marks and trade-names. 17 C. C. A. 579, 657; 20 C. C. A. 165; 30 C. C. A. 380.
Nonmailable matter. 30 C. C. A. 86.

GARNISHMENT.
Of receivers. 26 C. C. A. 49.

GENERAL AVERAGE.
Marine insurance. 20 C. C. A. 357.

GUARANTY INSURANCE. 19 C. C. A. 271.

GUARDIAN AND WARD.
Citizenship as affecting the jurisdiction of the federal courts. 10 C. C. A. 253; 27 C. C. A. 300.

HABEAS CORPUS.
Jurisdiction of federal courts. 25 C. C. A. 4.

Digitized by Google

HUSBAND AND WIFE.
Liability of husband for negligences and torts of wife. 12 C. C. A. 196.
Paraphernal property. 31 C. C. A. 40.

IMPORTATION.
Of contract labor. 1 C. C. A. 52.

INDEBTEDNESS.
Constitutional and statutory limitations of municipal indebtedness. 36 C. C. A. 6.

INDEPENDENT CONTRACTORS.
Negligence of employés. 28 C. C. A. 392.

INDIANS.
Jurisdiction and judgments of Indian courts. 11 C. C. A. 468.
Citizenship of. 27 C. C. A. 298.

INFANTS.
Imputed negligence. 34 C. C. A. 4.

INFRINGEMENT.
Of patents, copyrights, and trademarks—Laches as a defense. 22 C. C. A. 211.

INJUNCTION.
Restraining proceedings in state courts. 16 C. C. A. 90; 27 C. C. A. 575.

INJURIOUS NOTICES.
Nonmailable matter. 30 C. C. A. 93.

INSANITY.
Effect on the question of suicide in insurance suits. 16 C. C. A. 623; 28 C. C. A. 284.

INSURANCE.
Conditions in policy as to time for bringing suit. 2 C. C. A. 473; 35 C. C. A. 404.
Conditions of policy—Arbitration. 9 C. C. A. 628.
Authority of insurance agent. 13 C. C. A. 292.
Waiver of prepayment of insurance premiums. 13 C. C. A. 292.
Suicide as a defense to a life policy. 16 C. C. A. 623; 28 C. C. A. 284.
Credit insurance. 19 C. C. A. 271; 34 C. C. A. 165.
Guaranty insurance. 19 C. C. A. 271.
Fidelity insurance. 19 C. C. A. 273.
Title insurance. 19 C. C. A. 278.
Marine insurance. 19 C. C. A. 465; 20 C. C. A. 357.
Waiver of condition. 27 C. C. A. 46.
Waiver by acceptance of premiums. 33 C. C. A. 369.

INTENT.
As an element in offer and acceptance of proposition. 16 C. C. A. 199.

INTERSTATE COMMERCE.
Taxation of by state. 8 C. C. A. 492.
State laws interfering with interstate commerce. 24 C. C. A. 21.

JUDGMENT.
Method of entering judgment in federal court—Following state practice. 5 C. C. A. 594.

JUDGMENT—Cont'd.
Rendition on Sunday. 12 C. C. A. 462.
Finality of judgments for purposes of review. 17 C. C. A. 238; 28 C. C. A. 482; 32 C. C. A. 475.
Conclusiveness as between federal and state courts. 21 C. C. A. 478.
Enforcement against municipality by mandamus. 25 C. C. A. 475.

JUDICIAL SALES.
On Sunday. 12 C. C. A. 462.
Restraining competition in bidding. 28 C. C. A. 192.

JURISDICTION.
Of federal courts. See "Federal Courts."
Of circuit court of appeals. 1 C. C. A. 6; 32 C. C. A. 475.
Of supreme court. 1 C. C. A. 9, 11.
Diverse citizenship as ground of federal jurisdiction. 10 C. C. A. 249; 27 C. C. A. 298.
Federal question as ground of jurisdiction. 11 C. C. A. 308; 35 C. C. A. 7.
Of Indian courts. 11 C. C. A. 468.
As affected by possession of the subject-matter. 15 C. C. A. 6.
Removal of causes—Separable controversy. 18 C. C. A. 86; 35 C. C. A. 155.
Of circuit courts as determined by the amount in controversy. 19 C. C. A. 75; 36 C. C. A. 459.
Conflict between federal and state courts. 22 C. C. A. 256.
Probate jurisdiction. 36 C. C. A. 276.

JURY.
Right to trial by jury in federal court. 5 C. C. A. 594; 26 C. C. A. 528.
Instructing jury and receiving verdict on Sunday. 12 C. C. A. 462.

LACHES.
As a defense in suits for infringement of patents, copyrights, and trademarks. 22 C. C. A. 211; 36 C. C. A. 613.

LAND DEPARTMENT.
Conclusiveness and effect of decisions. 28 C. C. A. 344.

LICENSE.
Implied rights of licensee of a patent. 25 C. C. A. 280.
Rights of licensee on train. 31 C. C. A. 164.

LIENS.
Maritime liens. 15 C. C. A. 679; 17 C. C. A. 102; 21 C. C. A. 21.
Attorney's liens. 32 C. C. A. 229.
Maritime liens for torts. 34 C. C. A. 565.

LIFE INSURANCE.
Suicide as a defense. 16 C. C. A. 623; 28 C. C. A. 284.
Waiver by acceptance of premiums. 33 C. C. A. 369.

LOTTERY.
What constitutes. 12 C. C. A. 346.
Nonmailable matter. 30 C. C. A. 90.

Digitized by Google

MAIL.
Nonmailable matter. 30 C. C. A. 79.

MANDAMUS.
In aid of appeals. 10 C. C. A. 450.
To enforce payment of judgment against municipality. 25 C. C. A. 475.

MARINE INSURANCE.
Perils of the sea. 19 C. C. A. 465.
General average. 20 C. C. A. 357.

MARITIME LIENS.
For supplies and services. 15 C. C. A. 679.
Waiver and extinguishment. 17 C. C. A. 102.
Created by state laws. 21 C. C. A. 21.
For torts. 34 C. C. A. 565.

MASTER AND SERVANT.
Who are fellow servants. 8 C. C. A. 668; 9 C. C. A. 596; 31 C. C. A. 286.
Liabilities of carriers for injuries caused by negligence or torts of servants. 10 C. C. A. 466; 27 C. C. A. 651.
Negligence of employé of independent contractor. 28 C. C. A. 392.
Negligence of both. 30 C. C. A. 678.

MASTERS IN CHANCERY.
Compensation. 27 C. C. A. 475.

MENTAL SUFFERING.
As an element of damages. 11 C. C. A. 556.
Damages for, by delay in delivering telegram. 11 C. C. A. 571; 15 C. C. A. 250; 28 C. C. A. 62.

MINES AND MINING.
Right of dower in mines. 3 C. C. A. 316.
Mining partnerships. 35 C. C. A. 515.

MONOPOLIES.
Constitutional restrictions on grant. 14 C. C. A. 6.
Monopolistic contracts—Validity as affected by public policy. 34 C. C. A. 486.

MORTGAGES.
Equitable mortgages—Agreement to give a mortgage. 18 C. C. A. 458.
Names of parties in deeds and mortgages. 23 C. C. A. 146.
Foreclosure in federal courts. 24 C. C. A. 523.
Distribution of proceeds on foreclosure. 29 C. C. A. 639.
Taxation of. 31 C. C. A. 467.

MUNICIPAL CORPORATIONS.
Liability for torts of public officers. 14 C. C. A. 534.
Enforcement of judgment against municipality by mandamus. 25 C. C. A. 475.
Dissolution and reincorporation—Effect on indebtedness. 33 C. C. A. 506.
Constitutional and statutory limitations of municipal indebtedness. 36 C. C. A. 6.

NAMES.
Of parties in deeds and mortgages. 23 C. C. A. 146.

NEGLIGENCE.
Liabilities of carriers for negligence of servants. 10 C. C. A. 466; 27 C. C. A. 651.
Of wife—Liability of husband. 12 C. C. A. 196.
Personal liability of directors. 12 C. C. A. 680; 33 C. C. A. 230.
In transmission of telegram. 14 C. C. A. 177.
Of employés. 28 C. C. A. 392.
Duty of railroads to give warning signals at crossing. 29 C. C. A. 90.
Of both master and servant. 30 C. C. A. 678.
Injuries to trespasser on train. 31 C. C. A. 76.
Injuries to one traveling on pass. 31 C. C. A. 164.
Injuries to licensee on train. 31 C. C. A. 164.
Injuries to servant. 31 C. C. A. 286.
Burden of proof where passengers have been injured. 32 C. C. A. 23.
Evidence admissible to show injury to live stock through negligence or accident during transportation. 32 C. C. A. 148.
Imputed to infant. 34 C. C. A. 4.
Sleeping-car companies. 34 C. C. A. 386.

NEUTRALITY LAWS.
Object and scope of neutrality law. 28 C. C. A. 662.

NEW TRIAL.
When granted in federal courts. 5 C. C. A. 594.

NON COMPOS MENTIS.
Contracts of persons non compos mentis under guardianship. 34 C. C. A. 264.

NONMAILABLE MATTER.
Obscene matter. 30 C. C. A. 79.
Frauds and counterfeiting. 30 C. C. A. 86.
Lotteries. 30 C. C. A. 90.
Injurious notices. 30 C. C. A. 93.
Threatening and dunning postal cards. 30 C. C. A. 94.

NONRESIDENTS.
Taxation of property. 31 C. C. A. 467.

OBSCENE MATTER.
Nonmailable matter. 30 C. C. A. 79.

OFFICE AND OFFICER.
Torts of public officers. 14 C. C. A. 534.

PARAPHERNAL PROPERTY.
What constitutes. 31 C. C. A. 40.

PARENT.
Death of child by wrongful act—Damages. 1 C. C. A. 34.

Digitized by Google

PARTIES.
To actions in federal courts. 5 C. C. A. 594; 27 C. C. A. 299.
Citizenship as affecting the jurisdiction of the federal courts. 10 C. C. A. 254; 27 C. C. A. 298; 32 C. C. A. 479.
Names of, in deeds and mortgages. 23 C. C. A. 146.

PARTNERSHIP.
Mining partnerships. 35 C. C. A. 515.

PASSENGERS.
Duty of carrier to protect from dangerous fellow passengers. 4 C. C. A. 231.
Right of carrier to restrain or expel disorderly passenger. 4 C. C. A. 231.
Duties and liabilities of sleeping-car companies towards. 10 C. C. A. 335; 34 C. C. A. 386.
Rights against carriers for injuries caused by negligence or torts of servants. 10 C. C. A. 466.
Rights of persons traveling on a pass. 31 C. C. A. 164.
Burden of proof of negligence for injuries to. 32 C. C. A. 23.
Limitation of carrier's liability for injuries to passengers. 32 C. C. A. 301.
Limitation of carrier's liability for injuries to passenger by condition on ticket. 32 C. C. A. 302.
Limitation of liability by carrier for injuries to passenger traveling on pass. 32 C. C. A. 305.
Limitation of carrier's liability for injuries to baggage. 32 C. C. A. 308.

PATENTS FOR INVENTIONS.
Effect of previous adjudication on circuit court of appeals. 3 C. C. A. 565; 27 C. C. A. 427; 32 C. C. A. 475.
Review of interlocutory decree granting or continuing injunction in circuit court of appeals. 3 C. C. A. 572; 27 C. C. A. 189; 32 C. C. A. 484.
Pleading in infringement suits. 19 C. C. A. 595.
To public lands—Cancellation. 22 C. C. A. 38.
Laches as a defense in suits for infringement. 22 C. C. A. 211; 36 C. C. A. 613.
Power of patentee to control his invention. 25 C. C. A. 280.

PAYMENT.
Implied obligation to pay for benefits received. 2 C. C. A. 488.

PERILS OF THE SEA.
Damages to ship and cargo by vermin. 18 C. C. A. 231; 19 C. C. A. 473.
Damages to ship and cargo through various causes. 19 C. C. A. 465.

PLEADING.
In common-law actions in federal courts. 5 C. C. A. 594.

PLEADING—Cont'd.
Averments of citizenship to show jurisdiction in federal courts. 10 C. C. A. 261.
In patent infringement suits. 19 C. C. A. 595.

POST OFFICE.
Nonmailable matter. 30 C. C. A. 79.

PRACTICE.
As regulated by state laws. 1 C. C. A. 515; 5 C. C. A. 594; 9 C. C. A. 548.

PREJUDICE.
As ground for removal of causes. 8 C. C. A. 95.

PROBATE.
Jurisdiction of federal courts. 36 C. C. A. 276.

PUBLIC LANDS.
Liability of purchaser holding equitable title to state taxation. 4 C. C. A. 196.
Not subject to state taxation. 4 C. C. A. 196.
Decisions of land department—Their conclusiveness and effect. 22 C. C. A. 38; 28 C. C. A. 344.

PUBLIC POLICY.
As affecting contracts. 9 C. C. A. 666.
Contracts for lobby services. 29 C. C. A. 446.
As affecting monopolistic contracts. 34 C. C. A. 486.

RAILROADS. (See "Carriers.")
When land grants taxable. 4 C. C. A. 196.
Duty to give warning signals at crossing. 29 C. C. A. 90.

RECEIVERS.
Citizenship as affecting the jurisdiction of the federal courts. 10 C. C. A. 253.
Actions by and against. 26 C. C. A. 49.
Nature of certificates. 26 C. C. A. 350.

REMOVAL OF CAUSES.
As restricted by state laws. 1 C. C. A. 515.
For prejudice or local influence. 8 C. C. A. 95.
Separable controversy. 18 C. C. A. 86; 35 C. C. A. 155.
Actions against federal receivers. 26 C. C. A. 49.

REVIEW, BILL OF.
Necessity of leave to file after decisions on appeal. 4 C. C. A. 72.

SALE.
Of patent. 25 C. C. A. 280.

SALVAGE.
Awards in federal courts. 30 C. C. A. 280.

SEPARABLE CONTROVERSIES.
As ground for removal of cause. 18 C. C. A. 86; 35 C. C. A. 155.

Digitized by Google

SHAREHOLDERS.
In national banks. 15 C. C. A. 130.

SHIPPING.
Quick dispatch. 14 C. C. A. 657; 21 C. C. A. 342.
Implied warranty of seaworthiness. 15 C. C. A. 388.
Damages to ships and cargoes by vermin. 18 C. C. A. 231; 19 C. C. A. 473.
Admiralty jurisdiction over contracts. 18 C. C. A. 347; 27 C. C. A. 530.
Loss by perils of the sea. 19 C. C. A. 465.
General average. 20 C. C. A. 357.
Demurrage. 21 C. C. A. 337.

SIGNALS.
At railroad crossings. 29 C. C. A. 90.

SLEEPING-CAR COMPANIES.
Their duties and liabilities towards their passengers. 10 C. C. A. 335; 34 C. C. A. 386.

STATE COURTS.
Proceedings enjoined by federal courts. 16 C. C. A. 90; 27 C. C. A. 575.
Jurisdiction of state courts to enforce maritime liens under state laws. 21 C. C. A. 21.
Conclusiveness of judgments between federal and state courts. 21 C. C. A. 478.
Conflict of jurisdiction with federal courts. 22 C. C. A. 356.

STATES.
Federal jurisdiction in suit against state. 13 C. C. A. 165.
Estoppel against. 16 C. C. A. 353.

STATUTES.
Construction of statutes. 11 C. C. A. 71.
Constitutional and statutory limitations of municipal indebtedness. 36 C. C. A. 6.
Statutory exemptions of building and loan associations from operation of usury laws. 36 C. C. A. 343.

STOCKHOLDERS.
Liability to creditors of corporation. 23 C. C. A. 315; 33 C. C. A. 23.

SUICIDE.
As a defense to a suit for life insurance. 16 C. C. A. 623; 28 C. C. A. 284.

SUNDAY.
As dies non juridicus. 12 C. C. A. 462.

SUPREME COURT.
Certiorari to circuit court of appeals. 1 C. C. A. 5.
Jurisdiction. 1 C. C. A. 9, 11.

TARIFF LAWS.
Interpretation of commercial and trade terms. 18 C. C. A. 545.

TAXATION.
Of railroad land grants. 4 C. C. A. 196.
Of equitable title to public lands. 4 C. C. A. 196.
Lands of the United States not subject to state taxation. 4 C. C. A. 196.
Due process of law. 8 C. C. A. 398.
Notice of equalization. 8 C. C. A. 400.
Forfeiture for nonpayment. 8 C. C. A. 401.
Regulation and taxation of interstate commerce by state. 8 C. C. A. 492; 24 C. C. A. 21.
Limitations of taxing power from mutual independence of federal and state governments. 23 C. C. A. 515.
Of foreign corporations. 24 C. C. A. 13.
Tax deed as color of title. 24 C. C. A. 402.
Of intangible property of nonresidents. 31 C. C. A. 467.

TELEGRAPH COMPANIES.
Measure of damages in actions against. 11 C. C. A. 556.
Damages for mental suffering from delay in delivering telegram. 11 C. C. A. 571; 15 C. C. A. 250; 28 C. C. A. 62.
Delay in transmission of message. 14 C. C. A. 177.

THREATENING POSTAL CARDS.
Nonmailable matter. 30 C. C. A. 94.

TITLE INSURANCE. 19 C. C. A. 278.

TORTS.
Liabilities of carriers for negligence and torts of servants. 10 C. C. A. 466; 27 C. C. A. 651.
Of wife—Liability of husband. 12 C. C. A. 196.
Of public officers. 14 C. C. A. 534.
As affecting demurrage. 21 C. C. A. 345.
Maritime liens for torts. 34 C. C. A. 565.

TRADE-MARKS AND TRADE-NAMES.
Contracts relating to use. 14 C. C. A. 104.
Assignment of right to use a person's name. 17 C. C. A. 579.
Right to use one's own name. 17 C. C. A. 579; 27 C. C. A. 357.
Use of corporate and firm names. 17 C. C. A. 579; 27 C. C. A. 357.
Use of geographical names. 17 C. C. A. 657; 35 C. C. A. 242.
Unfair competition. 20 C. C. A. 165; 30 C. C. A. 376.
Laches as a defense in suits for infringement. 22 C. C. A. 211; 36 C. C. A. 613.
What names subject to exclusive use as trade-names. 27 C. C. A. 357.
Misleading or false labels. 29 C. C. A. 250.
Abandonment. 33 C. C. A. 294.

Digitized by Google

TRESPASSER.
Rights of trespasser on train. 31 C. C. A. 76.

TRIAL.
Right to jury in federal court. 5 C. C. A. 603; 26 C. C. A. 528.
Instructing jury and receiving verdict on Sunday. 12 C. C. A. 462.

TRUSTEES.
Citizenship as affecting the jurisdiction of the federal courts. 10 C. C. A. 252; 27 C. C. A. 300.

TRUSTS.
Assets of corporation when trust fund for creditors. 23 C. C. A. 315.

UNITED STATES.
Estoppel against. 16 C. C. A. 353.
Assignment of claims and government contracts. 22 C. C. A. 650.

USURY.
Statutory exemptions of building and loan associations from operation of usury laws. 36 C. C. A. 343.

WAIVER.
Of prepayment of insurance premiums. 13 C. C. A. 292.

WAIVER—Cont'd.
Of maritime liens. 17 C. C. A. 102.
Of conditions of insurance. 27 C. C. A. 46.
Of defense by acceptance of premiums. 33 C. C. A. 369.

WAREHOUSEMEN.
Liability of carriers as. 20 C. C. A. 529.

WIFE.
Death of husband by wrongful act—Damages. 1 C. C. A. 33.
Liability of husband for torts of. 12 C. C. A. 196.

WITNESS.
Competency in federal courts—Following state practice. 5 C. C. A. 594; 21 C. C. A. 278.
Method of summoning. 5 C. C. A. 594.
Comments of counsel in argument on failure to produce. 13 C. C. A. 589.

WRITS.
Form and service of process. 5 C. C. A. 594.
Issue and service on Sunday. 12 C. C. A. 462.

Digitized by Google

NOTES IN THIS VOLUME.

Page

Constitutional and Statutory Limitations of Municipal Indebtedness 6

Supplementary and Ancillary Proceedings and Relief in Federal Courts 195

Probate Jurisdiction of Federal Courts 276

Statutory Exemptions of Building and Loan Associations from the Operation of the Usury Laws 343

Jurisdiction of Circuit Courts as Determined by the Amount in Controversy 459

Supplementary to note to Auer v. Lombard, 19 C. C. A. 75.

Laches as a Defense in Suits for Infringement of Patents, Copyrights, and Trade-Marks 613

Supplementary to note to Taylor v. Spindle Co., 22 C. C. A. 211.

Digitized by Google

CASES

ARGUED AND DETERMINED

IN THE

UNITED STATES CIRCUIT COURTS OF APPEALS.

(94 Fed. 916.)

CITY OF HELENA v. MILLS.

(Circuit Court of Appeals, Ninth Circuit. May 2, 1899.)

No. 510.

MUNICIPAL CORPORATIONS — CONSTITUTIONAL LIMITATION OF INDEBTEDNESS — CONTRACT FOR WATER SUPPLY.

Under the constitution of Montana, which limits the indebtedness of municipal corporations, and provides that all obligations in excess of the amount so limited shall be void, a city not authorized by statute to levy and collect a special tax for water purposes, and which is already indebted beyond the constitutional limit, has no power to bind itself by a contract for a supply of water to be furnished for municipal purposes; and a claim accrued for water furnished under such a contract is within the constitutional prohibition, and cannot be enforced.[1]

In Error to the Circuit Court of the United States for the District of Montana.

It is sought by the writ of error in this case to review a judgment rendered by the circuit court upon the pleadings in an action brought by the defendant in error to recover for water furnished to the city of Helena under a contract made in pursuance of an ordinance of the city approved by the mayor on August 17, 1897.

The ordinance provided, among other things, that James H. Mills, as the receiver of the Helena Consolidated Water Company, should furnish "a full, ample, sufficient supply of good, pure, wholesome and clear water through said plant and system and the hydrants thereto connected, to the city of Helena for fire, sewerage and other municipal purposes, for a period of five years from the first day of August, A. D. 1897." The ordinance further provided that if, within 30 days after its passage, the receiver should file with the city clerk his acceptance of its terms, it should go into effect and operate as a contract between the parties. The receiver accepted the ordinance, and has since supplied the city with water. In May, 1898, the city refused to pay therefor. The complaint alleged these facts, and further stated that the water plant operated by the receiver is the only one in the city of Helena, and was the only one at the time of the passage of the ordinance; that no other person or corporation was able at the time when said ordinance was passed, or for a long time prior thereto, or at any time since, to furnish water to the city of Helena for the pur-

---

[1] See note at end of case.

Digitized by Google

poses specified in the ordinance; that the city has since the passage of the ordinance levied and collected taxes sufficient to meet the amount provided for in the ordinance. The answer admitted all of said facts, but alleged that at the time when the contract was entered into, and at all times since, the city of Helena could have entered into a contract with responsible parties to supply it with water within six months from the making of such contract, and that within such period the city could have been supplied with water from sources other than those controlled by the defendant in error, and that the contract was entered into without advertising for bids, and that, had the city asked for bids, and offered to enter into a contract with the successful bidder to supply it with water within six months thereafter, responsible parties other than the defendant in error would have bid; that prior to the ordinance the receiver and the water company had for more than two years supplied the city with water without any express contract. The answer further alleged that the city is, and ever since the passage of said ordinance has been, indebted beyond the constitutional limit; that during none of such time has the assessed value of property in the city exceeded $12,656,783, nor the aggregate indebtedness been less than $559,704. A judgment was rendered upon the pleadings in favor of the plaintiff in the action.

T. J. Walsh and Edward Horsky, for plaintiff in error.

Clayberg, Corbett & Gunn, for defendant in error.

Before GILBERT and ROSS, Circuit Judges, and HAWLEY, District Judge.

GILBERT, Circuit Judge, after stating the facts as above, delivered the opinion of the court.

It is contended that the contract between the city of Helena and the receiver of the water company is void—First, because it was entered into without asking for bids, as required by section 4807 of the Political Code of Montana; and, second, because the city was indebted beyond the constitutional limit when the contract was made,—and that, even if the contract is not void, the judgment could not lawfully be rendered against the city, because it was indebted beyond the constitutional limit at the time when the indebtedness became due. The constitution of Montana, which was in force when the contract was made, provides as follows (article 13, § 6):

"No city, town, township or school district shall be allowed to become indebted in any manner or for any purpose to an amount, including existing indebtedness, in the aggregate exceeding three per centum of the value of the taxable property therein, to be ascertained by the last assessment for the state and county taxes previous to the incurring of such indebtedness, and all bonds or obligations in excess of such amount given by or on behalf of such city, town, township or school district shall be void."

From the pleadings it appears that at the time of making the contract, and ever since, the actual indebtedness exceeded $559,000, whereas the permitted indebtedness was no more than $379,703.49. Did the amount due, and for which judgment was recovered, constitute an indebtedness against the city, within the meaning of that term as it is used in the constitution? The question has heretofore been twice presented to the supreme court of Montana. The case of Davenport v. Kleinschmidt, 6 Mont. 502, 13 Pac. 249, involved the validity of a contract for a water supply made by the city of Helena. The charter of the city at that time prescribed "that said city shall not be authorized to incur any indebtedness on behalf of said city for any purpose whatever to exceed the sum of $20,000." At the time

Digitized by Google

of making the contract the bonded indebtedness of the city was $19,500, and its floating debt, consisting of outstanding warrants, was $15,000. The court held that no further indebtedness could be incurred until some of the outstanding debt had been discharged. In reaching that conclusion the court considered the nature of the obligation incurred by the city for its annual supply of water, and held that it was an indebtedness, within the meaning of the provision of the charter. It distinguished that case from cases in which a special provision had been made for levying a special tax to meet water rental, as in the case of Water Co. v. Woodward, 49 Iowa, 61, and said:

"In all of the water cases arising in the state of Iowa, we are met with the general statute which authorizes all cities to contract for the erection of waterworks, and to pay for the water used by a special fund raised by a special annual tax not to exceed five mills on the dollar. Such contracts with water companies were held not to create a debt against the cities, because the water companies could never have any general claim against cities, but were held to look to the special fund alone."

After the decision was rendered in that case an act was passed by the legislature of Montana providing for the levy of a special tax of 1½ per cent. upon the assessable property to create a special fund for the payment of bills for fire and water. While that statute was in force, and while Montana was still a territory, the city of Great Falls entered into a contract for the supply of water; and in the case of State v. City of Great Falls, 19 Mont. 518, 49 Pac. 15, the question arose whether the liability so incurred was an indebtedness, within the meaning of the act of congress limiting the indebtedness of municipal corporations in the territories. The act of congress provided as follows:

"That no political or municipal corporation, county, or other subdivision in any of the territories of the United States, shall ever become indebted in any manner or for any purpose to any amount in the aggregate, including existing indebtedness, exceeding four per centum on the value of the taxable property within such corporation, county, or subdivision, to be ascertained by the last assessment for territorial and county taxes previous to the incurring of such indebtedness." 24 Stat. 171.

The court said:

"The contract was entered into in contemplation of a special fund being created by the city to meet liabilities incurred thereunder, and the legislature, in said act, contemplated at the time that cities of the territory should pay for water used by them for sewerage and fire purposes from taxes levied and collected for that specific purpose. The case of Davenport v. Kleinschmidt, supra, does not disapprove the Iowa cases, holding that, because a general law provided for payment from a special fund, a liability incurred by a city to supply its inhabitants with water was not a debt, in the sense of the term as employed in the constitution of Iowa. * * * It follows from this view of the case that neither under the organic act of the territory of Montana nor the constitution of the state of Montana is or was the liability incurred by the city of Great Falls under Ordinance 17 a debt, in the sense prohibited."

But when the Montana Codes were adopted, in the year 1895, the statute which controlled the decision in the Great Falls Case was repealed. There was no longer a statute creating a special fund for the payment of water rentals. The conditions again existed under which the ruling had been made in Davenport v. Klein-

Digitized by Google

schmidt. The provisions of the law which governed the city when the present indebtedness was incurred are the following (Pol. Code, § 4872):

"The council must, on the second Monday in August in each year, by resolution, determine the amount of city or town taxes for all purposes, to be levied and assessed on the taxable property in the town or city for the current year, and the city clerk must at once certify to the city treasurer a copy of such resolution, and the city treasurer must collect the taxes as in this article provided."

And Pol. Code, § 4814:

"The amount of taxes to be assessed and levied for general municipal or administrative purposes must not exceed one per centum on the assessed value of the taxable property of the city or town, and the council may distribute the money into such funds as are prescribed by ordinance."

Recurring to the two decisions of the Montana courts, it may be said, in brief, that Davenport v. Kleinschmidt is authority for the proposition that a liability incurred for water rental is a debt, within the prohibition of the statute, for it is payable out of the general taxes levied and collected for the current expenses of the city, and that the Great Falls Case is authority for the proposition that such liability is not such an indebtedness, if express authority has been given the city to levy a special tax, and thus create a separate fund for the payment thereof. The defendant in error contends that the provisions of the general law of Montana governing cities at the time when the contract involved in the present case was entered into are equivalent to a provision for a special tax, and the creation of a special fund for the payment of water rental, for the reason that the council is given the authority to estimate the current expenses of each year, and to raise a general tax sufficient to meet them all, which would, of course, include rent for water, and because the ordinance under which the contract was made appropriates out of such general fund each year an amount sufficient to pay the annual sum which was agreed to be paid for water. It is argued that there is no difference between a fund arising from the levy of a special tax for fire and water purposes, and a fund appropriated for those purposes out of moneys received from taxes levied for general purposes. The same argument was applicable to the case of Davenport v. Kleinschmidt. The city of Helena, at the time when the contract was made in that case, had the power—as, indeed, have cities generally—to estimate its current expenses, and to include therein a tax for water and fire purposes. It also had the authority by ordinance to appropriate out of such taxes a sum sufficient to meet its contracts for such purposes. But those facts, in the opinion of the court, created no exception to the limitation of the charter. In the later case of the City of Great Falls the doctrine of Davenport v. Kleinschmidt was not questioned, but was approved. The Great Falls Case was distinguished from the former case on the ground which we have just indicated. Both cases are in harmony with the general doctrine established by the decided weight of authority,—that the contract of a municipal corporation for a useful and necessary thing, such as water or light, which is to be paid for annually as furnished, does not create an indebtedness for the aggregate sum of all the

Digitized by Google

yearly payments since the debt of each year comes into existence only when the annual compensation has been earned, but that, if the amount agreed to be paid in any installment in compliance with such contract transcends the amount of permitted indebtedness, the city is not liable therefor. City of Walla Walla v. Walla Walla Water Co., 19 Sup. Ct. 77; Grant v. City of Davenport, 36 Iowa, 396; City of East St. Louis v. East St. Louis Gaslight & Coke Co., 98 Ill. 415; Merrill Railway & Lighting Co. v. City of Merrill, 80 Wis. 358, 49 N. W. 965; Prince v. City of Quincy, 105 Ill. 138; Foland v. Town of Frankton, 142 Ind. 546, 41 N. E. 1031; Smith v. Dedham, 144 Mass. 177, 10 N. E. 782; Wade v. Borough of Oakmont (Pa. Sup.) 30 Atl. 959. Such was the decision of this court, also, in the case of Keihl v. City of South Bend, 22 C. C. A. 618, 76 Fed. 921, where it was held that a contract entered into by a city at a time when the full amount of its permitted indebtedness had been incurred did not of itself create an indebtedness in contravention of the state constitution, but created a condition upon which such a debt might arise, and that the city was not liable for an annual installment thereunder which came due at a time when the city was taxed beyond the limit. In the case of City of Walla Walla v. Walla Walla Water Co., 19 Sup. Ct. 77, the supreme court had under consideration a provision of the charter of the city of Walla Walla, in the state of Washington, which limited the indebtedness of the city to the sum of $50,000. On March 15, 1887, an ordinance was passed granting to the water company for the period of 25 years the right to place and maintain mains and pipes in the streets of the city for the purpose of furnishing the inhabitants with water; the city to pay therefor each year the sum of $1,500. After the contract had been in force for about six years an ordinance was passed to provide for the construction of a system of waterworks to supply the city and its inhabitants with water. The water company brought suit to enjoin the infringement of its rights, and in its answer to the bill the city set up the defense that its contract with the water company was void because it created an indebtedness in excess of the charter limitation. The supreme court, after reviewing the authorities, said:

"But we think the weight of authority, as well as of reason, favors the more liberal construction that a municipal corporation may contract for a supply of water or gas, or a like necessary, and may stipulate for the payment of an annual rental for the gas or water furnished each year, notwithstanding the aggregate of its rentals during the life of the contract may exceed the amount of the indebtedness limited by the charter. There is a distinction between a debt and a contract for a future indebtedness to be incurred provided the contracting party perform the agreement out of which the debt may arise. * * * The obvious purpose of limitations of this kind in municipal charters is to prevent the improvident contracting of debts for other than the ordinary current expenses of the municipality. It certainly has no reference to debts incurred for the salaries of municipal officers, members of the fire and police departments, school teachers, or other salaried employés, to whom the city necessarily becomes indebted in the ordinary conduct of municipal affairs, and for the discharge of which money is annually raised by taxation. For all purposes necessary to the exercise of their corporate powers, they are at liberty to make contracts, regardless of the statutory limitation,—provided, at least, that the amount to be raised each year does not exceed the indebtedness allowed by the charter. Among these purposes is the prevention of fires, the purchase of fire engines,

Digitized by Google

the pay of firemen, and the supply of water by the payment of annual rentals therefor."

In that decision the supreme court construed no more liberally the powers of municipal corporations to enter into contracts for supplies of necessaries than did this court in Keihl v. City of South Bend. It will be noted that in the language of the opinion so quoted a limitation is placed upon the extent of the indebtedness which may be incurred in the face of the statutory prohibition. Cities are declared to be at liberty to make certain kinds of contracts, regardless of the limitation, provided "that the amount to be raised each year does not exceed the indebtedness allowed by the charter." The present case does not meet the requirement of the test so established. The amount to be raised each year under the contract between the city and the receiver exceeded the total indebtedness allowed by the law of Montana. At the time when the debt for which this suit was brought was contracted, and when it fell due, the city was indebted in an amount largely in excess of the statutory limit. As the judgment must be reversed upon this ground, it becomes unnecessary to consider the other question which the record presents. The judgment is reversed, and the cause is remanded for further proceedings not inconsistent with the foregoing opinion.

NOTE.

Constitutional and Statutory Limitations of Municipal Indebtedness.

I. OPERATION AND EFFECT OF CONSTITUTIONAL PROVISIONS.

[a] Constitutional and statutory restrictions upon the amount of bonded indebtedness that a municipality may incur are inapplicable to bonded debts created before the passage of any restrictions as to such indebtedness.

—(Ky. App. 1894) Aydelett v. Town of South Louisville, 26 S. W. 717; Ex parte City of Lexington, 28 S. W. 665, 96 Ky. 258; (1895) City of Ludlow v. Board of Education of City of Ludlow, 29 S. W. 854; (Wyo. Sup. 1895) Miller v. School Dist. No. 3, 39 Pac. 879.

[b] (U. S. C. C. A. 4th Circuit, 1895) A city charter permitting the city to issue bonds in aid of the construction of railroads to any amount is not in conflict with Const. S. C. art. 9, § 17, limiting the indebtedness of municipal corporations to 8 per cent. of their taxable property, since the charter provision will operate only within the constitutional limit.—Town of Darlington v. Atlantic Trust Co., 16 C. C. A. 28, 68 Fed. 849.

[c] (Ky. Sup. 1894) Const. § 158, providing that a city of the fourth class shall not incur an indebtedness exceeding 5 per cent. of its taxable value therein, took effect immediately on the adoption of the constitution; and therefore a contract by such a city, incurring an indebtedness in excess of the 5 per cent. limit, made after the adoption of the constitution, but before the formal classification of the cities into classes by the general assembly as required by the constitution, is void.—Beard v. City of Hopkinsville, 24 S. W. 872, 94 Ky. 239.

[d] (N. J. Sup. 1894) The amount of debt which a city can incur in the purchase of waterworks under the acts (Revision, p. 723, § 43; Supp. Revision, p. 669, § 783) is not restricted by a limitation of indebtedness contained in the city charter, but by the limitation in the acts.—Stroud v. Water Co., 28 Atl. 578, 56 N. J. Law, 422.

[e] (S. C. Sup. 1897) The act of March 2, 1896, authorizing cities to build and operate a system of waterworks and electric lights, and to issue bonds for the cost thereof, is, in effect, an amendment to a charter limiting the

Digitized by Google

indebtedness of the city to a specified amount.—Todd v. City of Laurens, 26 S. E. 682, 48 S. C. 395.

[f] (Wash. Sup. 1892) The constitutional prohibition against a city's incurring any indebtedness in excess of 1½ per cent. of the valuation of the taxable property within its limits is not the source of the city's power to incur indebtedness, but a limitation on such power; and hence a newly-incorporated city has the power to incur indebtedness before the value of its taxable property is ascertained, the presumption being that it is acting properly in so doing.—Childs v. City of Anacortes, 32 Pac. 217, 5 Wash. 452.

II. Debts Embraced Within the Limitation.

1. *In General.*

[a] Issuing new bonds to fund a like amount of outstanding bonds and warrants does not create an "indebtedness," within Const. art. 13, § 6, limiting the amount of indebtedness which a municipality may incur.

—(Mont. Sup. 1896) Palmer v. City of Helena, 47 Pac. 209, 19 Mont. 61;
(Or. Sup. 1897) Morris & Whitehead v. Taylor, 49 Pac. 660, 31 Or. 62;
(Wyo. Sup. 1895) Miller v. School Dist. No. 3, 39 Pac. 879.

[b] Const. Ind. art. 13, limiting municipal indebtedness, furnishes no defense to an action upon a contract by a municipality to pay for services to be rendered in effecting a compromise of its debt.

—(U. S. Sup. 1880) Williams v. Louisiana, 103 U. S. 637;
(Ind. Sup. 1888) City of Logansport v. Dykeman, 17 N. E. 587, 116 Ind. 15.

[c] Const. art. 11, § 18, prohibiting a city from incurring any liability exceeding in any one year the revenue provided for such year, includes an implied liability.

—(U. S. Sup. 1885) City of Litchfield v. Ballou, 5 Sup. Ct. 820, 114 U. S. 190;
(Cal. Sup. 1899) Buck v. City of Eureka, 56 Pac. 612.

[d] A judgment against a school district on orders issued in payment of other valid orders, though rendered at a time when the outstanding obligations of the district are in excess of the constitutional limit, does not create an indebtedness, within the inhibition of the constitution.

—(U. S. C. C. A. 8th Circuit, 1897) Board v. Platt, 25 C. C. A. 87, 79 Fed. 567;
(Iowa Sup. 1897) Thompson v. Independent School Dist., 70 N. W. 1093, 102 Iowa, 94.

[e] The constitutional provision limiting the liability which a city may incur in any manner includes both bonded and floating indebtedness.

—(Colo. Sup. 1886) People v. May, 10 Pac. 641, 9 Colo. 80;
(Mont. Sup. 1887) Davenport v. Kleinschmidt, 13 Pac. 249, 6 Mont. 502.

[f] A note for $1,000, given by a city in payment for waterworks material, and payable, with interest, two years after date, is a debt within the meaning of constitutional limitation, forbidding cities to contract debts without at the same time providing for taxation for their payment.

—(Pa. Com. Pl. 1895) Nankivil v. Yeosock, 7 Kulp, 518;
(Tex. Sup. 1888) City of Terrell v. Dissaint, 9 S. W. 593, 71 Tex. 770.

[g] (Ind. Sup. 1890) Where a city pays cash for work done upon the street and alley crossings, while making street improvements authorized by the act of March 8, 1889, the constitutional provision is not violated, though the cash paid, added to the indebtedness of the city, exceeds the amount limited.—Quill v. City of Indianapolis, 23 N. E. 788, 124 Ind. 292.

[h] (Ky. App. 1894) Const. § 157, providing that no city, town, or municipality shall become indebted "in any manner, or for any purpose," to an amount exceeding, in any year, the income and revenue of such year, without the assent of two-thirds the voters thereof, voting at an election to be held for that purpose, applies to an indebtedness for school purposes as well as strictly municipal purposes.—City Council of Richmond v. Powell, 27 S. W. 1.

[i] (N. Y. Sup. 1898) Under general municipal laws (Laws 1892, c. 685, § 5), the term "funded debts" includes all municipal indebtedness evidenced

Digitized by Google

by bonds payable at a time beyond the current fiscal year of their issue, with periodical payment of interest, and where provision is made for payment by future taxation, and the quasi pledging of the municipal revenue.—People v. Carpenter, 52 N. Y. Supp. 781.

2. Involuntary Debts.

[a] (Cal. Sup. 1860) The restriction applies only to voluntary acts or contracts of the city, and not to liabilities which the law may cast upon it arising from torts, trespasses, or mistakes.—McCracken v. City of San Francisco, 16 Cal. 591.

[b] (Cal. Sup. 1893) The limitation applies only to debts incurred by the city. The liability of a city for the salary of a municipal officer, whose office has been created, and whose salary has been fixed, by statute, is not within the limitation, as such liability is established by the legislature.—Lewis v. Widber, 33 Pac. 1128, 99 Cal. 412.

[c] (Ga. Sup. 1887) A debt arising from a breach of contract is not within the constitutional provisions limiting indebtedness.—City of Conyers v. Kirk, 3 S. E. 442, 78 Ga. 480.

[d] (Okl. Sup. 1897) The limitation upon municipal indebtedness imposed by 24 Stat. 171, c. 818, § 4, applies to any indebtedness created or imposed by the legislature, as well as that incurred by the action of the corporate authorities.—Martin v. Territory, 48 Pac. 106, 5 Okl. 188.

[e] (Or. Sup. 1889) Const. Or., providing "that no county shall create any debts or liabilities which shall, singly or in the aggregate, exceed the sum of five thousand dollars," only applies to debts and liabilities beyond said sum which a county, in its corporate character, and as an artificial person, voluntarily creates.—Grant Co. v. Lake Co., 21 Pac. 447, 17 Or. 453.

[f] (Or. Sup. 1898) Hill's Ann. Laws, § 4140, authorizing county courts, in their discretion, to defray expenses of building or repairing bridges on county and state roads; and section 896, subd. 1, authorizing county courts to provide for the erection and repair of court houses and other buildings for the use of the county,—do not authorize expenditures for such purposes where the indebtedness of the county exceeds the limit fixed by Const. art. 11, § 10.—Municipal Sec. Co. v. Baker Co., 54 Pac. 174.

[g] (Utah Sup. 1897) The limitation includes debts incurred by operation of law, such as salaries of officers and liabilities of the county for the negligence of its officers and agents, as well as debts arising from express contract.—Fritsch v. Board, 47 Pac. 1026, 15 Utah, 83.

[h] (Wash. Sup. 1897) Under 2 Hill's Code, § 674, requiring an officer to issue an order in payment of judgments for the "recovery of money or damages," the fact that the city has reached its limit of indebtedness would not justify the officer in withholding the warrant, where the judgment is for personal injuries caused by negligence.—Lorence v. Bean, 50 Pac. 582, 18 Wash. 36.

[i] (Wyo. Sup. 1896) The limitation applies to all debts of the county, whether compulsory obligations imposed by law for salaries, or bounties or voluntary obligations entered into for any purpose.—Railroad Co. v. Baker, 45 Pac. 494.

3. General and Special Purposes—Current Expenses.

[a] A restriction on the power of a city to become indebted in any manner or for any purpose includes every liability, no matter how urgent or useful.

—(U. S. Sup. 1885) City of Litchfield v. Ballou, 5 Sup. Ct. 820, 114 U. S. 190; (1889) Lake Co. v. Rollins, 9 Sup. Ct. 651, 130 U. S. 662;
(Colo. Sup. 1887) People v. May, 12 Pac. 838, 9 Colo. 404.

[b] A city indebted to the amount allowed by law is prohibited from issuing an order, even for current expenses, where there are no funds in the treasury which may be applied to its payment.

—(Ill. Sup. 1883) Prince v. City of Quincy, 105 Ill. 138;
(Ind. Sup. 1883) Sackett v. City of New Albany, 88 Ind. 473;
(Iowa Sup. 1876) Trench v. City of Burlington, 42 Iowa, 614.

Digitized by Google

[c] The limitation of the power of a city to borrow money for general purposes does not restrict its right to contract for special improvements authorized by its charter, such as grading and paving streets.
—(U. S. Sup. 1877) Hitchcock v. Galveston, 96 U. S. 341;
(Tex. Sup. 1881) City of Galveston v. Heard, 54 Tex. 420.

[d] (Ill. App. 1890) The salary of a health officer is an indebtedness, within the meaning of Const. Ill. art. 9, § 12, fixing the limit of indebtedness which may be incurred by a city.—Norton v. City of East St. Louis, 36 Ill. App. 171.

[e] (Iowa Sup. 1897) The obligation created by a contract made by a city for water for fire protection is not an indebtedness within the meaning of the constitutional limitation on the indebtedness which may be contracted by municipal corporations.—Creston Waterworks Co. v. City of Creston, 70 N. W. 739, 101 Iowa, 687.

[f] (Mo. Sup. 1891) Under Const. Mo. art. 10, § 12, a county warrant issued in payment for county books bought by the county clerk, which he is required to provide by Rev. St. Mo. § 623, is void, if, at the time of its issuance, the revenue for that year is already consumed, as a debt of that sort is as much within the constitutional prohibition as a debt contracted for any other purpose by the county court.—Geo. D. Barnard & Co. v. Knox Co., 16 S. W. 917, 105 Mo. 382, overruling Potter v. Douglas Co. (1885) 87 Mo. 240.

[g] (Wash. Sup. 1897) A city can contract no general liability when it has reached the limit of its indebtedness.—German-American Sav. Bank v. City of Spokane, 49 Pac. 542, 17 Wash. 315.

[h] (Wash. Sup. 1897) It is competent for a county to issue warrants to pay obligations incurred in matters essential to governmental maintenance after the debt limit of $400,000 fixed by Const. art. 8, § 6, has been reached, and a warrant issued after reaching such debt limit is prima facie valid.—Duryee v. Friars, 50 Pac. 583, 18 Wash. 55.

[i] (Wash. Sup. 1897) A county has no authority to issue warrants in payment of obligations that it undertook to create, after the debt limit of $400,000 fixed by Const. art. 8, § 1, had been reached, for matters that were not essential to governmental maintenance, though the entire indebtedness, minus the indebtedness for matters essential to governmental maintenance, was less than the debt limit.—Duryee v. Friars, 50 Pac. 583, 18 Wash. 55.

4. Debts Payable out of a Special Fund.

[a] The acquisition of property by a municipality on the credit of a special fund not in existence, but to be subsequently created, does not create a debt against the city, within the constitutional limitation.
—(Ill. Sup. 1897) Commissioners v. Jackson, 45 N. E. 1000, 165 Ill. 17, affirming (1895) 61 Ill. App. 381;
(Ind. Sup. 1897) Board v. Reeves, 46 N. E. 995, 143 Ind. 467;
(Pa. Sup. 1896) Reuting v. City of Titusville, 34 Atl. 916, 175 Pa. St. 512;
(R. I. Sup. 1897) McAleer v. Angell, 36 Atl. 588, 19 R. I. 688;
(Wash. Sup. 1895) Winston v. City of Spokane, 41 Pac. 888, 12 Wash. 524; (1898) Faulkner v. City of Seattle, 53 Pac. 365, 19 Wash. 320.

[b] Though the limit of a municipal indebtedness has been reached, a contract for street improvements, providing for payment out of a fund to be raised by assessment of the locality improved, is valid.
—(Ind. Sup. 1897) Board v. Harrell, 46 N. E. 124, 147 Ind. 500;
(Iowa Sup. 1887) Davis v. City of Des Moines, 32 N. W. 470, 71 Iowa, 500; (1896) City of Clinton v. Walliker, 68 N. W. 431, 98 Iowa, 655;
(Minn. Sup. 1895) Kelly v. City of Minneapolis, 65 N. W. 115, 63 Minn. 125;
(Mo. Sup. 1896) City of Kansas City v. Ward, 35 S. W. 600, 134 Mo. 172;
(Or. Sup. 1894) Little v. City of Portland, 37 Pac. 911, 26 Or. 235.

Digitized by Google

[c] Where the city was bound absolutely for the payment of the bonds, though it might be reimbursed from the payment of the improvement assessments, they constitute a municipal indebtedness.

—(Wash. Sup. 1891) Austin v. City of Seattle, 27 Pac. 557, 2 Wash. St. 667;

(Wis. Sup. 1893) Fowler v. City of Superior, 54 N. W. 800, 85 Wis. 411.

[d] (Ind. Sup. 1890) Where cities advance the money needed to pay for street improvements as the work progresses, but when it is completed the entire cost is assessed against and made a lien on the abutting property, and the assessments, when collected, constitute a special fund to pay the bonds, each of which bears the name of the street improved, *held* that, as the bonds are payable out of a special fund, they create no debt against the city, within the meaning of Const. Ind. art. 13, limiting the indebtedness of municipal corporations.—Quill v. City of Indianapolis, 23 N. E. 788, 124 Ind. 292.

[e] (Iowa Sup. 1898) After a city's indebtedness has reached the limit fixed by Const. art. 11, § 3, it cannot make a contract binding it unconditionally to pay for paving a street, though it contemplates a reimbursement for such payments from the proceeds of the sale of bonds which do not increase the indebtedness within said section, being payable from special taxes for the paving.—Allen v. City of Davenport, 77 N. W. 532, 107 Iowa, 90.

5. Future Indebtedness—Water Supply, Lighting, and Other Necessary Expenses.

[a] A municipal corporation may lawfully contract for a supply of water or gas, or a like necessary, and may stipulate for the payment of an annual rental for the water or gas furnished each year, notwithstanding the aggregate of its rentals during the life of the contract may exceed the amount of the indebtedness limited by its charter. Such a contract does not create a debt, except conditionally, and upon the furnishing of the consideration from year to year.

—(U. S. Sup. 1898) City of Walla Walla v. Walla Walla Water Co., 19 Sup. Ct. 77, 172 U. S. 1, affirming (C. C. 1894) 60 Fed. 957;

(Ind. Sup. 1891) Crowder v. Town of Sullivan, 28 N. E. 94, 128 Ind. 486;

(Mass. Sup. 1887) Smith v. Town of Dedham, 10 N. E. 782, 144 Mass. 177;

(Mo. Sup. 1895) Saleno v. City of Neosho, 30 S. W. 190, 127 Mo. 627;

(1895) Lamar Water & Electric Light Co. v. City of Lamar, 31 S. W. 756, 128 Mo. 188;

(Mont. Sup. 1887) Davenport v. Kleinschmidt, 13 Pac. 249, 6 Mont. 502;

(N. M. Sup. 1897) Raton Waterworks Co. v. Town of Raton, 49 Pac. 898;

(Okl. Sup. 1894) Territory v. City of Oklahoma, 37 Pac. 1094, 2 Okl. 158;

(Pa. Sup. 1895) Wade v. Borough of Oakmont, 30 Atl. 959, 165 Pa. St. 479.

[b] Where a city contracts to pay a certain sum per year for a given number of years for water and electric light, it "incurs an indebtedness," within the meaning of the constitution, for the total amount which the contract provides shall be paid during all the years it is to continue.

—(Ga. Sup. 1899) City Council of Dawson v. Dawson Waterworks Co., 32 S. E. 907;

(Ky. App. 1894) Beard v. City of Hopkinsville, 24 S. W. 872, 95 Ky. 239;

(Mont. Sup. 1887) Davenport v. Kleinschmidt, 13 Pac. 249, 6 Mont. 502;

(N. J. Sup. 1887) Read v. Atlantic City, 9 Atl. 759, 49 N. J. Law, 538;

(Pa. Sup. 1896) Brown v. City of Corry, 34 Atl. 854, 175 Pa. St. 528;

(Wis. Sup. 1896) Earles v. Wells, 68 N. W. 964, 94 Wis. 285.

[c] Under Const. art. 11, § 18, forbidding a municipal corporation to incur indebtedness exceeding in any year the revenue provided for it for such year, a contract extending over several years is not invalidated by the fact that the aggregate amount to be paid during the whole period exceeds the

Digitized by Google

revenue provided for a single year, if a sufficient revenue for the purpose may be provided in each year without exceeding the limit.

—(Cal. Sup. 1896) McBean v. City of Fresno, 44 Pac. 358, 112 Cal. 159; Higgins v. City of San Diego, 45 Pac. 824; Smilie v. Fresno Co., 44 Pac. 556, 112 Cal. 311;

(Mo. Sup. 1897) Lamar Water & Electric Light Co. v. City of Lamar, 39 S. W. 768;

(Wis. Sup. 1897) Stedman v. City of Berlin, 73 N. W. 57, 97 Wis. 505.

[d] (U. S. C. C. A. 9th Circuit, 1896) An ordinance binding a city to pay monthly rentals creates conditions upon which indebtedness will arise when the rentals fall due; and, if at that time the constitutional limit of indebtedness has been reached, no debt will arise.—Keihl v. City of South Bend, 22 C. C. A. 618, 76 Fed. 921, 36 L. R. A. 228.

[e] (U. S. C. C. Or. 1868) An ordinance assuming a liability of $350,000, to be paid in semiannual installments in the course of 20 years, is in violation of a charter prohibiting the city from contracting an indebtedness exceeding $50,000.—Coulson v. Portland, Fed. Cas. No. 3,275 [Deady, 481].

[f] (Ill. Sup. 1889) Under Const. Ill. art. 9, § 12, which provides that "no municipal corporation shall become indebted in any manner" beyond a specified limit, a contract by a city whose indebtedness exceeds such limit to pay, in monthly installments, for water to be furnished for fire purposes, is void.—Prince v. City of Quincy, 21 N. E. 768, 128 Ill. 443.

[g] (Ill. Sup. 1898) Const. 1870, art. 9, § 12, prohibiting a city from becoming indebted, in any manner or for any purpose, to an amount exceeding 5 per cent. of the taxable value of its property, precludes it from contracting for the removal of garbage, and for the making of monthly payments as the work progresses, after the indebtedness has reached such limit.—City of Chicago v. McDonald, 52 N. E. 982, 176 Ill. 404.

[h] (Ill. App. 1889) Where the price of fire hydrants which a city agrees to purchase from a waterworks company is to be paid in annual installments during a period of 21 years, the fact that the entire purchase price exceeds the city's limit of indebtedness does not render the contract void. —Carlyle Water, Light & Power Co. v. City of Carlyle, 31 Ill. App. 325.

[i] (Ill. App. 1896) The acceptance of a proposition by a city, while indebted in excess of the constitutional limit, by which it will be able to acquire an electric light plant for the purpose of lighting its streets, and pay for the same out of its annual levy for lighting purposes, without increasing its indebtedness, is legal.—Hay v. City of Springfield, 64 Ill. App. 671.

[j] (Iowa Sup. 1869) An obligation arising under a contract to pay for work when, and as it shall be, performed in the future, does not constitute an indebtedness until the performance of the work.—Dively v. City of Cedar Falls, 27 Iowa, 227.

[k] (Iowa Sup. 1873) Where a contract made by a municipal corporation pertains to its ordinary expenses, and is, together with other like expenses, within the limits of its current revenues and such taxes as it may legally, and in good faith intends to, levy therefor, such contract does not constitute "the incurring of indebtedness," within the meaning of the constitution. Applied to contract for the supply of water to the city for a term of years.—Grant v. City of Davenport, 36 Iowa, 396.

[l] (Mich. Sup. 1899) A charter provision that, for the purpose of paying all liabilities of the city, the council "may raise annually, by tax, * * * such sum as they may deem necessary, not exceeding one per cent. of the valuation," etc., does not prohibit the incurring of such a liability as will accrue annually from performance of the contract creating it, merely because the aggregate of the accruals will exceed the 1 per cent. limit.—Ludington Water-Supply Co. v. City of Ludington, 78 N. W. 558.

[m] (Mo. Sup. 1892) Const. art. 10, § 11, provides, inter alia, that in cities and towns having less than 10,000 and more than 1,000 inhabitants the annual rate of taxation shall not exceed 50 cents on $100, but that in counties, cities, and school districts the specified rates may be increased by a two-thirds vote for the purpose of erecting public buildings. Section 12 provides that "no county, city, or town * * * shall be allowed to become in-

Digitized by Google

debted in any manner or for any purpose to an amount exceeding in any year the income and revenue provided for such year, without the assent of two thirds of the voters," etc. *Held*, that a town of less than 10,000 and more than 1,000 inhabitants could not by a two-thirds vote issue bonds and levy a tax exceeding 50 cents on $100, for the purpose of constructing waterworks and an electric light plant.—State v. Town of Columbia, 20 S. W. 90.

III. Computation of Indebtedness.

1. In General.

[a] In determining the "existing indebtedness" of a municipality, within Const. art. 11, § 3, prohibiting municipalities from incurring indebtedness over a certain per centum on their taxable property, including existing indebtedness, the amount of cash on hand and available assets and resources readily convertible into cash should be subtracted from its outstanding indebtedness.

—(Wash. Sup. 1898) Graham v. City of Spokane, 53 Pac. 714, 19 Wash. 447;

(Wis. Sup. 1898) Crogster v. Bayfield Co., 74 N. W. 635, 99 Wis. 1.

[b] (U. S. C. C. A. 8th Circuit, 1898) In determining the indebtedness of a county of Colorado with reference to the limitation placed on such indebtedness by the state constitution, debts created prior to August 1, 1876, when the state was admitted into the Union, and the constitution became effective, are not to be considered.—Rollins v. Board, 33 C. C. A. 181, 90 Fed. 575.

[c] (U. S. C. C. Iowa, 1864) Interest coupons attached to bonds do not form part of the principal debt, so as to invalidate the bonds, as issued in violation of a constitutional provision prohibiting an indebtedness exceeding 5 per cent. of the valuation of taxable property.—Durant v. Iowa Co., Fed. Cas. No. 4,189 [1 Woolw. 69].

[d] (U. S. C. C. Iowa) Bonds of a municipal corporation which are void because in excess of the constitutional limit of indebtedness are not to be counted in estimating the indebtedness of the corporation with reference to the validity of another issue of bonds.—(1897) Ashuelot Nat. Bank v. Lyon Co., Iowa, 81 Fed. 127; (1898) Keene Five-Cent Sav. Bank v. Lyon Co., 90 Fed. 523.

[e] (U. S. C. C. Iowa, 1898) In computing the existing indebtedness of a county on the date of the issue of bonds, unliquidated claims, which had not been filed or presented to the county board for allowance, without which, under the statute, they would not constitute legal demands which would support an action against the county, are not to be considered.—Keene Five-Cent Sav. Bank v. Lyon Co., Iowa, 90 Fed. 523.

[f] (Ill. Sup. 1898) Revenue warrants which are issued on taxes in course of collection, and which are taken by the party receiving them in exchange for a debt, should not be included in the indebtedness.—City of Chicago v. McDonald, 52 N. E. 982, 176 Ill. 404.

[g] (Ill. Sup. 1898) Bonds issued by a city for the construction of a waterworks system in an amount less than the value of the system, being similar to other bonds, except that they are designated as "Water-Loan Bonds," should be included in the indebtedness.—City of Chicago v. McDonald, 52 N. E. 982, 176 Ill. 404.

[h] (Ill. Sup. 1898) Judgments in tort against the city should be included as a part of the indebtedness.—City of Chicago v. McDonald, 52 N. E. 982, 176 Ill. 404.

[i] (Ill. Sup. 1898) In determining a city's indebtedness, within Const. 1870, art. 9, § 12, prohibiting an indebtedness, in any manner or for any purpose, in excess of 5 per cent. of the taxable value of its property, the cash in the city treasury and uncollected taxes should not be deducted.—City of Chicago v. McDonald, 52 N. E. 982, 176 Ill. 404.

[j] (Ill. Sup. 1898) Revenue warrants which are issued on taxes in course of collection, and which are taken by the party receiving them in exchange for a debt, should not be included in the indebtedness.—City of Chicago v. McDonald, 52 N. E. 982, 176 Ill. 404.

Digitized by Google

[k] (Ill. App. 1896) Where a water company, in consideration of the grant of a franchise, assumed and agreed to pay a debt of the city on bonds given a former water company, it did not extinguish the debt as a liability against the city, so as to reduce the total amount of its indebtedness.—Gold v. City of Peoria, 65 Ill. App. 602.

[l] (Minn. Sup. 1895) The amount of bonds and money in the sinking fund of Minneapolis is to be deducted from the total amount of outstanding bonds of the city, in determining whether the city's indebtedness exceeds the limit prescribed by Laws 1893, c. 204, § 2.—Kelly v. City of Minneapolis, 65 N. W. 115, 63 Minn. 125.

[m] (N. Y. Sup. 1892) Under Const. Amend. 1885, art. 8, § 11, the water debt of the city of Brooklyn is to be counted in determining whether the limit of indebtedness of that city has been reached, notwithstanding the further provision of such section that it shall not be construed "to prevent the issue of bonds to provide for the supply of water," because, though the city might for water supply incur debt in excess of the limit, it could not contract a debt in excess of the limit for any other purpose.—Adams v. Institution, 20 N. Y. Supp. 12, 64 Hun, 635, 65 Hun, 145.

[n] (Pa. Sup. 1894) Where a city purchases for its sinking fund a portion of the city loans, and they are no longer, as affects the city, a liability, the certificates so purchased, though not canceled, are no part of the city debt. —Brooke v. City of Philadelphia, 29 Atl. 387, 162 Pa. St. 123, 34 W. N. C. 341.

[o] (Wash. Sup. 1891) Condemnation awards, made under Laws Wash. T. 1885–86, p. 243, giving the city of Seattle power to widen streets, and condemn such real estate as may be necessary, and levy assessments upon such as may be benefited, are not a part of the general indebtedness of the city, even though it has failed to collect the assessments.—Baker v. City of Seattle, 27 Pac. 462, 2 Wash. St. 576.

[p] (Wash. Sup. 1891) The indebtedness for water and sewage purposes is no part of the general indebtedness of a city, and need not be considered in determining whether the city has already reached its 5 per cent. limit of general indebtedness.—Austin v. City of Seattle, 27 Pac. 557, 2 Wash. St. 667.

[q] (Wash. Sup. 1896) The cash assets of the county should be deducted from the outstanding indebtedness for the purpose of determining the amount of such indebtedness, within the meaning of the constitutional provision limiting the indebtedness to be incurred by counties.—State v. Hopkins, 44 Pac. 134, 14 Wash. 59.

[r] (W. Va. Sup. 1897) A subscription by a magisterial district to an internal improvement, being a county debt, is to be regarded in determining the limits of the county indebtedness fixed by Const. art. 10, § 8.—Neale v. County Court, 27 S. E. 370, 43 W. Va. 90.

[s] (Wis. Sup. 1897) The indebtedness of a city includes all city debts, except warrants for money actually in the treasury, and contracts for ordinary expenses within the current revenue.—State v. Common Council of City of Tomahawk, 71 N. W. 86, 96 Wis. 73.

[t] (Wis. Sup. 1897) A stipulation in a contract, giving a city an option to purchase the waterworks, is not an obligation binding on the city, so as to exceed its constitutional limit to contract city indebtedness.—Stedman v. City of Berlin, 73 N. W. 57, 97 Wis. 505.

[u] (Wis. Sup. 1897) Laws 1889, c. 488, § 13, and Laws 1891, c. 179, § 8, empower cities to purchase lands on credit for public parks. *Held*, that the amount due the vendors on such contracts is not an "indebtedness" of the city, within Const. art. 11, § 3, limiting indebtedness of municipal corporations.—Burnham v. City of Milwaukee, 73 N. W. 1018, 98 Wis. 128.

[v] (Wis. Sup. 1898) On the question of amount of indebtedness of a city, a debt paid with money diverted from a fund raised for another and express purpose must be considered as still existing.—Rice v. City of Milwaukee, 76 N. W. 341, 100 Wis. 516.

2. Municipalities Embracing the Same Territory.

[a] (Iowa Sup. 1893) Acts 24th Gen. Assem. c. 1, which creates a board of park commissioners in certain cities of the first class, and which vests

Digitized by Google

the board with full control over the parks, does not create a new municipality, distinct from the city, of which the board is the governing power, but the board is an instrumentality in aid of the city government, so that the bonds of the park board are a debt of the city.—Orvis v. Board, 56 N. W. 294, 88 Iowa, 674.

[b] (Neb. Sup. 1897) Under Const. art. 9, § 5, taxes for township purposes, where a county is under township organization, are not to be estimated in determining whether a county has exceeded that limit.—Railroad Co. v. Klein, 71 N. W. 1069, 52 Neb. 258.

[c] (N. Y. App. 1892) Under Const. Amend. 1884, art. 8, § 11, the county may incur debt to the extent of 10 per cent. of the value of all the land in the county, notwithstanding 96 per cent. of the real estate of the county is in the city, and notwithstanding the debts of the city.—Adams v. Institution, 32 N. E. 622, 136 N. Y. 52.

[d] (N. Y. Sup. 1892) Under Const. Amend. 1885, art. 8, § 11, providing that "no county * * * or any such city shall be allowed to become indebted * * * to an amount which * * * shall exceed ten per centum of the assessed valuation of the real estate of such county or city subject to taxation," the city and county may each incur debt to the extent of 10 per cent. of such value, though the lands in the city are charged with the debts of both city and county.—Adams v. Institution, 20 N. Y. Supp. 12, 64 Hun, 635, 65 Hun, 145.

[e] (S. C. Sup. 1897) The bonded debt of a county is not a part of the bonded debt of a city situated in such county, within the meaning of the charter limitation.—Todd v. City of Laurens, 26 S. E. 682, 48 S. C. 395.

[f] (S. C. Sup. 1897) Under Const. 1895, art. 8, § 7, restricting the indebtedness of municipal corporations to 8 per cent. of the assessed value of taxable property therein, and article 10, § 5, providing that whenever several municipal corporations cover the same territory, or portions thereof, each shall so exercise its power to increase its debt to the limit of 8 per cent. that the aggregate debt on any territory shall not exceed 15 per cent. of the value of the taxable property therein, a city may incur an indebtedness to an amount which, together with the debt of a school district co-extensive with the city, and its proportion of the county debt computed on its proportion of the taxable property, shall not exceed 15 per cent. of the value of taxable property therein, provided such city indebtedness does not exceed 8 per cent. thereof.—Todd v. City of Laurens, 26 S. E. 682, 48 S. C. 395.

[g] (S. C. Sup. 1897) The bonded debt of a duly-organized school district, co-extensive with a city, is not a debt contracted by the city, within the meaning of the charter limiting the indebtedness of the city to a specified amount.—Todd v. City of Laurens, 26 S. E. 682, 48 S. C. 395.

[h] (Wis. Sup. 1897) State and county taxes levied on property within the city are no part of the city's indebtedness.—State v. Common Council of City of Tomahawk, 71 N. W. 86, 96 Wis. 73.

[i] (Wis. Sup. 1897) A city is not liable for any part of a state loan to the school board of a town in the same county, so as to make such loan a part of its indebtedness, within Const. art. 11, § 3, merely because installments thereof were for several years certified to the city by the county clerk as part of its state taxes, and paid by it; there being no apportionment of such debt between the city and the town, and no statute authorizing such an apportionment.—State v. Common Council of City of Tomahawk, 71 N. W. 86, 96 Wis. 73.

3. Annexation of Municipality.

[a] (Ill. Sup. 1889) Const. Ill. art. 9, § 12, which limits the extent of municipal indebtedness, does not render invalid the annexation of one municipality to another, pursuant to Rev. St. Ill. 1889, c. 24, § 211, though the indebtedness of one or both of them exceeds the constitutional limit.—True v. Davis, 22 N. E. 410, 133 Ill. 522.

Digitized by Google

IV. Valuation and Revenue.

[a] The word "valuation," as used in Const. Pa. art. 9, § 8, limiting the debt of cities to 7 per cent. of the assessed valuation of taxable property, means the valuation by city authorities for city taxation, and not that made by county officers for county purposes.

—(U. S. C. C. Pa. 1895) Dupont v. City of Pittsburgh, 69 Fed. 13;
(Pa. Sup. 1895) Bruce v. City of Pittsburgh, 30 Atl. 831, 166 Pa. St. 152.

[b] Under a constitutional provision declaring that no city shall incur an indebtedness exceeding 5 per cent. of the value of its taxable property, "to be ascertained by the assessment next before the last assessment for state and county purposes, previous to the incurring of such indebtedness," an assessment cannot be considered which has not passed the state board of equalization.

—(U. S. C. C. Mo. 1895) Prickett v. City of Marceline, 65 Fed. 469;
(Ill. Sup. 1888) People v. Hamill, 29 N. E. 280, 134 Ill. 666.

[c] (U. S. C. C. A. 4th Circuit, 1895) A statute providing that a large part of the taxes paid by a certain class of persons shall be refunded to them does not exempt the property of such persons from taxation, so as to reduce the amount of taxable property on which a limit of indebtedness is to be computed.—Town of Darlington v. Atlantic Trust Co., 16 C. C. A. 28, 68 Fed. 849.

[d] (U. S. C. C. Iowa, 1898) An exemption in the nature of a bounty does not affect the "value of the taxable property" in a county, within the constitutional provision, which, for the purpose of fixing the limit of the county's indebtedness, is the total valuation placed upon such property, without deducting the amount of the exemption.—Keene Five-Cent Sav. Bank v. Lyon Co., 90 Fed. 523.

[e] (Ill. Sup. 1888) Under Const. Ill. art. 9, § 12, forbidding cities from becoming indebted to an amount exceeding 5 per cent. on the value of the taxable property therein, to be ascertained by the last assessment for state and county taxes previous to the incurring of the indebtedness, the constitutionality of a debt incurred August 15, 1887, by a city, the assessment of whose taxable property for the year 1887 was not fixed by the state board of equalization until October 1, 1887, must be determined by reference to the assessment of 1886.—Culbertson v. City of Fulton, 18 N. E. 781.

[f] (Iowa Sup. 1876) Uncollected taxes may be considered as available assets up to the time of the annual tax sale; but after that the city has the burden to show that they have any value.—French v. City of Burlington, 42 Iowa, 614.

[g] (Mo. Sup. 1894) The words, "income and revenue provided for such year," in Const. art. 10, § 12, subd. 1, providing that no county, city, or town shall become indebted in any one year for a greater amount without the assent of two-thirds of the voters, means income derived from any source, and not that derived from taxation alone.—Lamar Water & Electric Light Co. v. City of Lamar, 26 S. W. 1025.

[h] (Mo. Sup. 1897) Money derived by a city from sale of bonds is no part of its income and revenue, as respects power to contract debts in any year in excess thereof.—Webb City & C. Waterworks Co. v. City of Carterville, 43 S. W. 625, 142 Mo. 101.

[i] (S. C. Sup.) Const. art. 9, § 17, providing that no bonded debt incurred by a county or municipality shall exceed 8 per cent. of the assessed value of the taxable property therein, appoints as standard the last tax assessment before the bond issue, and no subsequent assessment is material.—(1893) State v. Cornwell, 18 S. E. 184, 40 S. C. 26; (1897) Germania Sav. Bank v. Town of Darlington, 27 S. E. 846, 50 S. C. 337.

[j] (S. C. Sup. 1897) In determining whether the bonded debt of a city exceeds the per cent. of the assessed valuation allowed by law, the computation must be based on the assessment for state and county purposes only. —Todd v. City of Laurens, 26 S. E. 682, 48 S. C. 395.

[k] (S. C. Sup. 1897) Gen. St. 1882, § 169, subd. 23, providing that manufacturers shall receive from county and city treasurers certain portions of the taxes that they have paid on their invested capital, does not exempt

Digitized by Google

manufacturers from taxation; and hence, in determining the amount of a municipal assessment, manufacturers' invested capital should not be deducted.—Germania Sav. Bank v. Town of Darlington, 27 S. E. 846, 50 S. C. 337.

[l] (Tex. Civ. App. 1897) In determining the amount of bonds a city may legally issue upon a given valuation of property in the city, personal property is included with real-estate values.—Nalle v. City of Austin, 42 S. W. 780.

[m] (Wash. Sup. 1892) Where a liability is incurred by a city when its total indebtedness, including such liability, is within the constitutional limit, the fact that a subsequent valuation of the city's property for taxation reduces the former valuation so as to increase the city's debt beyond the limit will not invalidate warrants thereafter issued to evidence such liability.—Childs v. City of Anacortes, 32 Pac. 217, 5 Wash. 452.

[n] (Wash. Sup. 1892) The fact that after the valuation of property for taxation by county officers a portion thereof is segregated from the balance of the county by the incorporation of a city does not prevent the valuation of the property so segregated from being the basis on which to estimate the limit of the city's indebtedness until the regular city assessment for the succeeding year is completed and becomes effective.—Childs v. City of Anacortes, 32 Pac. 217, 5 Wash. 452.

[o] (Wis. Sup. 1897) The "last assessment for city and county taxes previous to the incurring of the indebtedness," by which the value of the property within the municipality is to be ascertained in determining whether its indebtedness exceeds the constitutional limit (Const. art. 11, § 3), is the last assessment in the municipality, as equalized by its board of review.—State v. Common Council of City of Tomahawk, 71 N. W. 86, 96 Wis. 73.

[p] (Wis. Sup. 1898) Moneys to be derived by a city during the year from licenses cannot be considered on the question of whether it has exceeded its debt limit, being entirely uncertain in amount, and not dependent on any act of the city.—Rice v. City of Milwaukee, 76 N. W. 341, 100 Wis. 516.

V. Anticipation of Revenue.

[a] (Cal. Sup. 1897) Under Const. art. 11, § 18, providing that a city shall not incur any indebtedness in any year in excess of the revenue for that year, unless assented to by two-thirds of the qualified electors, materials purchased by a city during one year cannot be paid for out of the revenues of any future year.—W. W. Montague & Co. v. English, 51 Pac. 327, 119 Cal. 225.

[b] (Cal. Sup. 1897) Though the fund on which one relies for payment is exhausted after he furnishes materials to a city, and before he presents his bill, he must nevertheless, under Const. art. 11, § 18, declaring that each year's revenue shall pay each year's indebtedness, look for satisfaction of his claim in that year's income in which the obligation was contracted.—W. W. Montague & Co. v. English, 51 Pac. 327, 119 Cal. 325.

[c] (Ind. Sup. 1896) That a city had sufficient funds to pay for a fire-alarm system at the time fixed for payment by the contract of sale does not validate the contract if, when it was made, and when the system was furnished, the city was indebted beyond the constitutional limit, and had no money in the treasury.—City of Laporte v. Gamewell Fire Alarm Tel. Co., 45 N. E. 588, 146 Ind. 406, 35 L. R. A. 686.

[d] (Iowa Sup. 1876) While the revenues which are absolutely certain to be received by the collection of taxes may, to some extent at least, be anticipated, the rule should not be so far relaxed as to impair the force of the constitutional provision, or nullify its spirit.—French v. City of Burlington, 42 Iowa, 614.

[e] (N. D. Sup. 1898) Warrants issued for the current expenses of the county, after the limit of indebtedness fixed by Const. § 183, has been reached, but in anticipation of the collection of a tax already levied, if not in excess of the tax levied, are not invalid as augmenting the existing indebtedness of the county, within the meaning of section 187.—Darling v. Taylor, 75 N. W. 766, 7 N. D. 538.

Digitized by Google

[f] (Or. Sup. 1898) Unappropriated current revenues of a county, including those past due and uncollected, cannot be anticipated by voluntary indebtedness in excess of the constitutional debt limit, especially where the county is largely indebted for current expenses.—Municipal Sec. Co. v. Baker Co., 54 Pac. 174.

[g] (S. D. Sup. 1896) Warrants issued by a city for current expenses, after the constitutional limit of indebtedness has been reached, but in anticipation of a tax already levied, are valid to the extent of the taxes levied.—Shannon v. City of Huron, 69 N. W. 598, 9 S. D. 356.

[h] (W. Va. Sup. 1891) Under Const. art. 10, § 8, a city indebted up to the limit fixed by the constitution cannot carry on its operations upon credit in any manner or for any purpose, but must pay during the current year with funds in hand, or with funds already legally levied.—Spilman v. City of Parkersburg, 14 S. E. 279, 35 W. Va. 605.

VI. Validity of Bonds Issued in Excess of Constitutional Limitation.

[a] Where a municipal corporation issues bonds to evidence an indebtedness in excess of the constitutional limit, such bonds are valid to the extent of the authorized issue, and invalid beyond that extent.

—(Ill. Sup. 1888) Culbertson v. City of Fulton, 18 N. E. 781, 127 Ill. 30; (Ill. App. 1893) Griswold v. City of East St. Louis, 47 Ill. App. 480;

(Ind. Sup. 1898) School Town of Winamac v. Hess, 50 N. E. 81, 151 Ind. 229;

(Iowa Sup. 1876) McPherson v. Foster, 43 Iowa, 48.

[b] (U. S. C. C. A. 8th Circuit, 1896) Bonds issued by a school district in Iowa for an amount exceeding the limit of indebtedness prescribed by the constitution are void; and refunding bonds, also in excess of the constitutional limit, issued to take them up, are void in the hands of all persons, without regard to their recitals.—Shaw v. Independent School Dist., 23 C. C. A. 169, 77 Fed. 277.

[c] (U. S. C. C. A. 8th Circuit, 1898) Bonds issued by a county in violation of a constitutional limitation of indebtedness to a certain proportion of the value of its taxable property are void; and bonds subsequently issued, at a time when such issue did not bring the total indebtedness of the county, excluding the invalid bonds, up to the constitutional limit, are valid, although the county may afterwards voluntarily pay the invalid bonds.—Lyon Co. v. Ashuelot Nat. Bank, 30 C. C. A. 582, 87 Fed. 137, affirming (C. C. 1897) 81 Fed. 127.

[d] (U. S. C. C. Iowa, 1897) Where refunding bonds are issued, and the proceeds thereof are used, in part, at least, in paying off valid county debts, the transaction does not increase the total indebtedness, so as to render the whole transaction void, and the original purchasers of the bonds may maintain a suit in equity to recover the money paid.—Ætna Life Ins. Co. v. Lyon Co., 82 Fed. 929.

[e] (Iowa Sup. 1897) The fact that bonds issued by a school district in payment of a valid judgment against it draw semiannual interest at 10 per cent. per annum, and that the aggregate amount thus agreed to be paid in excess of the judgment creates an indebtedness beyond the constitutional limit, will not prevent recovery of the amount of the bonds, with semiannual interest at 6 per cent. per annum.—Thompson v. Independent School Dists., 70 N. W. 1093, 102 Iowa, 94.

[f] (N. Y. Sup. 1897) The fact that municipal bonds previously issued are now in excess of the limit of city indebtedness does not render them void, the test being whether they were valid when sold by the city.—Gibson v. Knapp, 47 N. Y. Supp. 446, 21 Misc. Rep. 499.

[g] (Okl. Sup. 1897) Under a judgment of court rendered by consent of the city authorities, warrants were issued by the city under Laws 1890, c. 14, in settlement of debts and liabilities of provisional governments, the city at that time being indebted beyond the limit of 4 per cent. of the value of taxable property within the city, fixed by Act Cong. July 30, 1886. *Held*, that such warrants were void, and their collection could not be enforced by mandamus.—Martin v. Territory, 48 Pac. 106, 5 Okl. 188; Spencer v. Gray, 48 Pac. 110, 5 Okl. 216.

Digitized by Google

[h] (Tex. Civ. App. 1897) Bonds, invalid because in excess of the amount which the constitution at the time of their issuance empowered the legislature to authorize, cannot be validated by curative legislation.—Mitchell Co. v. City Nat. Bank, 39 S. W. 628.

[i] (Wis. Sup. 1898) Bonds issued by a county in aid of the construction of a railroad in excess of the limit of its indebtedness, where the contract between the county and the railway company is entire, cannot be scaled down to an amount which the county might legally have contracted to pay.—Crogster v. Bayfield Co., 74 N. W. 635, 99 Wis. 1.

VII. ESTOPPEL.

[a] (U. S. Sup. 1889) By Const. Colo. art. 11, § 6, the amount of indebtedness which a county can incur depends on the amount of the assessed valuation of the county. Act Feb. 21, 1881, authorized the issue of bonds and required only that they "shall not exceed the sum of the county indebtedness" at the date of notice of election held to decide the question of such issue, such sum to be ascertained by the county commissioners. There was a recital in the bonds, each of which showed the total amount of issue, that they were "under, and by virtue of, and in full compliance with," the statute, and that "all the provisions and requirements of said act have been fully complied with by the proper officers," etc., but they contained no reference to the constitutional provision. *Held*, that the county was not estopped to make the defense that the indebtedness for which the bonds were issued was incurred after the constitutional limit had been reached.—Lake Co. v. Graham, 9 Sup. Ct. 654, 130 U. S. 674.

[b] (U. S. Sup. 1893) Const. Colo. art. 11, § 6, forbids a county, under any circumstances, to issue bonds beyond a certain amount, and limits the right to issue bonds, without a previous vote of the qualified electors of the county, to half such amount. *Held*, that a purchaser of the bonds for value, and before maturity, was charged with the duty of examining the county record of indebtedness in order to ascertain whether the bonds were lawfully issued.—Sutliff v. Board, 13 Sup. Ct. 318, 147 U. S. 230.

[c] (U. S. C. C. A. 8th Circuit, 1898) Under the constitution and statutes of Kansas, which vest the board of commissioners of a county with the power to settle and allow claims against it, a recital in bonds issued by a county that they were issued by the county board in accordance with the provisions of a statute authorizing counties to refund their indebtedness is a representation that the debt refunded was just and valid; and, as against an innocent purchaser of such bonds in reliance upon this representation, the county is estopped from denying it for the purpose of defeating their collection.—Board of Com'rs of Seward Co. v. Ætna Life Ins. Co., 32 C. C. A. 585, 90 Fed. 222.

[d] (U. S. C. C. A. 8th Circuit, 1898) A county which issued bonds containing a recital that they were issued in accordance with the provisions of a statute authorizing counties to refund their indebtedness cannot defeat recovery thereon, by a purchaser in open market in reliance on such recitals, by proof that there was included therein a sum in excess of the actual prior indebtedness of the county, which was prohibited by the statute.—Board of Com'rs of Meade Co. v. Ætna Life Ins. Co., 32 C. C. A. 600, 90 Fed. 237.

[e] (Iowa Sup. 1876) The person who becomes a creditor of a municipal corporation must, at his peril, take notice that its indebtedness is not in excess of the constitutional limitation.—French v. City of Burlington, 42 Iowa, 614.

[f] (Or. Sup. 1898) A county, by receiving benefits, is not estopped to assert the invalidity of warrants issued in excess of the constitutional limit of indebtedness.—Municipal Sec. Co. v. Baker Co., 54 Pac. 174.

[g] (Or. Sup. 1898) The fact of payment of claims allowed beyond the constitutional limit of a county's indebtedness will not estop taxpayers or the county from asserting the invalidity of other claims of the same nature outstanding, since county officials have no power of ratification as to such liabilities.—Municipal Sec. Co. v. Baker Co., 54 Pac. 174.

[h] (Utah Sup. 1897) A county is not estopped to deny that any county warrant is beyond the debt limit fixed by Const. art. 14, § 3, though the claim for which it was issued was properly audited, and the warrant duly issued and certified to be within the debt limit.—Fritsch v. Board, 47 Pac. 1026, 15 Utah, 83.

Digitized by Google

VIII. Levy and Assessment.

[a] (Cal. Sup. 1895) Under Const. art. 11, § 18, providing that a city shall not incur liabilities in any year in excess of the revenue for that year without the consent of two-thirds of the qualified electors, a levy and assessment for liabilities so incurred is void.—Smith v. Broderick, 40 Pac. 1033, 107 Cal. 644.

[b] (Ill. Sup. 1878) Where the indebtedness of a city exceeds the constitutional limit, it will be enjoined from the levy and collection of a tax for the purpose of paying an additional indebtedness in violation of the constitution. —Howell v. City of Peoria, 90 Ill. 104.

IX. Liability of City for Damages.

[a] Where a contract made by the board of education of a city has been carried out as far as it can be without creating an indebtedness which such board has been legally prohibited from creating, it is not liable for damages for failure or refusal, or its inability, to further carry out such contract, so long as its want of authority to create such additional indebtedness continues.

—(Okl. Sup. 1897) Peck-Williamson Heating & Ventilating Co. v. Board of Education of City of Oklahoma City, 50 Pac. 236, 6 Okl. 279;

(Pa. Sup. 1888) Dhrew v. City of Altoona, 15 Atl. 636, 121 Pa. 401.

[b] (Wash. Sup. 1897) Where a city has no power to contract for improvements to be paid out of the general fund, it is not liable for failure to provide a special fund.—German-American Sav. Bank v. City of Spokane, 49 Pac. 542.

(93 Fed. 931.)

ST. PAUL FIRE & MARINE INS. CO. v. KNICKERBOCKER STEAM TOWAGE CO.

(Circuit Court of Appeals, First Circuit. April 26, 1899.)

No. 243.

1. Marine Insurance—Construction of Policy.

A marine policy permitted a tug to navigate the waters of Long Island Sound and shores and "all inland and Atlantic Coast waters of the United States, and all waters adjacent, connecting, or tributary to any of the above waters." The policy also provided that any deviation beyond the limits named should not avoid the policy, but that no liability should exist during such deviations, and "upon the return of said vessel within the limits named herein" the policy should be and remain in full force and effect. The tug went without the waters described to Mexico, thence with a tow she started for New York, and when off Charleston Bay, standing in for a supply of coal, was wrecked on a shoal about 1½ miles from the nearest mainland. *Held*, that the place of loss was in the "Atlantic Coast waters of the United States," and was covered by the policy.

2. Same—Conditions—Overinsurance.

A policy of marine insurance provided that it should be void if other insurance was made on the vessel exceeding $50,000. The policy also provided that, in the event of a deviation from certain waters, the policy should be suspended, and take effect on return to such waters. The tug, desiring to go outside of the waters designated, applied to defendant company for permission and indorsement on the policy, which was refused. Thereafter it took out a policy in another insurance company, which, with the policies then existing, would have exceeded the prescribed limits. The latter policy provided that, if the assured had other insurance prior in date, the company should be liable only for so much as the amount of the prior insurance was deficient towards covering the property insured. This prior insurance was to the total value of the vessel. *Held that*, as such latter policy could take effect only on the suspension of the other policies, and was at once suspended upon the revival of the

Digitized by Google

other policies on a return within the limits, there was at no time insurance in effect more than the agreed amount, and the policy sued on was not void for overinsurance.

In Error to the Circuit Court of the United States for the District of Maine.

Eugene P. Carver (Edward E. Blodgett, on the brief), for plaintiff in error.

Orville D. Baker, for defendant in error.

Before PUTNAM, ALDRICH, and BROWN, District Judges.

BROWN, District Judge. This suit is upon a marine policy on the tug B. W. Morse. The policy runs for the term of one year from May 1, 1893, to May 1, 1894, "unless sooner terminated or made void by conditions hereinafter expressed." The loss occurred on October 10, 1893, within the term of the policy. The tug was "privileged to use and navigate the port, bays, and harbor of New York, East and North or Hudson rivers, waters of New Jersey, Long Island Sound, and shores, and waters as far as New Bedford, and all inland and Atlantic Coast waters of the United States, and all waters adjacent, connecting, or tributary to any of the above waters, but not beyond said waters, and tow vessels to and from sea, and search for vessels at sea, according to the custom of the port of New York."

The questions in this case arise from the fact that the tug, during the term of the policy, went without the waters described, on a voyage from New York to Nassau, thence to Havana, thence to Progresso, Mexico, whence, with a schooner in tow, she started on October 4, 1893, bound for New York. On this voyage, the tug reached latitude 31.35 N., and longitude 79.40 W., on October 9th, and then stood in for Charleston bar and harbor for a supply of coal, and on the next day, October 10th, was wrecked on Pumpkin Hill shoal, about 1½ miles from the nearest mainland, and became a total loss. The circuit court found "as matter of fact, under the proper construction of the policy, that the place of loss was covered by the policy, and that it was in Atlantic Coast waters of the United States." The assured contends that the test of liability is purely geographical, and that if at the time of loss the vessel was actually within the geographical limits described in the policy the insurer is liable. The following provision is relied upon:

"Any deviation beyond the limits named in this policy shall not void this policy, but no liability shall exist during such deviation; and, upon the return of said vessel within the limits named herein, this policy shall be and remain in full force and effect."

In this opinion we will use the terms "plaintiff" and "defendant" to indicate the relation of the parties in the original suit.

The defendant contends that the tug had deviated from the waters covered by the policy, and had not returned thereto, within the terms of said policy, so as to be covered by it. It is urged that the putting in of the tug to Charleston was but an incident of her voyage from Progresso to New York, and that, as she had not completed the voyage on which she was engaged, she was lost on a voyage not

Digitized by Google

covered by the policy in suit. We have then to determine whether the parties to the present contract intended to cover losses occurring in defined geographical limits within the period of the policy, or whether they contracted with reference to voyages from place to place within these limits, excluding losses occurring within the specified time and place upon voyages to and from ports without the specified limits. So far as we can see, there is no prima facie balance of probability in favor of either contention. Voyage policies and time policies are equally recognized in law, and a time policy has no necessary reference to any specified voyage or voyages. In fact, the printed form used by the parties seems to have been designed for a time policy applicable to special waters without regard to voyages. As originally printed it read:

"Privileged to use and navigate the port, bays, and harbor of New York, East and North or Hudson rivers, waters of New Jersey, Long Island Sound, and shores,

.....

and all waters adjacent, connecting, or tributary to any of the above waters, but not beyond said waters, and tow vessels to and from sea, and search for vessels at sea, according to the custom of the port of New York."

The waters named are such that their limits both towards the land and towards the sea are reasonably ascertainable. While there may be some uncertainty as to the location and extent of "waters adjacent, connecting, or tributary," yet it is apparent that these words are for the benefit of the assured, and to avoid a too rigid application of the restriction to the limits previously named. Though it might in some cases be necessary to refer to the intended employment of the vessel, in order to determine whether she were within "waters adjacent, connecting, or tributary," the possible necessity for such an incidental inquiry does not disturb, but tends rather to confirm, the opinion that the original printed form covers the vessel in limits determined by geographical description rather than by reference to voyages. Were the case before us upon the printed form without written additions, and had the loss occurred in the waters named therein, we should have no doubt of the correctness of the plaintiff's contention. We have then to inquire as to the effect of the written addition of the words, "and waters as far as New Bedford, and all inland and Atlantic Coast waters of the United States." A difficulty arises from the words, "and all inland and Atlantic Coast waters of the United States." Defendant's counsel argues that these words are to be taken conjunctively, and mean merely such of the coast waters as are inland waters. We cannot so interpret the clause, since this is in effect to reject the words "Atlantic Coast" as surplusage. The difficulty is in applying as a designation of geographical limits words so indefinite as "Atlantic Coast waters of the United States." Were it necessary in this case to determine at what point on her voyage from Progresso the vessel entered these waters, or were it a question of defining the easterly boundary of these waters, serious doubts might arise under the terms of the contract. If a marine league were taken as the measure of the breadth of these waters, it might exclude the vessel on a voyage from port to port within the Atlantic Seaboard, even though she were

Digitized by Google

on the usual course between these ports. It might exclude the vessel when driven off the coast by stress of weather. Therefore there would be reason in holding these words to mean those waters usually employed by vessels in voyages in the coasting trade between ports on the Atlantic Coast, and that a vessel properly pursuing such a voyage must be assumed to be within the Atlantic Coast waters, though at times scores of miles from shore. The waters would then be marked out, not by any particular voyage of any particular vessel, but by the usual course of trade. Conceding, however, that this contract of insurance contains terms which would in some cases be difficult of application, a recognition of these difficulties does not lead to the adoption of the defendant's view that the policy must be considered as if it covered a series of voyages, since by adopting this construction we fall into new difficulties in adapting it to the contemplated business. Referring to the contract for provisions as to the employment of the tug, we find:

"Warranted by the assured to be employed exclusively in the towing and wrecking business, * * * to be used mainly for general towing purposes, * * * and tow vessels to and from sea, and search for vessels at sea, according to the custom of the port of New York."

In construing this policy according to the nature of the business, we must first bear in mind that this business requires neither a port of lading nor a port of discharge. It is apparent, we think, that the parties did not have in mind that the tug should be solely engaged in a series of voyages from port to port in the coastwise trade. The business of towing might call for a long succession of trips, which could not be deemed voyages in the ordinary sense. The wrecking business contemplated by the contract might involve her in risks differing greatly from those of ordinary coastwise voyages from port to port. Between these trips she may have no necessity to make port, save for supplies and repairs. We cannot construe the policy in such manner as to impose upon her idle entries into port that would be of no service and might lessen her earning power. The fact that the business differs so greatly from that of a carrying trade, where the parties contemplate a terminus a quo and a terminus ad quem, renders it highly probable that only geographical limits were intended. The language of the policy is apt to express such an intention. See Hennessey v. Insurance Co., 28 Hun, 98. In ordinary voyage policies, it is not contemplated that there shall be a departure from the defined course. Here, however, the parties not only contemplated departures from the described waters, but expressly provided for them by saying that they should not void the policy; providing, also, that the policy should be in full force upon "the return of said vessel within the limits named herein." As in cases of doubt construction should be favorable to the assured, the defendant has the burden of satisfying us that the words "return within the limits" are equivalent to the words "return to a place of good safety within the limits"; in other words, that the word "return" used in this policy of marine insurance has a technical meaning and connotes a place of good safety. We find no evidence or legal authority that would justify us in giving it such a meaning in this case. On the contrary, considering the fact that the

Digitized by Google

instrument is one drawn by an insurance company, we think that, had a return to a place of good safety been intended, the company would not have failed for lack of apt words or skill of expression to employ unequivocal and definite terms to express its intention. There is a wide difference between a return to certain waters and a return to places of good safety within those waters, and the assured is entitled to the full benefit of that difference. Should we hold that after a suspension the policy revives only upon a return to a place of good safety, at the end of a voyage begun without the limits, we should construe the contract not according to the tug's whole business, but according only to that part in which she engages in a full voyage from port to port. A proper construction must be one that provides for her entire business. If voyages are disregarded, and only geographical limits are provided for, the contract, so construed, is adequate to all the requirements of the business. The original printed form seems appropriate to meet these requirements, and we are of the opinion that the written additions do not indicate an intention in the present case to change the character of the contract set forth in the printed form. We can derive no aid from the cases of Mark v. Insurance Co., 13 C. C. A. 157, 64 Fed. 804, and Insurance Co. v. O'Connell, 29 C. C. A. 624, 86 Fed. 150, as they differ so materially from the case before us as to be inapplicable as precedents. Whatever may be the difficulty in interpreting the words "Atlantic Coast waters" in cases where the easterly boundary is in question, no such difficulty arises as to the western boundary. There is no need for reference to any voyage to determine whether a vessel was wrecked in Atlantic Coast waters, if she were wrecked on the Atlantic shores of the United States, or upon a shoal situated a mile and a half from the mainland, as was here the case. The popular meaning of the terms, as well as the meaning that has reference to the three-mile limit and that which has reference to the usages of the coasting trade, are all properly applicable to the place where this vessel was wrecked.

We agree, therefore, with the finding of the circuit court, "as matter of fact, under the proper construction of the policy, that the place of loss was covered by the policy, and that it was in Atlantic Coast waters of the United States." We are also of the opinion that the facts found by the court below raise no question of the seaworthiness of the vessel at the time the policy in suit reattached on her return from without the limits.

The defendant next contends that the policy in suit was avoided by other insurance, in violation of the following provision:

"It is also agreed that this policy shall become void if any other insurance is or shall be made upon the vessel interested, hereby insured, which, together with this insurance, shall exceed the sum of fifty thousand dollars."

It appears that during or before the time covered by the general voyage from New York out and return, and before the loss of the tug, the plaintiff applied to the defendant company for permission and requested an indorsement on this policy for the general voyage above described, which was refused; and that thereafter, on or about September 21, 1893, the plaintiff took out a policy in the Atlantic Mutual Insurance Company for $17,500. It is contended that thereby the

Digitized by Google

plaintiff exceeded the permitted insurance. It is agreed that at the date of the issue of the Atlantic policy there was $45,000 of insurance on the vessel, other than the $5,000 policy in suit. Each of the policies was based upon an agreed valuation of $50,000, and the policies in the aggregate reached that amount. So that prior to September 21, 1893, there was $50,000 insurance, exclusive of the Atlantic policy. The loss occurred during the term covered by all the policies. The Atlantic policy contained, however, the following:

"Provided always, and it is hereby further agreed, that if the said assured shall have made any other assurance upon the premises aforesaid, prior in day of date to this policy, then the said Atlantic Mutual Insurance Company shall be answerable only for so much as the amount of such prior assurance may be deficient towards fully covering the premises hereby assured."

As the prior assurance was to the total value of the vessel, and was in effect at the time and place of loss, it is evident, we think, that the express terms of the Atlantic policy excluded it from liability, since there was no deficiency. By its terms, the Atlantic policy, under the existing state of facts, could take effect only upon suspension of the other policies, and was at once suspended upon the revival of the other policies upon a return within the limits, so that at no time was there in effect more than the agreed sum of $50,000. The policy in suit, therefore, was not void for overinsurance, nor can the defendant reduce its liability by any claim for contribution by the Atlantic company. The fact that the defendant had refused permission to employ the tug outside the permitted waters we think immaterial. The rights of the parties were fixed by the contract contained in the policy in suit, and neither the refusal of the defendant company to enlarge its liability, nor the act of the plaintiff in insuring risks not covered by the former policy, can affect the construction of the contract in question, or restrict the legal obligations thereby incurred.

The judgment of the circuit court is affirmed, with interest, and the Knickerbocker Steam Towage Company, defendant in error, is awarded the costs of this court.

(93 Fed. 958.)

SIMONDS ROLLING-MACH. CO. v. HATHORN MFG. CO. et al.

HATHORN MFG. CO. et al. v. SIMONDS ROLLING-MACH. CO.

(Circuit Court of Appeals, First Circuit. April 25, 1899.)

Nos. 260 and 261.

1. PATENTS—ANTICIPATION—PRESUMPTIONS.

On a question of anticipation, if the identity of methods and results is doubtful, the doubt must be resolved in favor of the successful patentee, who, in a practical way, has materially advanced the art.

2. SAME.

A patent for a machine for making leaden bullets and shot by rolling or forging the piece of lead between cylindrical dies, the edges of which are sharpened to cut away surplus material, *held* not to have anticipated an invention for forging metal articles which are circular in cross sec-

Digitized by Google

tion, such as car axles, etc., which operates by forging the hot metal and spreading or crowding away the surplus material, and compacting the outer surface of the article forged.

3. SAME—DIES FOR FORGING METAL ARTICLES.
The Simonds patent, No. 319,754, for improvements in dies for forging articles circular in cross section, such as car axles, etc., *held* not anticipated by the Bundy English patent of May 1, 1806, for "machines or instruments for making leaden bullets and other shot," and also *held* valid and infringed as to claim 1.

4. SAME—ANTICIPATION.
The Simonds patent, No. 419,292, for a method of making rolled-metal forgings that are circular in cross-sectional area, *held* not anticipated by the Bundy English patent of May 1, 1806, and also *held* valid and infringed.

5. SAME—JOINT AND SEVERAL DEFENDANTS.
Where the suit is brought against a corporation and certain individual defendants, and infringement is found, the decree need not be limited to the joint infringement of all the defendants, but may also go against the individual defendants for their several individual infringements.

90 Fed. 201, modified.

Appeals from the Circuit Court of the United States for the District of Maine.

Frederick P. Fish and William K. Richardson, for Simonds Rolling-Mach. Co.

Benjamin Phillips (T. Hart Anderson, on the brief), for Hathorn Mfg. Co. and others.

Before COLT, Circuit Judge, and WEBB and ALDRICH, District Judges.

COLT, Circuit Judge. This suit was brought for infringement of two patents, No. 319,754, dated June 9, 1885, and No. 419,292, dated January 14, 1890. The first patent was issued to George F. Simonds for dies "for forging articles circular in cross section," such as car axles, and the second to the complainant, as assignee of Simonds, for the method of making irregular shaped metal articles, or "of making wrought-metal forgings that are circular in cross-sectional area." The court below held that the first claim of the die patent was limited to irregular shaped articles, and did not cover dies for making balls; that the second claim must be strictly construed, and therefore was not infringed; and that the method patent was valid, and infringed by the defendants. 90 Fed. 201. The complainant appeals from so much of the decree below as limits the scope of the first claim of the die patent, and holds that the defendants do not infringe the second claim. The defendants appeal from so much of the decree as declares that they infringe the first claim of the die patent and the method patent.

It is apparent that the method and the die patents are not for the same invention. The former covers the method, irrespective of the specific means or instrumentalities employed; the latter covers certain specific features of dies used in carrying out the method. These are distinct inventions. The main defense to both patents relied upon in the court below and on this appeal is the alleged anticipation of Simonds' method and dies by the prior English patent granted

Digitized by Google

to William Bundy. Preliminary to the consideration of this question, it may be observed that Simonds' method was radically new in the metal-forging art. It revolutionized the branch of the art to which it relates. It is practically and commercially successful. The Simonds method patent is for "making wrought-metal forgings which are circular in cross-sectional area." It deals with the forging of hot metal. It contains a description of the method, the mode of operation, and refers to different forms of dies which may be employed in carrying out the method. The dies illustrated in the drawings are so shaped as to roll balls, car axles, and other articles circular in cross section. The dies are used in pairs, and have raised working parts. They rotate and shape the blank between them. They travel in parallel lines in opposite directions. At the beginning of the operation the forward ends of the dies are opposite one another, and at the end of the operation the rear ends are opposite one another. The complainant's expert, Mr. Livermore, gives a clear description of the Simonds method and dies:

"Briefly stated, the method consists in acting progressively upon different parts of the surface of the blank, the point of action traveling around the circumference of the blank, and at the same time traveling lengthwise of the blank; or, in other words, being in a spiral path around the blank, beginning at some point between the ends of what is to be the finished forging, and extending gradually towards the ends thereof. The action at each point consists in straining or spreading or crowding the surplus metal of the blank towards the ends, and at the same time compressing the metal that remains in the finished forging to the exact form required at that point. Thus, at any given moment between the beginning of the operation on the blank and the completion of a forging there is a portion of the length of the forging that has been brought to the final shape, and the remainder is at this time completely unformed; and as the operation continues the length of the finished portion is extended towards the ends, until finally the entire length has been completed, the end portion being finished at the last round of the spirally traveling, spreading, and compressing action." "The dies are constructed to be used in pairs in a machine in which they are caused to travel in relatively opposite directions, the distance between the dies, generally speaking (or, more accurately, the maximum distance between the working portions of the dies), being substantially equal to the diameter of the blank; so that, without taking into account the shaping effect of the dies, their action in traveling one past the other upon the blank between them is to rotate or roll the blank much as a pencil is rolled between the hands of a person when sliding one hand along the other, with the pencil lying between the two and at right angles to the line of movement. The two dies stand, at the beginning of the rolling operation, with their forward ends directly opposite one another, and during the rolling movement one die has passed completely over the other, so that at the end of the rolling operation the rear ends of the dies are opposite one another." "The dies have raised working parts, which act upon and shape the blank rolling between them, said raised parts of the dies having a groove or channel extending lengthwise thereof, the cross-sectional shape of the bottom of which channel is the same as the longitudinal outline to be imparted to the forging; so that, if a finished forging were rolled along in the channel of the die, its line of rolling contact would fit the channel. * * * These channels are not, however, of full width for the full length of each die, but are of full width only at the rear end of the die, the sides of the channeled, raised portions being cut away on diagonal lines, which converge from the rear end, where the channel is of full width, towards the front end of the die, where the channel substantially vanishes by reason of the cutting away of its sides. The raised portion of the dies along the sides of the channel are cut away upon planes that slope outward and downward from the line of intersection with the channel. * * * The surface of the

Digitized by Google

bottom of the channel * * * is called the 'forming surface' of the die, as it imparts to the forging the exact form or shape that is desired; while the sloping diverging surfaces at the sides of the forming channel * * * are called 'reducing' and 'spreading' surfaces, as they serve in the operation of the die to crowd the surplus metal of the blank towards the ends of the forging, leaving only the metal which conforms to the shape of the bottom of the channel."

Dr. Coleman Sellers, complainant's expert, says, respecting the Simonds method:

"It is evident that the advantage to be derived from this method of rolling is that steel can be worked at the lowest forging heat, precisely as a blacksmith would work it, and by means of dies that put no undue strain upon the metal, but give the work necessary for a compact forging."

The claim of the method patent is as follows:

"The method herein described of making rolled-metal forgings by acting upon all parts of a metal bar in spiral lines, so as at each part in succession and upon such lines to cause the bar to rotate, and to strain and spread the metal axially, and compress it to the required shape and size."

The Bundy English patent was granted in 1806. It was for an invention of "machines or instruments for the purpose of making leaden bullets and other shot." It was not for forging hot metal. It does not appear that leaden bullets were ever made with the Bundy machine, or that it made any impression on the art of metal working. The specification says:

"The two molds, D, D, have a groove or flute cut in each of them on the side facing the other,—that is, upon the lower side of that which is fixed to the bar A, and upon the upper side of that upon the bed C,—each being half a cylinder, and making, when closed together at the two extremes, F, F, a complete cylindrical hole, the diameter of the ball intended to be made. This hole is continued regularly and equal from F to G, the edges of which then taper gradually off to the extreme circumference of the cylinder, which terminates at the ends of the molds, D, D, at H, H. Suppose, then, a cylindrical piece of lead (or any other proper substance, the end of which is seen at I) nearly of the same diameter (but not less) as the cylindrical hole in the two molds, D, D, when closed together at the two extremes, F, F, is placed across and between the two molds, D, D, at H, H. By drawing the bar, A, A, A, horizontally by a parallel motion to the right, the cylindrical piece of lead will be rolled and gradually pressed and cut away by the sides of the grooves or flutes in the two molds, D, D, which are made sufficiently sharp for that purpose."

There is certainly a close resemblance between the Bundy dies for making lead balls and (apparently) their mode of operation, and the Simonds dies for forging balls and their mode of operation. But the complainant contends that there are important differences, which may be stated as follows: Bundy makes only leaden bullets. Simonds forges various articles circular in cross section from a heated metal blank. Bundy cuts away the surplus lead by sharp cutting edges, and shapes the remainder. Simonds spreads or crowds away the surplus hot metal, and compacts the outer surface of the article forged. Bundy provides corrugations within the grooves to rotate the leaden balls. Simonds places his corrugations outside the grooves so as to rotate the mass of the heated blank. Bundy made no impression on the art. Simonds' patent is the foundation of a new industry. We are not prepared to say that the cutting and molding of the cold lead by the Bundy dies is the same as the spreading and compacting of the

Digitized by Google

hot metal by the Simonds forging dies. Nor are we fully convinced that in mode of operation and result the dies are essentially different.

If the question of identity of method and result is doubtful, the doubt must be resolved in favor of the successful patentee, who has in a practical way materially advanced the art. Washburn v. Gould, 3 Story, 122, 144, Fed. Cas. No. 17,214. In Bundy the corrugations for causing the rolling of the metal are located at the bottom of the forming groove of the die, while in Simonds' they are located outside the forming groove. It appears that dies with Bundy corrugations would be inoperative for forging hot metal. Further, Bundy speaks of the sides of the grooves of the two molds being "sufficiently sharp" to press and "cut away" the lead. This does not accurately describe the Simonds die for spreading, crowding, and compacting the surplus hot metal on the outer surface of the forged article. Again, and perhaps of greater consequence, we are not fully satisfied from the evidence in the record relating to the experiments which were made that the Bundy patent describes practically operative means for making lead bullets. It can, at least, be said, we think, that the Bundy patent does not disclose practically operative means for forging metal articles circular in cross section. Upon the whole we do not find in the Bundy patent a description of the Simonds method in such "full, clear, and exact terms" as are necessary to anticipate the Simonds patents. Hanifen v. Godshalk Co., 28 C. C. A. 507, 84 Fed. 649; Heap v. Tremont & S. Mills, 27 C. C. A. 316, 82 Fed. 449, 452; Consolidated Car-Heating Co. v. American Electric Heating Corp., 82 Fed. 993, 997, on appeal 29 C. C. A. 386, 85 Fed. 662, 665. As it is not seriously contended that any prior patent in the forging art anticipates the Simonds method, it follows that the Simonds method patent is valid, and that the defendants infringe this patent.

We come next to the die patent. This patent is entitled, "Die for forging metal articles circular in cross section." The specification says that the inventor has "invented certain improvements in faces for car-axle dies designed to be used in pairs." The specification further says:

"My invention consists in dies designed to be used in pairs, and provided with forming surfaces raised upon the plane face of the die, and with reducing and spreading surfaces running diagonal to the line of movement of the die, and standing oblique to the plane of the die. My invention further consists, in providing the reducing and spreading surfaces above mentioned, when necessary, with corrugations or irregularities, to engage the metal and insure the rotation of the work."

The claims are as follows:

"(1) Dies adapted to form metal articles circular in cross-sectional area, with the working parts raised upon a plane surface, and provided with forming surfaces running in line with the movement of the die, to give the shape required, and diverging reducing and spreading surfaces to force the metal laterally, substantially as described. (2) Dies adapted to form metal articles circular in cross-sectional area, having forming surfaces to give the shape required, and reducing and spreading surfaces to force the metal laterally, provided with corrugations or irregularities, to engage the mass of metal and insure its rotation, substantially as set forth."

We agree with the court below that the second claim is narrow, and is limited to the corrugations "substantially as set forth." The

Digitized by Google

defendants' dies not having the same corrugations, or the corrugations located in the same situation on the dies, do not infringe this claim. This does not apply to Ball Dies No. 1, and Boot-Calk Dies No. 1, used only by defendant Hathorn, for they have the corrugations in the same location described by Simonds. As to the first claim, however, we do not think it excludes dies for making balls, and is limited to dies for forging car axles, boot calks, and other irregular shaped articles analogous to car axles. We are of opinion that this claim fairly covers "dies for forging metal articles circular in cross section," substantially as described, and that it embraces the dies for forging balls which are used by the defendants. This suit was brought against the Hathorn Manufacturing Company and three individual defendants. The court below limited its decree in favor of the complainant to the joint infringement of all the defendants. We see no sufficient reason, under the present bill, why the defendant Hathorn should not account for his several or individual infringements. We understand this to be the general rule. Herring v. Gage, 3 Ban. & A. 396, 402, Fed. Cas. No. 6,422; Tatham v. Lowber, 4 Blatchf. 86, 87, Fed. Cas. No. 13,765; New York Grape Sugar Co. v. American Grape-Sugar Co., 42 Fed. 455. The decree of the circuit court is modified as to the construction of the first claim of patent No. 319,754, and as to the liability of defendant Hathorn for his several infringements, and the case is remanded to that court for proceedings not inconsistent with this opinion. Costs in this court are awarded to the complainant, the Simonds Rolling-Machine Company.

(93 Fed. 963.)

WARREN v. CASEY et al.

(Circuit Court of Appeals, Third Circuit. May 1, 1899.)

No. 29, March Term.

1. PATENTS—INFRINGEMENT—EYEGLASS CASES.
   A patent for an eyeglass case, having a cover or lid of stiff material, bulged out in the middle, or buckled, so that the edges thereof fit close on the edges of the front piece while at the middle of the cover room is left to fit over the projecting or bulged portion of the front piece of the eyeglasses, *held* not infringed by a case which, among other differences, has a flexible and resilient lid, which is not bulged or buckled, but has a plain surface.
2. SAME—INFRINGEMENT.
   The Warren patent, No. 589,676, for an eyeglass case, construed as limited in view of the prior state of the art to the particular device described, and *held* not infringed.

Appeal from the Circuit Court of the United States for the Eastern District of Pennsylvania.

This was a suit in equity by Roy L. Warren against John Casey and others for alleged infringement of a patent for a new and improved case for eyeglasses. The circuit court held that the patent was void for want of invention, and was also not infringed, and accordingly dismissed the bill. 91 Fed. 653. The complainant appealed.

Digitized by Google

Hector T. Fenton, for appellant.
E. H. Fairbanks, for appellee.

Before ACHESON, Circuit Judge, and BUFFINGTON and KIRKPATRICK, District Judges.

KIRKPATRICK, District Judge. The bill of complaint in this cause charges the defendants with infringement of letters patent of the United States No. 589,676, granted to Roy L. Warren, September 7, 1897, for a new and improved spectacle case. The only claim of the patent is as follows, viz.:

"As a new article of manufacture, an eyeglass case, comprising a pocket, composed of a back plate and a front plate, secured at three of its edges to the back plate; a distance block in the middle of the pocket, to hold the front piece away from the back plate, and protect the nose piece of an eyeglass, the free edge of the front piece cut low to enhance the insertion and removal of an eyeglass; a bulged-out or buckled lid of stiff material, hinged to the upper edge of the back plate of the pocket; and a lock for securing the lid in a closed position, as and for the purposes set forth."

The defenses interposed by the answer are anticipation, nonpatentability, and noninfringement.

A reference to the file wrapper shows that the foregoing claim of the patent was at first rejected by the patent office on reference to prior patents granted Straus (No. 150,126), Sewell (No. 295,949), and to Hauck, Jr. (No. 426,378). The inventor distinguished his device from those disclosed in the patents above referred to by the lid or cover of stiff material and buckled for the purposes set forth, which his device possessed, and which was wanting in the others; and from the patents to Farley (No. 477,235) and to Closs (No. 559,438), which showed distance blocks, because their addition to the Straus, Sewell, or Hauck, Jr., would produce an article different from that described in applicant's specification. This differentiation being satisfactory to the patent examiner, the claim was allowed, and the patent issued. Such allowance and issue carried with it prima facie evidence of novelty and utility. Lehnbeuter v. Holthaus, 105 U. S. 94. This presumption has been strengthened by the testimony of one acquainted with the trade, showing that the device is popular, and has gone into general use. It has not been overthrown by the evidence produced on the part of the defendants, resting, as it does, for the most part on the patent-office references. We are of the opinion, upon the whole case as presented in the record, that the patent is valid.

The specification of the complainant's patent describes the cover or lid of the spectacle case as "bulged out in the middle, or buckled so that the edges thereof fit close on the edges of the front piece, while at the middle of the cover or lid is left room to fit over the projecting or bulged-out portion of the front piece. This cover or lid of stiff material, when closed, gives stiffness and rigidity to the case." It seems to us that, reading the claim of the patent in the light of the specification, the lid or cover of the complainant's spectacle case is required to be a concave lid where the edges are in the same horizontal plane, but the inner portion arches towards a higher center. Being so bulged or buckled, it must be made of stiff material, and so con-

Digitized by Google

structed as to cover the front and reach to the lower edges of the pocket, and thereby give stiffness and rigidity to the case. This was the construction placed upon the claim to obtain allowance in the patent office, and the record shows that the cases were at first made in strict conformity therewith. An examination of the defendants' device shows that its lid is flexible and resilient. It does not cover the lower pocket, and reach to the lower edges, thereby becoming the means of giving stiffness and rigidity to the case. It is not bulged or buckled, but has a plain surface, the surface of which reaches no further than the upper end of the pocket. In all these particulars it differs from the lid or cover required to make the complainant's device. In view of the prior state of the art and the proceedings had in the patent office, the claim of the complainant's patent should be strictly construed against him, and be restricted to the particular device described. Mahn v. Harwood, 112 U. S. 354, 5 Sup. Ct. 174, and 6 Sup. Ct. 451; Sargent v. Lock Co., 114 U. S. 63, 5 Sup. Ct. 1021. We are of the opinion that the charge of infringement has not been sustained by the proofs, and for this reason the decree of the circuit court should be affirmed.

(93 Fed. 965.)

CHRISTY et al. v. HYGEIA PNEUMATIC BICYCLE SADDLE CO. et al.

(Circuit Court of Appeals, Fourth Circuit. May 2, 1899.)

No. 300.

1. PATENTS—INVENTION—BICYCLE SADDLES.
   There is no invention in constructing a bicycle saddle top with vertical, walled depressions, adapted to receive two cushions or pads, and hold them firmly in place.
2. SAME—EVIDENCE OF PATENTABILITY—LARGE SALES.
   Large sales and increasing popularity cannot be accepted as certain proofs of novelty and invention, especially when the article, as made and sold by complainant, differs in many respects from the article shown in the specifications, and covered by the claims.
3. SAME—BICYCLE SADDLES.
   The Christy patent, No. 532,444, for a bicycle saddle having a solid top, with vertical, walled depressions, adapted to receive and hold in place two cushions or pads, is void for want of invention.

Appeal from the Circuit Court of the United States for the District of Maryland.

Julian C. Dowell and Wm. A. Redding, for appellants.

Arthur Steuart and Horace Pettit (Stinson & Williams, on the brief), for appellees.

Before GOFF, Circuit Judge, and BRAWLEY and WADDILL, District Judges.

GOFF, Circuit Judge. This is an appeal from a decree passed by the circuit court of the United States for the district of Maryland dismissing the bill of complaint filed in said court by the appellant, the object of which was to restrain the appellees from manufacturing,

Digitized by Google

selling, or using certain bicycle saddles, which it was alleged in said bill constituted an infringement of the letters patent of the United States, No. 532,444, issued January 15, 1895, to Henry A. Christy, for improvements in a bicycle saddle, which patent, it was claimed, was owned by the complainant company. The complainant below was a corporation organized under the laws of the state of Illinois; and the defendant, a corporation organized under the laws of the state of Maryland. The defenses relied on were the nonpatentability of the invention and noninfringement. The court below held that, in view of the prior state of the art, the claims set up in the patent were invalid, and entered a decree dismissing the bill, from which the appeal we now dispose of was taken. 87 Fed. 902.

We have given due consideration to the appellants' assignments of error, have carefully examined the claims made in support of the patent in suit, and also the insistence that defendants below had infringed the same; and we find ourselves impelled to the conclusion that the validity of said patent depended upon whether it required invention to manufacture the bicycle saddle described therein,—the prior state of the art considered,—and, as we also find that no invention was necessary in order to construct the same, that the patent was invalid, and the bill was properly dismissed. The testimony, all prior patents bearing on the one in controversy, as also the state of the art when said patent was issued, were so fully considered in the opinion of Judge Morris, by which he so clearly demonstrated the invalidity of said patent, that we not only deem it proper, but find it best, to quote the same here in full, approvingly. It is as follows:

"Bill of complaint for the infringement of letters patent No. 532,444, issued to Henry A. Christy January 15, 1895, for bicycle saddle. The defenses are want of patentable novelty and noninfringement.

"The claims of the patent are as follows: '(1) A bicycle saddle having a solid top provided upon its upper surface, with recessed or sunken portions at each side of the seat portion, constructed to receive and hold removable pads,—said recesses being formed with abrupt marginal walls to prevent the pads from slipping,—substantially as described. (2) A bicycle saddle having a solid top provided upon its upper surface, with recessed or sunken portions at each side of the seat portion, constructed to receive and hold pads,—said recesses being formed with abrupt marginal walls to prevent the pads from slipping,—in combination with pads adapted to fit said recesses so as to be removably retained therein, substantially as described. (3) A bicycle saddle having a solid top provided upon its upper surface, with recessed or sunken portions at each side of the seat portion, constructed to receive and hold removable pads, and having a horn portion shortened or truncated so that it will not project between the legs of the rider, and also cut away or recessed upon its upper surface centrally of said horn portion, substantially as described.'

"The complainant contends that claims 1 and 2 are infringed. Claim 3 is not in controversy, for the reason that in the defendant's saddle it is conceded that the horn is not truncated or shortened up so as not to project between the legs of the rider, as called for by claim 3. Claim 1 is for the saddle plate, made with sunken recesses on each side of the center line of the seat; the recesses being formed with abrupt marginal walls to receive and hold removable pads, and prevent the pads from slipping. Claim 2 is for the same device in combination with pads adapted to fit the recesses so as to be removably retained therein. As the defendant's saddle has the removable pads fitted into the recesses, if it infringes either it infringes both claims; and, so far as this case is concerned, claims 1 and 2 may be considered as identical.

"The Christy saddle, as manufactured by the complainant and known to the trade, is quite different in some of its features from the saddle described in

Digitized by Google

the specification and the drawings of the patent, so that the question to be decided in this suit turns, not upon the similarity of the defendant's saddle to that made by the complainant, but upon the validity of the claims of the patent in suit, and the infringement of those claims as explained by the specification. The prior patents put in evidence show that there was nothing new in any of the objects which Christy has in mind to accomplish. Christy states that his object was to lessen the discomfort and injury which bicycle riders suffer from the pressure of the saddle upon the perineum, and from the rubbing of the legs against the horn. In Hicks' patent for a cushion seat designed particularly for bicycles (No. 487,367; October 11, 1892), he states that his object is to obtain a cushion seat that will adjust itself to the shape of the rider, and at the same time prevent injurious pressure against the perineum. This he tried to accomplish by an inflatable cushion, with a covering of any suitable material, secured in any desired manner to a base of some inelastic material, preferably of wood; the cushion to be formed with a fissure extending from the front rearward to any desired extent. He says: 'This fissure prevents upward pressure on the perineum when a person sits thereupon. This fissure may be formed by securing a portion of the top of the cushion intermediate the sides down firmly upon the lower portion thereof, allowing the cushion to be inflated at each side thereof. The fissure may extend only part way towards the rear of the cushion, * * * or it may pass to the rearward limit of the cushion, dividing it into two separate air chambers. * * * Such a form relieves the perineum. * * *' We thus have in Hicks' device an inelastic base upon which are secured two cushions to support the ischial tuberosities of the rider, and separated along the center line of the seat by a vacant space which relieves the perineum from all pressure. This is precisely what is accomplished by the two separate cushions or pads, with the space between them, shown in the Christy saddle, as manufactured by the complainant. In the English patent to Henson (No. 19,840) of 1893, the same object is declared to be the purpose of the bicycle saddle there described, in which there is cut out from the framework of the saddle the portion between the points where the ischial tuberosities are to rest, or a depression is formed in the frame there, so as to leave a vacant space, with nothing to press against the perineum. It is apparent, therefore, that the claim of Christy was rightly restricted to the mechanical device by which a saddle having two separated cushions or pads, with a space between them, might be constructed; his invention, as claimed by him in his patent, being solely for the sunken depressions in the solid saddle top, so formed as to receive the cushions or pads, and prevent the pads slipping. It is conceded that, if cushions or pads similar to those shown in the defendant's saddle are fastened to the top of a saddle without depressions, there is no infringement. The validity of the patent then depends upon whether, in view of the state of the art, it required invention to construct a saddle top with vertical, walled depressions, adapted to receive the two cushions and hold them in place. It is certainly a case in which all that is new in the mode of construction is not very distinguishable from mere mechanical improvement, and, if it can be shown that the idea of the mode of construction was not new, then I think nothing remains but mechanical skill.

"It being conceded that all that the complainant can make claim to is the depressions to receive the pads, it is important to see if that idea, in connection with the seat of a metal-top saddle, was new. It is a matter of observation that a depression, more or less deep, made in a seat in order to receive a cushion, is common and old; and in the English patent in evidence (No. 12,854 of 1889), to Henry Edward Newton, he describes an equestrian saddle to be made of thin sheet steel or iron, in which 'two cup-like depressions are stamped, one depression being on each side of the central axis of the blank. These depressions are subsequently filled up with India rubber, gutta percha, padding, or any other suitable elastic substance, so as to render the seat comfortable and elastic to the rider.' And his claim 2 is for 'the cup-like depressions, F, F, as described, as illustrated in the drawing, for the purposes herein set forth.' This, it seems to me, is the substance of the complainant's specification and claim, viz. in a metal-top saddle, a depression on each side of the axial line, made to receive padding, intended to make the seat elastic

Digitized by Google

to the pressure of the tuberosities of the ischii. Here we have the same problem of a rigid metal seat to be made elastic at the same two points of contact with the rider's body, and the same device to accomplish it, viz. depressed spots in the metal, to be filled with pads. It is urged that there are in the complainant's device the additional elements that the depressions are made with abrupt walls to prevent the pads from slipping, and that the pads are removable, both of which features are asserted to be important and useful improvements. But with cup-like depressions to hold the pads, already shown by Newton's patent, it does not appear that it required invention to make the depressions sufficiently abrupt to prevent the filling from slipping. In his specification, Christy states: 'In my improved saddle I have only a truncated horn: * * * and I also prefer that this truncated horn portion, instead of being convex upon its upper surface, as in the old construction, should be cut away, or concave, centrally thereof, thereby giving room for the portions of the person which are so easily injured. I also preferably make the rear of the saddle wider than ordinarily constructed, so as to sustain the fleshy portions of the buttocks as well as the pelvis, and provide upon each side of the seat portion a sunken portion or recess constructed to receive and hold pads or cushions which may be removably fitted therein for the comfort and ease of the rider.' In the drawings the pads are shown lying in the depressions, and not extending above the plane of the metal top of the saddle. In the Christy saddle, as manufactured, the horn is not truncated, it is not cut away or made concave on its upper surface, and the saddle is not made wide, and does not support the fleshy portion of the buttocks at all. As manufactured, the Christy saddle presents nothing to the body of the rider but the two small pads on which the two ischii rest, sustaining the whole of the rider's weight. Instead of the concavity, the truncated horn being cut out to relieve the pressure on the perineum, there is substituted on the saddle, as manufactured, an open space the whole length of the saddle, from front to rear, between the two cushions, which space, from the cushions being considerably separated, and being built up quite high above the plane of the metal saddle, is both wide and deep. Merit is claimed for the saddle because the cushions are removable, but, as manufactured, they are held in the recesses by catches of twisted wire. Any cushion which is affixed to a solid base may be removed, if the fastenings are released. Great advantage is also claimed because the abrupt walls of the sunken recesses prevent the cushions from slipping. But if it was not new, as is shown by the English patent to Newton, to make the recesses in a metal saddle to receive cushions, it can hardly be said to require invention, when the cushions as used are liable to slip, to make the recesses sufficiently abrupt to prevent slipping. The strongest and most persuasive argument which the complainant urges in favor of the patentability of the Christy saddle is based upon the testimony showing the rapidly increasing sales and its decided popularity since it has become known upon the market. But the saddle manufactured differs so widely from the saddle shown in the specification and drawings that it is not easy to determine just what features make it acceptable to the trade and to those who use it. It would appear that some of the features of the saddle as manufactured, which are not shown in the saddle as patented, possess more novelty and utility than those described in the patent. It may be well that the advantages of the manufactured saddle result from the fact that the saddle plate is reduced in size until it is nothing more than a support for the two pads, and has no bearing at all for the fleshy portion of the buttocks, so that the rider's weight rests exclusively upon the two ischii of the pelvis, and also from the fact that the interval between the cushions or pads leaves an open space from front to back similar to that shown in the Hicks patent, through which there can be a current of air, and because of which there can be no pressure upon the perineum. It seems quite probable that it may be these unpatented features, not shown in the specifications or drawings, which have given the Christy saddle the acceptance which it has obtained, rather than any advantage of construction arising from the fact that the pads are set in depressions and are detachable. It may also be that, with the enormously increased use of bicycles, experience may have taught particular riders that in the long run it is less injurious to use one kind of a saddle than

Digitized by Google

another, although not so agreeable at first. The fact of comparative utility, when the acceptance of the improved device may just as well be attributed to features not claimed in the patent, is an unsafe guide in determining the existence of patentable invention.

"Upon the whole case, considering the prior state of the art, I have been forced to the conclusion that it did not require invention to form the recesses on the surface of a solid-top saddle with abrupt marginal walls to receive the pads and keep them from slipping."

Appellant claims that the fact that the saddle manufactured by it so soon went into extensive use, and largely superseded the saddles made prior to the date of the patent in suit, is evidence, not only of novelty and value, but also of usefulness and invention. It must be conceded that the sales were phenomenally large, and that the evidence shows the Christy saddle was received with great favor by those who used the bicycle; and also it may be admitted that it not only added to their comfort, but contributed to their safety. But still we do not think that it follows that, therefore, invention was required to design and construct it. On this question the supreme court of the United States, in McClain v. Ortmayer, 141 U. S. 419, 12 Sup. Ct. 76, said:

"That the extent to which a patented device has gone into use is an unsafe criterion, even of its actual utility, is evident from the fact that the general introduction of manufactured articles is as often effected by extensive and judicious advertising, activity in putting the goods upon the market, and large commissions to dealers, as by the intrinsic merit of the articles themselves. The popularity of a proprietary medicine, for instance, would be an unsafe criterion of its real value, since it is a notorious fact that the extent to which such preparations are sold is very largely dependent upon the liberality with which they are advertised, and the attractive manner in which they are put up, and exposed to the eye of the purchaser. If the generality of sales were made the test of patentability, it would result that a person, by securing a patent upon some trifling variation from previously known methods, might, by energy in pushing sales, or by superiority in finishing or decorating his goods, drive competitors out of the market, and secure a practical monopoly, without in fact having made the slightest contribution of value to the useful arts. The very case under consideration is not barren of testimony that the great success of the McClain pads and clasping hooks, a large demand for which seems to have arisen and increased year by year, is due partly, at least, to the fact that he was the only one who made the manufacture of sweat pads a specialty; that he made them of a superior quality, advertised them in the most extensive and attractive manner, and adopted means of pushing them upon the market, and thereby largely increased the extent of their sales. Indeed, it is impossible from this testimony to say how far the large sales of these pads is due to their superiority to others, or to the energy with which they were forced upon the market. While this court has held in a number of cases—even so late as Magowan v. Packing Co., 141 U. S. 332, 12 Sup. Ct. 71, decided at the present term—that in a doubtful case the fact that a patented article had gone into general use is evidence of its utility, it is not conclusive even of that; much less, of its patentable novelty."

The United States circuit court of appeals for the Ninth circuit, in the case of Klein v. City of Seattle, 44 U. S. App. 741, 23 C. C. A. 114, and 77 Fed. 200, used the following language, which we think applicable to the case now under consideration:

"A patent must combine utility, novelty, and invention. It may in fact embrace utility and novelty in a high degree, and still be only the result of mechanical skill, as distinguished from invention. A person, to be entitled to a patent, must have invented or discovered some new and useful art, ma-

Digitized by Google

chine, manufacture, or composition of matter, or some new and useful improvement thereof. In the language of the supreme court: 'It is not enough that a thing shall be new, in the sense that, in the shape or form in which it is produced, it shall not have been before known, and that it shall be useful, but it must, under the constitution and statute, amount to an invention or discovery.' Hill v. Wooster, 132 U. S. 693, 701, 10 Sup. Ct. 228, 231, and authorities there cited. A mere difference or change in the mechanical construction, in the size or form of the thing used, in order to obviate known defects existing in the previous devices, although such changes are highly advantageous, and far better and more efficacious and convenient, does not make the improved device patentable. In order to be patentable, it must embody some new idea or principle, not before known. It must, as before stated, be a discovery, as distinguished from mere mechanical skill or knowledge. Atlantic Works v. Brady, 107 U. S. 192, 200, 2 Sup. Ct. 225; Hollister v. Manufacturing Co., 113 U. S. 59, 5 Sup. Ct. 717; Thompson v. Boisselier, 114 U. S. 2, 11, 5 Sup. Ct. 1042; Trimmer Co. v. Stevens, 137 U. S. 423, 433, 11 Sup. Ct. 150; Andrews v. Thum, 33 U. S. App. 39, 15 C. C. A. 67, and 67 Fed. 911."

In Grant v. Walter, 148 U. S. 547, 13 Sup. Ct. 699, the supreme court, speaking by Mr. Justice Jackson, said:

"The most that can be said of this Grant patent is that it is a discovery of a new use for an old device, which does not involve patentability. * * * The advantages claimed for it, and which it no doubt possesses to a considerable degree, cannot be held to change this result; it being well settled that utility cannot control the language of the statute, which limits the benefit of the patent laws to things which are new as well as useful. The fact that the patented article has gone into general use is evidence of its utility, but not conclusive of that, and still less of its patentable novelty."

The supreme court of the United States, in the case of Aron v. Railway Co., 132 U. S. 84, 10 Sup. Ct. 24, said, as stated in the syllabus of said case:

"The same devices employed by him [the patentee] existed in earlier patents. All he did was to adapt them to the special purpose to which he contemplated their application, by making modifications which did not require invention, but only the exercise of ordinary mechanical skill; and his right to a patent must rest upon the novelty of the means he contrived to carry his idea into practical application."

We find no error in the decree appealed from, and it is affirmed.

(93 Fed. 970.)

RYAN v. RUNYON et al.

(Circuit Court of Appeals, Third Circuit. May 4, 1899.)

No. 4. March Term.

1. PATENTS—INFRINGEMENT—SPRING MATTRESSES.

A patent for an improved spring mattress made in two parts, and in which a conspicuous feature is the manner of hinging the two sections together by means of a continuous unbroken woven-wire facing, free from the ridge or hard unyielding hinge piece found in other hinged mattresses, is not infringed by a mattress in which the two sections have a central longitudinal iron brace or tie rod, which also acts as a hinge rod, running through the upper facing or web of the mattress from end to end.

2. SAME.

A patent for a bed bottom, in which the novelty consists altogether in connecting the ends of the transverse stiffening rods or strips to the side

Digitized by Google

edges of the woven-wire fabric, is not infringed by a mattress in which there is no such connection, and which has its transverse tie wires attached at their outer ends to the frame.

3. SAME.

The Gail patent, No. 399,867, for an improvement in woven-wire mattresses or bed bottoms, construed, as limited by the prior state of the art to the specific form shown and described, and *held* not infringed.

4. SAME.

The Ryan patent, No. 403,143, relating to woven-wire mattresses or bed bottoms, construed, as limited by the prior state of the art to the specific constructions shown, and *held* not infringed.

Appeal from the Circuit Court of the United States for the District of New Jersey.

Stephen J. Cox, for appellant.
C. Godfrey Patterson, for appellees.

Before ACHESON and DALLAS, Circuit Judges, and BUFFINGTON, District Judge.

ACHESON, Circuit Judge. This bill charges the defendants with the infringement of two letters patent,—one of them being No. 399,867, dated March 19, 1889, granted to Daniel H. Gail and John F. Gail, and the other of them being No. 403,143, dated May 14, 1889, granted to James B. Ryan. Each of the patents in suit relates to woven-wire mattresses or bed bottoms. It appears as well by the general proofs in the case as from the specifications themselves that these patentees were improvers in an old art. Manifestly neither of the patents is for a primary invention. In each instance patentability may be conceded. Nevertheless, these inventions, by reason of the state of the prior art, belong to that class in which the patentee is to be restricted to the specific form of improvement shown and described by him. Railway Co. v. Sayles, 97 U. S. 554; Duff v. Pump Co., 107 U. S. 636, 2 Sup. Ct. 487. The distinguishing feature of the invention of the patent first above cited (No. 399,867) is thus clearly set forth in a written communication found in the file wrapper from the applicant's solicitor to the commissioner of patents, in answer to adverse citations of prior patents referred to by the office as anticipatory:

"His invention consists in the manner of hinging the two sections of a spring mattress by means of a continuous unbroken woven-wire facing, which not only presents an unbroken surface from side to side, as well as from end to end, of the mattress, but in itself forms a hinged connection between the two folding sections free from the ridge or hard unyielding hinge piece found in other hinged mattresses. The perfect smoothness and uniformity of bearing surface of a single mattress supported upon spiral springs is thus secured, with the convenience attending a mattress which is hinged to double and fold over upon itself, and such a combination is not found in the references."

The specification of the patent gives great prominence to this feature of the improvement, namely, the unbroken woven-wire facing. Thus it states:

"The improved double mattress is constructed of an upper facing or section, A, which is made to extend in an unbroken sheet from side to side of the bed, and of two longitudinal lower sections hinged together lengthwise by means of the upper section, to which they are attached." Again: "The unbroken

Digitized by Google

upper facing or section, A, of the woven wire is stretched upon two metallic frames, B B, each of which is formed of a single iron bar bent to inclose three sides of a rectangle, the fourth side being left open." And still again: "The two frames, B B, are placed so as to bring their open sides opposite each other at the middle of the woven-wire sheet, A, at which point the ends of the wire frames, B B, are bent inward, and enter adjacent coils of the woven web, a, as shown in Fig. 1, which thus becomes a hinge for said frames, B B, so that they may fold over on said middle line, e e, one upon the other."

Now, the defendants' mattress does not have the unbroken woven-wire facing of the patent. That distinctive feature of the Gail invention is entirely wanting in the defendants' bed bottom. On the contrary, a central longitudinal iron brace or tie rod, which also acts as a hinge rod, runs through the upper facing or woven web of the defendants' mattress from end to end. The advantages which the patentees describe and claim for their mattress are not attained by the defendants. In this respect the case is like that of Burns v. Meyer, 100 U. S. 671, where it was held that there was no infringement. We agree with the circuit court that these two mattresses or bed bottoms are materially different, and that the defendants do not infringe the Gail patent.

We concur, also, in the conclusion of the court below with respect to the other patent sued on,—No. 403,143. The claim of this patent alleged to be infringed is the first, which is as follows:

"(1) In a bed bottom composed of a frame and a woven-wire fabric, the combination, with such fabric, of stiffening rods or strips passed transversely through its meshes, and having their ends connected to the side edges of the fabric, substantially as described."

The novelty of this claim consists altogether in connecting the ends of the transverse stiffening rods or strips to the side edges of the woven-wire fabric. The defendants, however, do not make such connection. The transverse tie wires in their bed bottom are attached at their outer ends to the frame. Therefore the court was right in holding that there was no infringement of this patent. We find no error in this record, and hence the decree of the circuit court is affirmed.

(93 Fed. 972.)

BRIGGS v. DUELL, Commissioner of Patents.

(Circuit Court of Appeals, Second Circuit. April 4, 1899.)

No. 43.

1. PATENTS—ANALOGOUS USE.

   There is no invention in merely applying and adapting, to the planing and grooving of cakes of ice, mechanism previously used in the planing of wood.

2. SAME—REISSUE—APPARATUS FOR PLANING CAKES OF ICE.

   The incorporation, into the first claim of the Briggs patent, No. 367,267, for an apparatus for planing cakes of ice (which claim was adjudged invalid by the circuit court of appeals), of new matter describing a cutter consisting of a number of points, which will not only cut, but groove, the ice in one operation, and of an ice elevator adapted to force the ascending cakes of ice into contact with the cutter, would not make the claim patentable, so as to warrant a reissue.

Digitized by Google

Appeal from the Circuit Court of the United States for the District of Connecticut.

This cause comes here upon appeal from a decree of the circuit court, district of Connecticut, dismissing the bill. 87 Fed. 479. The facts are sufficiently set forth in the opinion.

Benjamin F. Lee, for appellant.

W. A. Megrath, for appellee.

Before WALLACE, LACOMBE, and SHIPMAN, Circuit Judges.

LACOMBE, Circuit Judge. On July 26, 1887, a patent (No. 367,-267) was granted to the complainant for new and useful improvements in apparatus for planing cakes of ice for storing. Upon this patent suit was brought against the Central Ice Company in the Northern district of New York to restrain infringement of its first claim. Judge Coxe, who heard the cause at circuit, held that there was no infringement. 54 Fed. 376. An appeal was thereupon taken to this court. The claim there in question read as follows:

"(1) The combination, with the cutter head and the racks directly attached thereto, of the guides for both cutter head and the racks, arranged perpendicularly to the plane of the elevator, the pinions mounted on said guides and engaging in said racks, and the levers or arms for operating said pinions, all constructed substantially as described, so that the depth of the cut may be directly and positively regulated by means of the levers, as herein specified."

This court reviewed the state of the art, including patents to Chaplin (271,220), Smith (310,093), and Loring and Giles (329,400), and finding, in a patent to Butterfield (24,076, May 17, 1859), for a wood-plane attachment, the "same combination found in complainant's patent of cutter head, guides, racks, pinions, and levers," held that, in contemplation of law (of course, in fact, Briggs had never heard of Butterfield), the patentee "merely transported the devices of Butterfield into the old elevator, and cut away the useless feed roller." The conclusion was that the claim was invalid for lack of invention. Briggs v. Ice Co., 8 C. C. A. 480, 60 Fed. 87. The patentee thereupon applied for a reissue upon an application which contained several claims, of which the following only is now in controversy. For convenience of comparison, the new matter inserted in the claim is italicized:

"(3) The combination with the cutter head, and the racks directly attached thereto, of the guides for both cutter head and the racks, arranged perpendicularly to the plane of the elevator, the pinions mounted on said guides and engaging in said racks, and the levers or arms for operating said pinions, *a cutter consisting of a number of points entering the ice in such a manner as not only to cut but to groove it at one operation, and an ice elevator adapted to positively force the ascending cakes of ice into contact with the cutter and groover*, all constructed substantially as described, so that the depth of the cut may be directly and positively regulated by means of the levers, *and the ice at the same time properly grooved for storage*."

It will be perceived that the phraseology of this claim calls for two elements not enumerated in the first claim of the original patent,—the ice elevator, and the multipoint cutter and groover. It will be perceived, from an examination of our former decision, that the ice

Digitized by Google

elevator, although not specifically mentioned, was regarded as an element of the claim. It was also understood that some kind of a cutter was necessary to make the machine practically useful, and to enable the operator to regulate the depth of the cut. In the proposed reissue the combination is restricted to a peculiar variety of cutter, which, however, was not in itself new. Briggs himself had shown it in the specifications of his patent, No. 346,576 (August 3, 1886), calling attention to the circumstance that such a cutter would groove the ice, as well as cut it, and in the reissue of this earlier patent (reissue No. 11,060, February 18, 1890) this double function of grooving and planing is made the subject of a specific claim. The application for a reissue of No. 367,267 (which application was filed July 16, 1894) was rejected by the patent office, upon the authority of Briggs v. Ice Co., supra, as appears from the opinions of the examiners in chief and of the commissioner of patents. The patentee thereupon appealed to the court of appeals of the District of Columbia, which affirmed the decision of the commissioner of patents. 9 App. D. C. 478. Thereupon he filed a bill in equity for this decree, in accordance with the provisions of Rev. St. U. S. § 4915. The cause came before Judge Townsend upon pleading and proofs. The bill was dismissed (Briggs v. Duell, 87 Fed. 479), and from decree of dismissal this appeal is taken.

The argument has taken a somewhat wide range, embracing practically a reargument of questions passed upon in our opinion upon the original patent. Upon this branch of the subject it will be sufficient to say that we see no reason to modify the opinion heretofore expressed. It will be necessary only to examine the new facts upon which complainant relies to make out a case not covered, as he contends, by the former opinion.

1. Attention is called to the circumstance that, when the former opinion of this court was handed down (February 27, 1894, 60 Fed. 87), the supreme court had not decided Potts v. Creager (1895) 155 U. S. 597, 15 Sup. Ct. 194. It is not thought, however, that that case lays down any new principles of law, nor that it has overruled the earlier decisions which were cited in Briggs v. Ice Co. On the contrary, it indicates quite clearly that the question of so-called double use—whether, that is to say, the new use is so nearly analogous to the former one that the applicability of the device to its new use would occur to a person of ordinary mechanical skill—is one dependent upon the peculiar facts of each case. It would be difficult to find uses more analogous than we have here. If the apparatus for raising and lowering had, in its earlier use, been applied, for instance, to the movement of ore buckets in a shaft, it might, perhaps, be urged that the analogy was imperfect; but here in both applications the apparatus moves a cutter (which is itself to remove surplus material) to the place where the operator wishes it to cut. It would seem to make little difference that the workmen who plane wood do not plane ice. In Potts v. Creager the supreme court approved their former decision in Brown v. Piper, 91 U. S. 40, where a patent for preserving fish for food purposes was held to be without patentable novelty, in view of an earlier patent for a "corpse preserver" used in the under-

Digitized by Google

taker's art. See, also, Stearns v. Russell, 29 C. C. A. 121, 85 Fed. 218; Rogers v. Fitch, 27 C. C. A. 23, 81 Fed. 959.

2. It is next contended that the new matter introduced in the claim removes it from the operation of the opinion in Briggs v. Ice Co. As already pointed out, the express inclusion of the ice elevator as an element involves no change; it was read into the claim in our former opinion. The addition of the peculiar cutter and groover of the patentee which had already, by his own act in taking out No. 346,576 (reissue No. 11,060), been made a part of the prior art, does not change the situation. It adds nothing new to the combination, which remains a combination of old devices, just as it was in the original patent.

3. It is contended that undue weight was given to the Butterfield patent in our former opinion. The model, which was filed with application for that patent and which was damaged by the fire which occurred in the patent office in 1877, has been found, and the experts on both sides have testified as to the inferences which they draw from it. It exhibits a hole in the frame of the machine, and a slot in the knife-carrying frame. There is no reference to these in the specifications, nor are they shown in the drawings, nor is there anything in the patent to indicate what purpose they were intended to subserve. Complainant's expert draws the inference that they were devised so that a set screw might be used to clamp the knife-bearing frame after the racks and pinions had raised or lowered the knife to its desired position. Defendant's expert suggests that we may quite as fairly infer that they were adapted to receive "a rod or stop which might brace the frame, or hold the knife frame from falling upon the rollers at the bottom." In the absence of any reference to a set screw, either in the specifications, claims, or drawings, we are not inclined to give much weight to either of these inferences. Nor does the evidence satisfy us that the machine of Butterfield would be inoperative without a set screw. And, even if irregularities in the boards to be planed would at times destroy the adjustment of the knife (unless a set screw were used), as complainant's expert claims, by reason of the increased pressure of the plank against the feed roller, causing the latter to rise and carry the rest of the frame with it, that difficulty would disappear with the disappearance of the feed roller; and, as was stated in Briggs v. Ice Co., "it is obvious that the feed roller would be unnecessary in an ice-planing machine," where the substance to be cut is fed forward by the moving base on which it rests. The decree of the circuit court is affirmed, with costs.

Digitized by Google

(93 Fed. 980.)

AMERICAN SUGAR-REFINING CO. v. MADDOCK.

(Circuit Court of Appeals, First Circuit. May 12, 1899.)

No. 279.

SHIPPING—LIABILITY OF CARRIER FOR SHORTAGE IN CARGO—EFFECT OF BILL OF LADING SIGNED BY MASTER.

The rule that the master of a vessel has no authority by virtue of his position, either actual or apparent, to sign a bill of lading for cargo not actually received on board, applies when there is only a deficiency in part through mistake, and the owner cannot be held liable, either by the original consignee or an indorsee of the bill of lading, for such a shortage, where the quantity actually received is delivered.

Appeal from the District Court of the United States for the District of Massachusetts.

Charles T. Russell and Arthur H. Russell, for appellant.
Eugene P. Carver (Edward E. Blodgett, on brief), for appellee.

Before COLT and PUTNAM, Circuit Judges, and WEBB, District Judge.

PUTNAM, Circuit Judge. In this case, the American Sugar-Refining Company purchased, in Cuba, a quantity of sugar in bags, and paid in full therefor. The parties of whom it purchased shipped the sugar by the steamer Salamanca, and took a bill of lading for a precise number of bags named, which also gave the weight. The bill of lading contained also the following words: "Weight and contents unknown." It acknowledged that the sugar was shipped by the parties of whom the cargo was purchased, and it ran in favor of the American Sugar-Refining Company and its assigns, deliverable at Boston. It is admitted that the steamer delivered all the sugar which she received, but the delivery was short of the bill of lading 37 bags. There was no claim that there was any shortage in weight. The American Sugar-Refining Company claims to be allowed the value of 37 bags, estimated at the average weight per bag of the whole cargo, and this is the issue in the case. The proceeding below was by a libel in personam in the district court, and the decision was in favor of the owner of the vessel. 91 Fed. 166.

In The Freeman, 18 How. 182, it was held that neither a vessel nor her owners were liable in that case in favor of a bona fide holder of a bill of lading, it having been shown that none of the goods called for by it were shipped. The American Sugar-Refining Company, however, maintains that there is a substantial distinction between a case where a bill of lading is issued fraudulently, or where no merchandise called for by it was in fact shipped, and the case at bar, where it is claimed that the master erred innocently in his count, and there is only a small shortage in what the shipping documents call for. It is not denied that, as towards an original holder of a bill of lading, it stands as a mere receipt, so far as the amount of merchandise called for by it is concerned, and is therefore subject to ex-

Digitized by Google

planation; but it is claimed that in the present case the American Sugar-Refining Company stands in the position of an innocent indorsee of a bill of lading for value, and that the vessel is therefore estopped so far as concerns the shortage. The American Sugar-Refining Company is not in form an indorsee, and it does not appear distinctly that it made payment to its correspondents in Cuba on the faith of the bill of lading; and it may well be, in any event, that it should deal for the shortage with the parties of whom it purchased the sugar and who shipped it, and not with the vessel. However, the case has been submitted by both parties on the theory that the American Sugar-Refining Company stands in the position of an innocent indorsee for value.

With reference to the distinction attempted to be made by the American Sugar-Refining Company, none of the authorities relied on by it sustain it, except the local decisions of the state courts of New York. With those exceptions, the entire weight of authority which ought to influence us, recognizes no distinction, and we perceive no principle of law which should require them to do so. The Freeman, already referred to, treats of this question. At page 191, the opinion says that the master has no more an apparent unlimited authority to sign bills of lading than he has to sign bills of sale of the vessel. It says he has an apparent authority, if the ship be a general one, to sign bills of lading for cargo actually shipped, but his act does not bind the owner, even in favor of an innocent purchaser, if the facts on which his power depends do not exist; and the court adds: "It is incumbent upon those who are about to change their condition upon the faith of his authority to ascertain the existence of all the facts upon which his authority depends." It also says it takes the law to be now settled by several cases cited, among the rest Grant v. Norway, 10 C. B. 665, thus approving that decision.

Grant v. Norway (decided in 1851) is a case of very great authority, having been heard in the common pleas by Chief Justice Jervis, Justice Cresswell, and Justice Williams. At page 688 the opinion says that the court cannot discover any ground on which a party, taking a bill of lading by indorsement, would be justified in assuming that the master had authority to sign such bills whether the goods were on board or not. It also states that it is generally known that the master derives no such authority from his position as master, so that the case may be considered as if the party taking the bill had notice of an express limitation of his authority. On page 689 it says:

> "So here the general usage gives notice to all people that the authority of the captain to give bills of lading is limited to such goods as have been put on board; and the party taking the bill of lading, either originally or by indorsement, for goods which have never been put on board, is bound to show some particular authority given to the master to sign it."

Another leading case is McLean v. Fleming, L. R. 2 H. L. Sc. 128, decided in 1871. The facts were almost like the case at bar, in that the bill of lading was taken out by the persons from whom the merchandise was purchased, running to the purchaser. It covered a cargo of cattle bones. There was a nominal shortage of 210 tons, and the cases already cited were applied; the lord chancellor stating, at

Digitized by Google

page 130, that the master has no authority to sign bills of lading for a greater quantity of goods than actually put on board. Grant v. Norway and McLean v. Fleming are usually cited in England wherever this question is referred to. The latter case especially is like the one at bar, not only in the circumstances already stated, but also in that no fraud on the part of the master was alleged. In Cox v. Bruce, 18 Q. B. Div. 147 (decided by the court of appeal in 1886), the same rule was given as to an indorsee of a bill of lading; Lord Esher, M. R., stating, at page 152, the effect of the decision in Grant v. Norway to be, not merely that the captain has no authority to sign a bill of lading in respect of goods not on board, but that the nature and limitations of his authority are well known among mercantile persons. Carv. Carr. by Sea (2d Ed.; 1891), in section 69, states the rule as follows: "This description and statement of quantity are evidence against the shipowner that goods of that kind and amount have been shipped. But they are not conclusive. He may show that they are incorrect, whether the claim be by consignees on whose account the shipment was made or by indorsees of the bill of lading." It is also added: "And this does not depend upon words of reservation, such as 'weight and contents unknown,' being inserted in the bill of lading." This last expression shows, if it was necessary to show it, that the presence of like words in the bill of lading in suit does not affect the case. Abb. Shipp. (13th Ed.; 1892), at page 368, states the same general rule, and adds, even as against an indorsee for value: "If the quantity of goods shipped is uncertain, the master cannot bind his owners by acknowledging receipt of a specific quantity of goods." McLean v. Fleming is cited in support of this proposition. Macl. Shipp. (4th Ed.; 1892), lays down the same general rule in broad terms, citing McLean v. Fleming and Grant v. Norway, without making any distinction between fraud and mistake on the part of the master, or between cases where there is no shipment or only a partial shipment.

Among the cases cited by the American Sugar-Refining Company, we need notice only Shepherd v. Naylor, 5 Gray, 591, Sears v. Wingate, 3 Allen, 103, and 1 Pars. Shipp. & Adm., at page 190, where these cases are referred to. These authorities discuss the power of a master to bind the owners by statements in bills of lading as to the rate of freight and certain other matters, and also discuss under what circumstances the master himself may be liable for an excess statement in a bill of the amount shipped, but, on the question before us, they weigh against the American Sugar-Refining Company instead of for it. Other citations relied on are mere dicta, uncertain in expression, and of no weight as against the mass of authorities to which we have referred. The libel was filed in the court below to recover a balance of freight against which the American Sugar-Refining Company sought to recoup the shortage which we have stated. The decree below was in favor of the vessel, and it should be affirmed. The decree of the district court is affirmed, with interest, and the costs of appeal are awarded to the appellee.

Digitized by Google

(93 Fed. 984.)

HAYS v. JAMES REES & SONS CO.

(Circuit Court of Appeals, Third Circuit. May 8, 1899.)

No. 20, March Term.

MARITIME LIENS—EQUIPMENT FOR VESSEL—NECESSITY FOR DELIVERY.

Under the Pennsylvania statutes, either Act June 13, 1836, as amended by Act June 24, 1895, or Act April 20, 1858, relating to liens for work done or materials furnished in the building or equipment of vessels, a delivery of an article made for the equipment of a steamer, either by placing it in the vessel or delivering it to the owners, is essential to create a lien on the vessel therefor.[1]

Appeal from the District Court of the United States for the Western District of Pennsylvania.

Charles S. Crawford, for appellant.

J. S. Ferguson, for appellee.

Before ACHESON and DALLAS, Circuit Judges, and KIRKPATRICK, District Judge.

DALLAS, Circuit Judge. The appellee, upon the order of the owners of the steamer Cyclone, made a shaft, bedplate, and pillow block for that vessel. The price agreed upon was $725.40. The work was done, and what thereafter occurred appears from the testimony of Mr. James M. Rees, as follows:

"Q. Captain, you are the president of the James Rees & Sons Company? A. No, sir; vice president and general manager. Q. Captain, your claim against the steamer Cyclone has been objected to by Mr. Crawford, for the reason that it appears by the testimony of D. A. Rees that your charges under date of December 31, 1896, amounting to $687.16, were for one new shaft extra for the boat, and fittings,—material charged for which had not been delivered. I will ask you whether or not that shaft is still in the shop of your company. A. I believe it is; yes, sir. Q. And will you explain why the shaft was permitted to remain there, and why it wasn't delivered to, and put upon, the boat? A. The shaft was ordered as an extra, and made some time after being received, and then the fittings for the shaft was ordered, so that, in case of emergency, they would have the extra shaft ready to put on the boat in a short space of time, without losing or causing any delay. Q. Mr. D. A. Rees testified that the shaft and fittings were permitted to remain in your shop at the request of one of the owners of the Cyclone. Do you know anything about that? A. Yes, sir; I personally requested Mr. Posey to take the shaft away, as it was in the way. He then told me to fit it up as far as I could, and hold it subject to their order where to deliver it, and, in case I could hold it there, as long as possible to do so, but, when it became too much in the road, then to set it out on the bank, any place where they might get it. Now, that was somewheres about a year ago. On becoming busy last fall,—in January,—I took everything that was in the shop, and piled it at one end, in a promiscuous pile, by the crane. That shaft to-day, among three that was there, is on top of four pairs of cylinders and two other shafts, and about eight feet from the ground. Q. Did you take any note from the steamer Cyclone for your account or any part of it? A. Yes, sir. Q. I show you note dated July 1, 1897, made by the steamer Cyclone and owners to the order of your company for $873.53, payable two months after date, and ask you

[1] As to maritime liens under state statutes, see note to The Electron, 21 C. C. A. 21.

Digitized by Google

whether or not that note included the charges for the extra shaft and fittings. A. Yes, sir; that is a note received in our account, and includes the shaft, six months after we had entered it in our books in settlement of the account up to that date."

Upon the facts and under the circumstances disclosed by this evidence, did James Rees & Sons Company have a lien for the shaft and other articles referred to? The Cyclone having been sold under admiralty process, and the proceeds brought into the district court for distribution, that court held that such a lien did exist, and decreed accordingly. The learned judge found that the articles had been delivered, and therefore held that the case fell within the purview of the Pennsylvania statute of June 13, 1836, as amended by the act of June 24, 1895, by which a lien is given "for all work done and materials and supplies furnished or provided in the building, repairing, fitting, furnishing, supplying or equipping of such ships or vessels." We are unable to concur in this view. We incline to think that the act of April 20, 1858, is more nearly applicable than that of June 24, 1895; but, be this as it may, we do not doubt that delivery is, under either act, essential to lien. It is not necessary to decide whether it be requisite that the articles should be placed upon the vessel itself; but that the possession must be transferred, either to the vessel or to its owner or proper representative, we think is unquestionable. James Dalzell's Son & Co. v. The Daniel Kaine, 31 Fed. 748. In the present case there was in fact no change of possession, and the reason for this is not, in our opinion, material.

The motion to quash is not well founded. The position now assumed in support of that motion was not taken in the court below, and the fact that the appellant bought the steamer Cyclone from the sheriff of Washington county, on the 6th day of May, 1898, is distinctly shown by the record before us.

The decree of the district court is reversed, and the cause will be remanded to that court for further proceedings to be there taken in pursuance of this determination.

(93 Fed. 936.)

SOUTHERN EXP. CO. v. PLATTEN.

(Circuit Court of Appeals, Fifth Circuit. February 21, 1899.)

No. 727.

1. CORPORATIONS—LIABILITY FOR TORTS OF AGENTS—SCOPE OF EMPLOYMENT.
   A declaration, in an action against a corporation for personal injuries, which alleges that defendant employed certain detectives to investigate an alleged robbery, and that in the course of such employment such detectives, with other persons procured by them, committed an assault on plaintiff for the purpose of compelling him to confess to the commission of the robbery, and inflicted the injuries sued for, states sufficient facts to connect the defendant with the injury, and to charge it with liability therefor; the means employed by its agents in the investigation being left to their discretion, in the exercise of which they were within their authority. A ratification or repudiation of their acts by defendant after they were committed, and plaintiff's right of action had accrued, would be immaterial.

Digitized by Google

2. SAME.
Under the modern rule adopted by the courts, a corporation is liable at common law for torts committed by its servants or agents, precisely as a natural person would be.

3. PLEADING—DECLARATION IN TORT.
A declaration to recover for an assault alleged to have been committed on plaintiff by representatives and agents of defendant in the course of their employment is not demurrable because it fails to state the names of some of the assailants, alleged to be unknown to plaintiff.

4. DAMAGES FOR ASSAULT AND BATTERY—MENTAL SUFFERING.
In an action of tort to recover damages for an assault and battery, where there is proof of substantial physical hurt and injury, the plaintiff is entitled to recover compensation for the mental pain and suffering that necessarily resulted from the original injury.

5. EVIDENCE OF AGENCY—ACTS OF ALLEGED AGENT.
Acts of an alleged agent tending to show the exercise of control and authority over the business of the principal, and declarations and statements of agency made in the presence of other known agents, are admissible to establish the agency.

6. PLEADING—VARIANCE—AMENDMENT DURING TRIAL.
The action of a trial court in denying a motion for judgment on the ground of a variance, and in permitting the amendment of the declaration, after the conclusion of plaintiff's evidence, to conform to the proof, is not an abuse of discretion, where it is not claimed that defendant was misled by the variance to his prejudice.

Pardee, Circuit Judge, dissenting.

In Error to the Circuit Court of the United States for the Southern District of Florida.

John F. Hartridge, for plaintiff in error.

H. P. Logan, J. W. Brady, and F. M. Hammond, for defendant in error.

Before PARDEE, Circuit Judge, and SWAYNE and PARLANGE, District Judges.

SWAYNE, District Judge. This is an action originally brought by John J. Platten, Jr., defendant in error, against the Southern Express Company, a corporation under the laws of the state of Georgia, plaintiff in error, to recover damages for personal injury inflicted upon him by reason of an assault with deadly weapons committed by certain employés of the defendant company. The suit was originally brought in the circuit court, Pope county, Fla., but was afterwards removed by the defendant company into the circuit court of the United States for the Southern district of Florida. The facts alleged by the plaintiff in his declaration, and proved on trial, except as hereinafter qualified, are as follows: That on or about the 1st day of April, 1897, the office of the defendant company situated in the town of Bartow, Fla., was robbed of the sum of $2,500, and that shortly thereafter the defendant company sent its agents, W. T. Sherrett and C. L. Myers, to the town of Bartow aforesaid, for the purpose of investigating the said robbery, and to procure, if possible, evidence sufficient to convict the person or persons who perpetrated the same; that the said W. T. Sherrett and C. L. Myers were especially selected by the defendant company for this purpose, and in pursuance of their em-

Digitized by Google

ployment, and in the investigation of the said alleged robbery, the said C. L. Myers, together with N. W. Buxton, and two other persons to the plaintiff unknown, were employed by the said agents to make an assault with deadly weapons upon the plaintiff, and to seize him, throw him down, and by brute force deprive him of his personal liberty, with intent to compel the said plaintiff to confess and admit that he had perpetrated the robbery upon the defendant above referred to; that the said agents and employés of the defendant company did endeavor to kidnap the plaintiff and carry him to a secluded spot, where they were to hang him up by a rope furnished by the officers of the company for that purpose; and that the object of the company in committing this assault was to compel the plaintiff to admit and confess that he had perpetrated the robbery above mentioned. There is a second count in this declaration, alleging a conspiracy between the defendant corporation, by its officers, agents, and special representatives selected and chosen to investigate the robbery above referred to, and other officers, agents, and representatives of the defendant company unknown to plaintiff, to commit the assault for the purpose hereinbefore set forth. To this declaration the defendant company demurred, which demurrer being overruled by the trial court, error was assigned; and the first question to be determined here is whether or not the court below erred in rendering judgment on this demurrer, sustaining defendant in error's declaration.

The three questions raised by the demurrer are: (1) Does the declaration show, by relation of fact, any connection between the defendant company and the assault complained of? (2) Were the employés of the defendant corporation, in committing the assault, acting within the scope of their employment? (3) Is it necessary that in such an action against a corporation the names of the parties who actually committed the assault be given?

To the first question it is alleged by the declaration that the defendant company selected, and sent to the vicinage of the robbery, its special agents and representatives, W. T. Sherrett and C. L. Myers; that these agents were specially instructed to investigate the alleged robbery, and that the said agents, in pursuance of their employment, and in the investigation of the alleged robbery, acting within the scope of their employment, committed the trespass, to recover compensation for which this action was brought. The assault upon the defendant in error by these agents of the express company was committed to further the investigation of the robbery, and the wrong to defendant in error was committed by the agents of the defendant company, therefore, in carrying out the purposes of their employment. It is true that if the assault alleged had been committed willfully by the agents of the corporation, and in the performance of an act not within the scope of their employment, then these agents, who were merely the servants of the stockholders of the corporation, could not by their conduct render the corporation liable. In the case at bar certain persons were employed by the defendant company for the lawful and commendable purpose of ascertaining who was guilty of the robbery set forth in plaintiff's declaration. They were

Digitized by Google

clothed by the defendant company with the power to exercise their discretion as to the methods to be adopted in ferreting out the crime. Acting under this authority, clothed with this discretion, seeking to accomplish the ends for which they were employed, the agents of the defendant company did the wrong to plaintiff set forth in the declaration. It would not be contended otherwise than that a natural person, standing in the same relationship to the active wrongdoers in the case at bar as did the defendant company towards these agents, would be liable under the circumstances set forth. At common law a corporation could not be made a defendant to an action of battery, or suchlike personal injuries, for, in its corporate capacity, it could neither beat or be beaten; a corporation being, in the language of Sir Edward Coke, "invisible, and existing only in intendment and consideration of law," and wholly devoid of corporal body. But of recent years, with the growth of corporations, the multiplicity of interests owned by them, the diversity of business enterprises by them conducted, "judicial tribunals, with much wariness, and after close and exact scrutiny into their nature and constitution," ex necessitate have modified the strict rules of the common law in relation to corporate liability; and it is now declared to be the law that a corporation is liable civiliter for torts committed by its servants or agents, precisely as natural persons. Fotheringham v. Express Co., 36 Fed. 252; Railroad Co. v. Quigley, 21 How. 202; Salt Lake City v. Hollister, 118 U. S. 256, 6 Sup. Ct. 1055; Railway Co. v. Harris, 122 U. S. 597, 7 Sup. Ct. 1286. It is admittedly correct, as stated by counsel for the defendant company, that affirmative, willful action by the chief officers of the defendant company could not have made the company liable for the acts complained of in the declaration, for the corporation is liable only for the acts of its servants and employés within the scope of their duties. But in the case at bar the detection of the felon who robbed the company's office was, in the judgment of the company, very important to it. They employed their agents to detect the wrongdoer and bring him to justice. It was their duty to have selected for this purpose safe, careful, and prudent men,—representatives who would pursue this special business of the company in a legal, proper, and prudent way. This they did not do. They selected as agents men regardless of the rights of others; men who sought only the end for which they were employed, regardless of the means adopted to bring about this desired consummation. These agents committed the assault upon the plaintiff; and for this action by its agents, acting within the scope of their authority, the defendant company cannot escape responsibility.

Whether or not there was a subsequent ratification of the acts of these agents by the chief officers of the company is immaterial, for the reason that immediately upon the perpetration thereof the liability of the company to make satisfaction therefor attached. The acts of the agent were the acts of the company. If the perpetrators of this outrage had been successful, by means of the illegal and criminal methods employed against the defendant in error, in securing evidence against him that would lead to his conviction of the crime of robbery, or to the recovery by the company of the money of which it

Digitized by Google

was robbed, then the company would have been the recipient of the advantage gained by the wrongful acts of its agents; and this was the end sought by the express company. But these agents were unsuccessful in their efforts, and the company gained nothing thereby. "The question is not whether the particular act was authorized, but whether the act done grew out of the exercise of an authority which the master had conferred upon the servant." The bare reading of the allegations of the declaration demonstrates that the acts complained of grew out of the exercise of the authority given by the defendant company to these representatives.

Should the demurrer to the declaration have been sustained for the reason that the names of the persons committing the assault were not named therein? There is nothing in this contention, for the reason that the names of these persons are set forth. In the declaration the names of these persons are given as follows: "Four persons, to wit, C. L. Myers, N. W. Buxton, and two others to plaintiff unknown," employés of the company, committed the acts complained of. But even if no names were set forth in the said declaration, and it was alleged simply therein that certain agents and representatives of the defendant company, to the plaintiff unknown, had been guilty of this trespass, then the contention of plaintiff in error could not be sustained, for the reason that this deficiency would be only in a matter of proof, and not of allegation in the pleadings. It follows that there was no error made by the trial court in overruling the plaintiff in error's demurrer.

It is contended by the plaintiff in error (the defendant below) that the trial court erred in permitting the plaintiff below to testify as to the mental suffering occasioned him by reason of the assault. Bearing in mind that this action was one purely of tort, and that there was proof of substantial physical hurt and injury, there can be no question but what the plaintiff below was entitled to recover compensation for the mental pain and suffering that inevitably and necessarily resulted from the original injury. As was said by Mr. Justice Gray in Kennon v. Gilmer, 131 U. S. 28, 9 Sup. Ct. 697:

> "When the injury, whether caused by willfulness or by negligence, produces mental as well as bodily anguish and suffering, independently of any extraneous consideration or cause, it is impossible to exclude the mental suffering in estimating the extent of the personal injury for which compensation is to be awarded."

And in the case of McIntyre v. Giblin, 131 U. S. clxxiv., 9 Sup. Ct. 698, in an action brought by the defendant in error against the plaintiff in error to recover damages for negligent shooting, Chief Justice Waite expressly held that the plaintiff below was entitled to recover "a fair compensation for the physical and mental suffering caused by the injury."

Numerous assignments of error are based upon the admission of certain testimony which is alleged to be hearsay, and hence inadmissible. An examination of the record discloses that this so-called hearsay testimony was testimony of declarations and statements made by one who was proved to be an agent of the plaintiff in error while engaged in the transaction of the business of his principal, and hence

Digitized by Google

was properly admitted in evidence. That the parties who made these declarations alleged to be hearsay were the agents of the plaintiff in error, there can be no reasonable doubt. The actions and conduct of W. T. Sherrett were of such a character, so continuous, so well known and notorious, not only to the people in and around the place where the robbery had been effected, but among the other recognized and admitted agents of the plaintiff in error. He was recognized, received, and assisted as an agent of the express company, and for nearly three weeks was virtually in control of its office at Bartow for the purpose of his employment. During this time, by his directions, the books of the company were mutilated, that the plaintiff below might be decoyed from his bed at night to be assaulted as described. These and other acts of W. T. Sherrett were properly submitted to the jury to establish agency. A careful examination of the record discloses no substantial error on the part of the trial judge in the admission of this testimony.

In the declaration it was charged that Myers and Buxton, and two others to the plaintiff unknown, were procured to make the assault set forth therein. There is no testimony whatever in the record that in any wise connects Myers with the assault, directly or indirectly. Upon the conclusion of the testimony on behalf of the plaintiff below at the trial, the attorney for the plaintiff in error moved the court to instruct the jury to bring in a verdict for the defendant on the ground that the evidence disclosed a fatal variance between the allegations of the declaration and the proof in this respect, which motion was denied by the court; and the ruling of the court on this motion was assigned as error. There is no allegation, or even intimation, that the plaintiff in error had been misled in maintaining its defense upon the merits by this variance. There is nothing in the record, or on the face of the pleadings, in any wise showing that the express company was prejudiced thereby in any respect. This being the case, such variance was an immaterial one, and the court was correct in overruling the motion, and allowing defendant in error at that time to amend his declaration by striking out the name of Myers. It is only in case of a very gross or flagrant abuse of the discretion of the trial judge in allowing amendments to the pleadings that the same will be interfered with in the appellate court. A careful examination of the entire record discloses no substantial error against the appellant, and the judgment appealed from is therefore affirmed.

PARDEE, Circuit Judge, dissenting.

Digitized by Google

(94 Fed. 6.)

DULANEY v. SCUDDER et al.

(Circuit Court of Appeals, Fifth Circuit. March 28, 1899.)

No. 694.

1. EQUITY—JURISDICTION.
   A bill by the assignee of a contract with the government, who had completed the work thereunder, against the assignor, who was insolvent, and owed the assignee on account of the contract more than was due from the government, and who had filed objections with the government against payment to the assignee, to enjoin the assignor from collecting or receiving the money due for the work, and to settle, as between the parties, which had the better right to the fund, is within the cognizance of equity.
2. PARTIES.
   The government is not a necessary party to a suit by the assignee of a contract with it against the assignor to enjoin his collecting or receiving the money due under it, and to settle as between the parties the better right to the fund.
3. UNITED STATES—CLAIMS AGAINST—ASSIGNMENT.
   There is no claim against the United States, and therefore no assignment of it, within Rev. St. § 3477, declaring void all assignments of a claim against the United States, and all powers of attorney or other authorities for receiving payment of any such claim, unless made after issue of warrant for payment thereof, where one having a contract to do work for the United States, before doing any work under it, contracts with another to obtain advances with which to do the work, agreeing to make payment for the advances out of the moneys to be received from the government for the work, and executes a power of attorney to such other person, authorizing him to collect all money to become due on the contract with the government.[1]
4. SAME—CONTRACTS—ASSIGNMENT.
   Under Rev. St. § 3737, declaring that any assignment of a contract with the United States shall cause the annulment of the contract, so far as the United States are concerned, the government may treat it as annulled, or recognize the assignment.
5. EQUITY—MATTERS CONSIDERED.
   The court having taken jurisdiction of a suit by the assignee of a contract with the United States against the assignor to enjoin the assignor from collecting or receiving the money due under it, properly ascertains the amount due complainant from defendant, and renders a personal decree against him for that sum.

Appeal from the Circuit Court of the United States for the Southern District of Mississippi.

Murray F. Smith, for appellant.
S. H. King, for appellees.

Before PARDEE, McCORMICK, and SHELBY, Circuit Judges.

SHELBY, Circuit Judge. L. C. Dulaney, the appellant, made a written contract with an officer representing the United States, binding himself to construct certain levees. He agreed to furnish the labor and material, and to complete them in a manner satisfactory to the government. Dulaney was insolvent, and unable to carry out his

[1] As to assignment of government contracts, see subdivision 5 of note to Bank v. Lawrence, 22 C. C. A. 656.

Digitized by Google

agreement without assistance. On the 31st of March, 1894, to get the money and supplies to do the work, he made a contract with Scudder & Co. This contract is in writing, and by its terms Dulaney was to repay Scudder & Co. for the advances made to him, out of money he was to receive from the government for the work on the levees. With the contract, Dulaney executed a power of attorney to Scudder & Co. authorizing them to collect and receipt for all money to become due on Dulaney's contract with the government. The agreement referred to the power of attorney executed at the same time in these words: "In case the power of attorney executed by the said Dulaney shall not be satisfactory to the United States authorities, he agrees to execute such other or others as may be necessary to conform to the requirements of said authorities." The power of attorney was submitted to the government, and accepted as satisfactory, after requiring a change in the acknowledgment. The estimates, when due, while Dulaney had charge of the work, were paid to Scudder & Co. under this contract and power of attorney. In May, 1895, it became known to Scudder & Co. that Dulaney had failed to comply with the terms of his contract with the government, and that the government was about to annul the contract. Scudder & Co. had already made large advances to Dulaney. To avoid the loss of advances already made, Scudder & Co., on the 27th day of May, 1895, made another agreement with Dulaney. By this agreement Dulaney transferred certain personal property to Scudder & Co., and also assigned to them "all his rights and interest" in the contract which he had made with the government; Scudder & Co. agreeing to finish the work which Dulaney had, in the first instance, agreed to do. Scudder & Co. proceeded to finish the work, taking entire charge of it. As the work progressed, payments were made to them upon estimates made pursuant to the original contract between Dulaney and the government. When the work was finished, it was accepted by the government, and the estimate for the final payment was made; but, before it could be paid to Scudder & Co., Dulaney gave the government written notice that he had revoked his power of attorney, and objected to this final payment being made to Scudder & Co. The amount then due from the government on the work was about $7,715, and Dulaney was, on account of these transactions, indebted to Scudder & Co. in a much larger sum. Dulaney continues insolvent, and the substantial subject of this litigation is the right to the money due for the work, and now held by the government. On the 27th of May, 1896, Scudder & Co. filed their bill in chancery against Dulaney, alleging the facts that we have briefly stated, and praying for general relief, and specially that Dulaney be perpetually enjoined from collecting or receiving the money due for this work. The circuit court overruled a demurrer to the bill, and on the final hearing enjoined Dulaney as prayed for; and also rendered a decree against Dulaney for the amount found to be due Scudder & Co. The cause is brought here by appeal, and it is urged that there is no equity in the bill, that the United States was a necessary party to the suit, and that sections 3477 and 3737 of the Revised Statutes of the United States make the dealings between the parties illegal, and that, therefore, the contracts between Dulaney and Scudder & Co. are against public policy, and void.

Digitized by Google

1. It is not necessary to examine the questions whether the bill contains equity as a bill for an accounting or as one to prevent a multiplicity of suits. Scudder & Co. had earned, and are certainly the equitable owners of, the fund in controversy, which is withheld by the government. The contract under which the work was done was originally with Dulaney. He is now claiming the fund, and has given notice to the government of the revocation of the power of attorney under which it was to have been paid to Scudder & Co. Dulaney is insolvent. Unless the government is bound by its dealings with Scudder & Co.,—a question not necessary to be decided,—it has the right to either recognize or reject the power of attorney of Dulaney and his contract with Scudder & Co. If Dulaney should receive the money, Scudder & Co. would be without remedy. The jurisdiction of equity for the protection of contract rights is not limited to the original parties to the agreement, but is often exercised in favor of their assignees. Under the circumstances of this case, the necessity of protecting the assignee by the writ of injunction is sufficient of itself to give equity jurisdiction. 2 High, Inj. (3d Ed.) § 1113. In Milnor v. Metz, 16 Pet. 221, the fund in controversy was in the treasury. The secretary refused to recognize the claim of either party, and waited for the conflicting claims to be adjusted by the courts. Metz filed his bill enjoining Milnor from receiving the money, and had a decree of perpetual injunction, which was affirmed by the supreme court. The case of Phelps v. McDonald, 99 U. S. 298–307, was a contest in equity as to the ownership of money which was not within the jurisdiction of the court. The court said, "Whether the money be here or abroad, the assignee is entitled to have the question finally settled whether he or McDonald has the better right." The allegations of the bill make a case within the jurisdiction of equity to enjoin Dulaney, and to settle, as between the parties, which has the better right to the fund in controversy.

2. In this suit it was not necessary that the United States be made a party defendant. The United States cannot be sued except by their consent. The position could not be sustained that the complainants would be deprived of their equitable remedy by injunction against Dulaney, because the United States did not consent to be sued. In the case of Milnor v. Metz, supra, the United States was not made a party defendant; and in Phelps v. McDonald, supra, the court granted relief by a decree in personam, although the property involved was not in its territorial jurisdiction. The purpose of this suit was to settle the controversy between the parties to it, and the decree rendered is not binding on the United States, but would protect the government in disregarding the notice of Dulaney that he had revoked the power of attorney given to Scudder & Co.

3. There are two sections of the Revised Statutes that bear upon the defenses made, and they should be examined together. Section 3477 is as follows:

"All transfers and assignments made of any claim upon the United States, or of any part or share thereof, or interest therein, whether absolute or conditional, and whatever may be the consideration therefor, and all powers of attorney, orders, or other authorities for receiving payment of any such claim, or of any part or share thereof, shall be absolutely null and void, unless they

Digitized by Google

are freely made and executed in the presence of at least two attesting witnesses, after the allowance of such a claim, the ascertainment of the amount due and the issuing of a warrant for the payment thereof. * * *"

This section, it will be observed, relates to the transfers of any "claim" against the United States.

Section 3737 relates to the transfer of "contracts" and is as follows:

"No contract or order, or any interest therein, shall be transferred by the party to whom such contract or order is given to any other party, and any such transfer shall cause the annulment of the contract or order transferred, so far as the United States are concerned. All rights of action, however, for any breach of such contract by the contracting parties, are reserved to the United States."

These statutes have been often the subject of construction by the courts, and it has been uniformly held that their purpose is the protection of the United States. In Hobbs v. McLean, 117 U. S. 576, 6 Sup. Ct. 874, the court said:

"The sections under consideration were passed for the protection of the government. They were passed in order that the government might not be harassed by multiplying the number of persons with whom it had to deal, and might always know with whom it was dealing until the contract was completed, and a settlement made."

In Goodman v. Niblack, 102 U. S. 560, Mr. Justice Miller, speaking for the court, after stating the mischiefs these statutes were intended to prevent, said:

"Both these considerations, as well as a careful examination of the statute, leave no doubt that its sole purpose was to protect the government, and not the parties to the assignment."

There are many cases and opinions to the same effect. Bailey v. U. S., 109 U. S. 432, 3 Sup. Ct. 272; 15 Op. Attys. Gen. 245; 16 Op. Attys. Gen. 278. The intention of congress in enacting these statutes, and their purpose, should be kept in view while construing them. The record shows that Dulaney was insolvent when he made the contract with the government, and that he contracted with Scudder & Co. to obtain the advances before he had performed any work on his contract. When he made the contract of March 31, 1894, and executed the power of attorney, he had no claim against the government. He had done no work. In Hobbs v. McLean, supra, the court said:

"When those articles were signed, there was no claim against the government to be transferred. * * * What is a claim against the United States is well understood. It is a right to demand money from the United States. Peck acquired no claim in any sense until after he had made and performed wholly, or in part, his contract with the United States. Section 3477, Rev. St., it is clear, only refers to claims against the United States which can be presented by the claimant to some department or officer of the United States for payment, or may be prosecuted in the court of claims."

The arrangement, therefore, made by Dulaney with Scudder & Co. to obtain the means to carry out the former's contract with the government, was not the transfer of a claim within the meaning of section 3477, and does not violate the letter or spirit of that section. This agreement and power of attorney of March 31, 1894, are not made null and void, as between the parties to it, by the statute. On the 27th of May, 1895, another contract was made between Dulaney and Scudder & Co. By the terms of this contract, Dulaney transferred his

Digitized by Google

interest in his government contract to Scudder & Co. The language used is:

"The said L. C. Dulaney does hereby transfer, assign, and set over to said parties of the second part (Scudder & Co.) his said contract, and all his rights and interests thereunder; the said parties of the second part agreeing and obligating themselves to complete said levee work according to the conditions of the said contract and requirements of the U. S. government."

Under this transfer, Scudder & Co. completed the work, received payments from the government on estimates, and now claim to own the amount due from the government for the work. This last agreement is the transfer of a contract, within the meaning of section 3737. Such transfers are not, by that section, declared null and void. The statute causes the "annulment of the contract * * * so transferred so far as the United States are concerned." It is intended, as we have shown, for the protection of the United States. The government was free to treat it as annulled, or to recognize the assignment. In Burck v. Taylor, 152 U. S. 648, 14 Sup. Ct. 701, commenting on this statute, the court said:

"The express declaration that, so far as the United States are concerned, a transfer shall work an annulment of the contract, carries, by clear implication, the declaration that it shall have no such effect as between the contractor and his transferee. In other words, as to them, the transfer is like any other transfer of property, and controlled by the same rules. Its invalidity is only so far as the government is concerned, and it alone can raise any question of the violation of the statute. The government, in effect, by this section, said to every contractor, 'You may deal with your contract as you please, and as you may deal with any other property belonging to you, but, so far as we are concerned, you, and you only, will be recognized either in the execution of the contract or in the payment of the consideration.' "

The court having taken jurisdiction of the cause to settle this controversy as to the ownership of the fund, and to enjoin Dulaney from receiving it, it is a familiar principle that it should settle the whole matter. It was right, therefore, to ascertain the amount due the complainant from the defendant, and to render a personal decree for such sum. The decree of the circuit court is affirmed.

(94 Fed. 30.)

LAMSON et al. v. BEARD. C. B. CONGDON & CO. v. SAME. PHELPS et al. v. SAME.

(Circuit Court of Appeals, Seventh Circuit. May 19, 1899.)

Nos. 526, 555, and 561.

1. REVIEW—JUDGMENT—SUFFICIENCY OF FINDINGS.
   In determining whether a judgment is supported by a special finding, the sufficiency of the facts found is the sole question to be determined, and hence the admission of evidence of immaterial facts is not error.
2. BANKS AND BANKING — AUTHORITY OF PRESIDENT — MISAPPROPRIATION OF FUNDS.
   If the directors of a bank, trusting the president's integrity or individual responsibility, authorized him to use drafts drawn on its funds for private purposes, whether paid for at the time or not, any loss resulting from the misuse of such authority would fall on the bank, and not on a third per-

Digitized by Google

son, who had taken the drafts for value and in good faith, which in such case would be determined by the established rules governing the transfer of negotiable paper.

3. BILLS AND NOTES — PAYMENT BY BANK DRAFT—INQUIRY BY DRAWEE—NECESSITY.
A creditor, receiving a bank draft drawn to his order from his debtor in payment of the debt, is entitled to accept the draft without inquiry, not because of a presumption that the debtor had paid for the draft, but because it was drawn by the authorized officer of the bank in the usual course of business, acting without apparent or known interest in the transaction.

4. SAME—BONA FIDE PURCHASER—EQUITIES.
The receiver of such draft, though apparently an original party, as against the drawer is in effect an indorsee, and hence is only affected by equities of which he had notice before accepting it.

5. BANKS AND BANKING — DRAFTS BY PRESIDENT FOR PERSONAL USE — AUTHORITY TO DRAW—INQUIRY BY DRAWEE.
Where the president of a bank, as such, drew drafts on the bank's funds on deposit with its correspondents, payable to the order of certain brokers, for margins on transactions in futures carried for him personally, such payees are not bona fide holders of such drafts, but are put on inquiry as to the president's authority to draw the same on the bank's funds for his personal use, which inquiry they should have made from the directors of the bank; but they were under no obligation to undertake an examination of the bank's books to ascertain whether the president had reimbursed the bank.

6. SAME.
In the absence of special authority, conferred by the directors of a bank by resolution, acquiescence, or implied assent, the president of a bank has no authority to draw drafts on its funds in payment of personal debts.

7. SAME—RECOVERY OF MONEY—FINDINGS—CONSTRUCTION.
In an action by a bank to recover money fraudulently paid out by its president by means of drafts, a finding that the president was not a depositor, and that such wrongful appropriation constituted embezzlement, was not nullified by the fact that it was also found that the entries on the bank's books tended to show that the bank was paid for the drafts so drawn.

8. SAME.
Where a transaction between the president of a bank and defendants, in which the president paid defendants money belonging to the bank, which he wrongfully appropriated, was concealed from the bank, and the mere statement of the facts to the directors would have disclosed the fraud, defendants are liable to the bank for the money so received.

9. SAME—FRAUDULENT WITHDRAWALS BY PRESIDENT—NOTICE.
Possession of books by a bank, containing entries of drafts fraudulently drawn by the president in personal brokerage transactions, is not notice thereof to the bank, where the books were under the sole control of the president, and kept in such a manner as to conceal his defalcations.

10. SAME.
Knowledge by the president of a bank of his misappropriation of its funds in personal transactions is not notice to the bank.

11. SAME—COURSE OF DEALING—ESTOPPEL.
Where the president of a bank wrongfully appropriated the bank's funds to his personal use by means of drafts, which he so entered on the bank's books as to conceal their fraudulent character, the bank is not estopped by the president's course of dealing from denying his authority to draw drafts for such purpose.

12. SAME—TRIAL—FINDINGS—EFFECT.
A finding that money of a bank, appropriated by the president to his personal use by means of drafts, was wrongfully taken by him, is equivalent to a finding that he had no authority to draw and use the drafts.

Digitized by Google

13. SAME—DEFENSE—NEGLIGENCE.
In an action by a bank to recover the proceeds of drafts wrongfully drawn by its president and used for his personal benefit, the defense that he was permitted to draw them through the culpable negligence of the directors is unavailing, where there was no finding of such negligence, or that defendants were influenced thereby to accept the drafts, of which they had notice the president was making improper use.

14. BILLS AND NOTES—BANK DRAFTS—WRONGFUL ISSUANCE—ACCEPTANCE BY PAYEES—EFFECT.
Where the president of a bank, as such, drew drafts on its funds, in favor of certain brokers as payees, for margins on brokerage transactions, such drafts are neither commercial paper, nor contracts, until accepted by the payees; and by acceptance the payees become parties to their original execution, and hence are put on inquiry whether the president exceeded his authority in drawing them, and, if so, such payees are liable to the bank for their proceeds.

15. TRIAL—SPECIAL INSTRUCTIONS.
It was not error for the court to refuse a special instruction on an issue not pleaded, and impliedly excluded from the consideration of the jury.

In Error to the Circuit Court of the United States for the Northern Division of the Northern District of Illinois.

These are actions of assumpsit, brought by Robert R. Beard, as receiver of the First National Bank of Pella, Iowa, to recover of the respective plaintiffs in error, who are commission merchants at Chicago, the proceeds of drafts of the bank, drawn in their favor and delivered to them by E. R. Cassatt, then president of the bank, in discharge of individual liabilities incurred in transactions conducted by them for him on the board of trade at Chicago.

The plaintiffs in error in the first case are co-partners under the name of Lamson Bros. & Co.; in the third case, under the name of Milmine, Bodman & Co.; and in the second case C. B. Congdon & Co. is the name of a corporation. The declaration in each case contains the customary common counts, and also special counts, to which the drafts therein sued upon are made exhibits. Plea in each case, non assumpsit; and in the first case a trial by jury. The errors assigned in that case have reference to the giving and refusing of instructions. The evidence is in the record, and is without substantial conflict. The drafts, of which there were ten, were all drawn upon a lithographed or printed form, and, excepting dates and amounts, are like the first, which reads as follows:

"First National Bank.

"Pella, June 27, 1892.

"Pay to the order of Lamson Bros. & Co. $400, four hundred dollars.

"E. R. Cassatt, Pt.

"To National Bank of Illinois. Cashier."

The word "Cashier" is in print, and the letters "Pt.," opposite the name of Cassatt, were written by him to indicate his office as president of the bank. He sent the drafts by mail to Lamson Bros. & Co., in response to their demands, in order to maintain his margins, and in each instance they acknowledged receipt by a letter addressed to Cassatt individually. In their letter of December 20, 1893, they say, "Your a/c has credit for $200, received from First National Bank of your city," and in that of January 22, 1894, they say: "We received today from the First National Bank of your city their favor of the 20th instant, containing draft for $400, which we have credited to your account."

Under the court's charge, which upon the main question in the case followed the opinion of Judge Wallace in Anderson v. Kissam, 35 Fed. 699, the jury returned a verdict, upon which judgment was entered in favor of the plaintiff for the sum of $3,588, of which it is conceded the sum of $688 was for interest. In support of the court's charge there have been cited (in addition to Ander-

Digitized by Google

son v. Kissam, supra) Chrystie v. Foster, 9 C. C. A. 606, 61 Fed. 551; Moores v. Bank, 15 Fed. 141; Id., 111 U. S. 156, 4 Sup. Ct. 345; Claflin v. Bank, 25 N. Y. 293; Gerard v. McCormick, 29 N. E. 115, 130 N. Y. 261; Wilson v. Railway Co. (N. Y. App.) 24 N. E. 384; Shaw v. Spencer, 100 Mass. 384; Bank v. Wagner (Ky.) 20 S. W. 535. Per contra, the plaintiffs in error have cited Goshen Nat. Bank v. State, 141 N. Y. 379, 36 N. E. 316; Bank of New York Nat. Banking Ass'n v. American Dock & Trust Co., 143 N. Y. 564, 38 N. E. 713; Hanover Nat. Bank v. Same, 148 N. Y. 612, 43 N. E. 72; Kissam v. Anderson, 145 U. S. 435, 12 Sup. Ct. 960. This case was argued at the October session, 1898, Judge Showalter with the other circuit judges composing the court. In each of the other cases a trial by jury was waived by written stipulation, and the court made a special finding of facts, based in the main upon an agreed statement of the parties, and gave judgment for the plaintiff.

The findings in No. 555 are as follows:

"First. The plaintiff was before and at the time of the commencement of this suit, and is now, the receiver, duly appointed by the comptroller of the currency, of the First National Bank of Pella. The plaintiff was at the time of the commencement of this suit, and is, a citizen of the state of Iowa.

"Second. The defendant C. B. Congdon & Co. is a corporation organized under the laws of the state of Illinois, having its principal place of business in Chicago, in the Northern division of the Northern district of said state. Said corporation is a resident and citizen of the state of Illinois, and of the Northern division of the Northern district thereof, and was so organized and incorporated, and was such resident and citizen, at the time of the commencement of this suit.

"Third. The said First National Bank of Pella is situated at Pella, a town of about 3,000 inhabitants, in the midst of a farming community, and was organized in 1871, under the banking laws of the United States, with a capital stock of $50,000. E. R. Cassatt was the principal person engaged in its organization, and after the year 1883, together with his relatives, owned a majority of the stock, all of which was controlled by Cassatt. From the time of the organization of the bank to its failure Cassatt was president, and the principal executive officer of the bank, and enjoyed in a high degree the confidence of its stockholders and of the people of Pella and of the surrounding country. Subsequent to 1881 the management of the bank was entirely under the control of E. R. Cassatt. The board of directors performed their duties largely in a perfunctory manner, and their knowledge as to the affairs of the bank was derived almost exclusively from the statements made to them by Cassatt. Cassatt dictated the persons to whom loans should be made, and had the entire discretion as to the acceptance of all bills receivable which became part of the assets of the bank. The method by which the affairs of the bank were conducted, the duties which the clerks performed, the manner of selling exchange, and the other executive methods of the bank were devised by said Cassatt, and carried on under his directions, without interference from the directors. The board of directors reposed implicit confidence in Cassatt, and accepted his statements as true in regard to all the affairs of the bank, and made no examination of the bills receivable to ascertain whether they were spurious or not. Cassatt had charge of the bills receivable of the bank and of the cash chest. Cassatt was accustomed, from the organization of the bank down to the time of its failure, to draw drafts on the funds of said bank on deposit in other banks, signing such drafts in the name of himself as president. The affairs of the bank were examined twice a year by the examiner appointed by the comptroller of the currency of the United States. At the time of such examinations Cassatt was accustomed to exhibit to the examiner the bills receivable and the cash on hand, and then return them to the safe. At such times the proper amount of cash was on hand and such bills receivable as the books of the bank showed to be on hand. The balance of the stock of the bank, outside of Cassatt's holdings, were held in small amounts, the average being about $2,000 of stock (at its par value).

"Fourth. The said First National Bank of Pella went into the hands of a receiver June 25, 1895. At the time of its failure it was for the first time ascertained by its stockholders, and by the other officers, that said Cassatt was a

Digitized by Google

defaulter to the bank in the sum of about $65,000. Such sum had been taken by Cassatt, from time to time, from the moneys of the bank, and had been concealed by means of forged, spurious, and other fictitious notes; other evidences of loans having been put into the bank by Cassatt. The forged and fictitious notes were so adroitly executed that there was nothing that would suggest to the ordinary observer that the notes were not genuine, as they purported to be. The said Cassatt has since that time been duly indicted, tried, and convicted for the embezzlement of said $65,000, and is now serving his sentence on account of such conviction.

"Fifth. The said Cassatt began to have business dealings with C. B. Congdon & Co., a firm consisting of C. B. Congdon and A. C. Davis, commission merchants on the Board of Trade in the city of Chicago, in 1894, continuing to have such transactions down to and including a portion of September, 1894. On or about September 24, 1894, the defendant corporation of C. B. Congdon & Co. was duly organized under the laws of the state of Illinois and authorized to begin business. On said September 29, 1894, said corporation duly purchased the good will and property of the said firm of C. B. Congdon & Co. and of the firm of A. C. Davis & Co., said A. C. Davis being a member of both firms. The stockholders of said corporation were, and at the time of said transaction continued to be, and still are, the same men who constituted the firm of C. B. Congdon & Co. and the firm of A. C. Davis & Co. The officers of said corporation, at the time of its organization and at the time the drafts were made in the suit here, were C. B. Congdon, president; A. C. Davis, vice president; William S. Warren, secretary; Charles H. Hulburd, treasurer,—the said C. B. Congdon being the same C. B. Congdon who belonged to the previous firm of C. B. Congdon & Co., and the said A. C. Davis being the same A. C. Davis who belonged to the firm of C. B. Congdon & Co. The directors of said corporation were at the beginning, and have ever since continued to be, C. B. Congdon, A. C. Davis, C. H. Hulburd, William S. Warren, and E. A. Lancaster. From the time said corporation of C. B. Congdon & Co. was organized the said Cassatt continued his dealings, formerly had with C. B. Congdon & Co., with the said corporation. The said dealings with the said corporation and its predecessor, C. B. Congdon & Co., were substantially as follows: The said Cassatt would, either personally or by wire, direct the said corporation or firm to purchase or sell certain futures in either wheat, oats, or provisions, which said direction would be executed by the corporation on the Chicago Board of Trade by buying of or selling to some other broker on such board the futures stipulated. Such purchases or sales would thereupon be carried by said corporation or firm in the name of and for the benefit of said Cassatt until another order was received by Cassatt closing out the same, either by purchase or sale, as the case might be. Under the rules of the Board of Trade the corporation or firm would have been obliged to have delivered, in case of sales, or accepted, in case of purchases, from the brokers with whom they had transactions, the cereals or provisions in question when the deals matured, and the said Cassatt would have been obliged to have taken or delivered to the corporation or firm the cereals or provisions called for in such deals at the time they would have matured. As a matter of fact, however, none of the sales made by the corporation or firm on account of Cassatt ever resulted in the delivery of any grain or provisions, and none of any of the purchases made on his account ever resulted in obtaining, or the acceptance of, any grain or provisions. The deals were, in nearly every instance, closed before the future to which they related had arrived, and without the passing or intention to pass of any actual grain or provisions. All the transactions of Cassatt with the said corporation or firm were intended by him to be purely speculative transactions in futures on the Board of Trade, and were so understood by the said corporation or firm, and none of the said transactions contemplated the purchase or sale of grain or provisions with any other purpose than the subsequent disposal of the same without the actual delivery or acceptance of the grain or provisions involved. The purchases and sales were numerous, and represented, in the aggregate, a large amount of dealing. The defendants and the firm were protected from losses by margins put up from time to time with them by said Cassatt for that purpose. The general course of said speculation was unfavorable to Cassatt. He occasionally had some

Digitized by Google

profits, but more frequently suffered losses. The whole course of the transactions would have disclosed to an ordinary observer, fully informed of the facts, that Cassatt was gradually losing, and that some funds owned or controlled by him must have been gradually eaten into by the losses from time to time incurred and the margins put up. The defendants themselves must have known this prior to and at the time they received the drafts sued upon, unless they willingly suffered themselves to be deceived.

"Sixth. The said Cassatt, in order to carry on his deal with the said firm and defendants, kept two accounts in the said First National Bank of Pella, one in his own name, and the other in the name of E. R. Cassatt & Co. During the period of said deals Cassatt remitted to the said firm, on account of the margins aforesaid, from time to time, drafts similar to the drafts sued on in these cases, including the drafts sued upon; that is to say, the drafts signed by the First National Bank of Pella, by E. R. Cassatt, president, drawn upon the National Bank of Illinois, and payable to the firm. These drafts drawn upon the firm of C. B. Congdon & Co. bore the dates, and were for the amounts, as follows: 1894: January 10th, $400; January 24th, $200; February 10th, $500; February 16th, $600; April 25th, $500; May 12th, $500; May 15th, $500; May 17th, $1,100; July 18th, $600; July 20th, $400. Also, there were sent to the defendant the corporation of C. B. Congdon & Co. drafts as follows: 1894: October 3d, $2,000. 1895: January 23d, $2,000. Said drafts, having been received by the said firm of C. B. Congdon & Co. and the said corporation of C. B. Congdon & Co., and credited to the said Cassatt on their books, respectively, were indorsed on the back by the said firm of C. B. Congdon & Co. and the said corporation of C. B. Congdon & Co., respectively, and deposited to the credit of their account in their bank of deposit in Chicago, the Corn Exchange Bank, by which bank they were passed to the National Bank of Illinois, and charged by said last-named bank to the First National Bank of Pella. Such drafts were, at a date subsequent to their issue, duly credited to said National Bank of Illinois, and charged to some account on the books of said Pella Bank having a credit balance appearing upon said books of sufficient amount to pay or offset such charges, except, however, in so far as the facts stipulated in this paragraph may be modified by the following statement, to wit, that at the time of the failure of the Pella Bank the books of said National Bank of Illinois showed that drafts to the amount of $3,000 had been drawn by said Pella Bank upon said National Bank of Illinois and not credited to it upon the books of said Pella Bank.

"Seventh. None of said drafts were used or intended to be used to pay off any debt or obligation of said bank, but all were used to supply the margins in the private transactions of the said Cassatt with the said firm of C. B. Congdon & Co. and said corporation of C. B. Congdon & Co., as aforesaid. Said transactions were all kept secret from the bank by said Cassatt.

"Eighth. There is no evidence from either side, other than the foregoing, tending to show that the said Cassatt was or was not a man of means, independently of his holdings in the said First National Bank of Pella. Both the firm of C. B. Congdon & Co. and the corporation of C. B. Congdon & Co. knew that Cassatt was president of the bank, and had access to its funds, but made no inquiry as to whether said Cassatt had means, independently of his holdings in said bank, and made no inquiry of said Cassatt, the other officers of the bank, or any one else likely to know, whether said Cassatt was using his own means in the speculative transactions aforesaid, and no inquiry looking in that direction.

"Ninth. The court finds that the avails of the drafts sued upon in this case, through the means already described, were taken purposely by the said Cassatt, without authority of law, but as an act of theft and embezzlement from the funds of said bank, and that the defendants, in receiving the avails of said drafts, were in fact receiving the moneys stolen by said Cassatt from said bank. The court further finds that reasonable and prudent men, having no selfish interests to subserve, would have been led, by the facts in possession of the firm of C. B. Congdon & Co. and of the defendant, to suspect that said Cassatt might be unlawfully using the funds of said bank to supply the margins transmitted to the firm of C. B. Congdon & Co. and the corporation of C. B. Congdon & Co., respectively.

Digitized by Google

"Wherefore, the court finds the issues for the plaintiff and against the defendants, and assesses the plaintiff's damage at the sum of $2,323.61, of which $2,000 is principal and $323.61 interest. P. S. Grosscup, Judge."

In No. 561 the findings, with a change of the names of the defendants, are the same, with the following exceptions:

The fifth commences with this statement: "Fifth. The said Cassatt began to have business dealings with the defendants, commission merchants on the Board of Trade, in the city of Chicago, in 1884, continuing to have such transactions down to and including a portion of the year 1894,"—and also contains the following: "The money which was sent to Milmine, Bodman & Co. to pay the losses aforesaid was in turn paid out by Milmine, Bodman & Co., for the purpose of discharging the contracts made in behalf of Cassatt by them, upon which the losses occurred, and no profit resulted to Milmine, Bodman & Co. by reason of any of the dealings with Cassatt, except the commissions which they earned as brokers in negotiating the transactions for him."

The sixth, after the first sentence, proceeds as follows: "During the period of said deals, Cassatt remitted to the defendants, on account of margins aforesaid, from time to time prior to the drafts sued on in this case, 27 drafts, each of which was exactly similar to the drafts sued on in this case; that is to say, each was signed, 'First National Bank of Pella, by E. R. Cassatt, President.' All of these drafts were collected by the defendants in the same way as the drafts in the suit. The earliest of the series of drafts, prior to the drafts in suit, was August 21, 1884, and the latest was April 6, 1891. Of these drafts, there were 5 in 1884, 8 in 1885, 6 in 1886, 2 in 1887, 1 in 1888, 1 in 1890, and 2 in 1891, and were for the amounts and bore the dates as follows: 1884: August 21st, $500; October 11th, $300; November 19th, $300; December 1st, $500; December 9th, $300. 1885: January 5th, $200; February 19th, $250; March 25th, $500; April 27th, $500; July 27th, $425; October 5th, $300; October 10th, $1,500; October 15th, $1,000. 1886: April 12th, $1,000; April 17th, $1,000; September 11th, $300; September 25th, $300; October 11th, $300. 1887: February 19th, $300; July 8th, $300. 1888: December 3d, $1,000. 1889: March 18th, $800; April 13th, $500. 1890: February 13th, $500. 1891: January 6th, $500; April 6th, $1,000. Each of said drafts was charged by the National Bank of Illinois to the First National Bank of Pella, and monthly statements were sent by the National Bank of Illinois to the First National Bank of Pella, which were checked up by the clerks in the latter bank, but during the two years immediately preceding the failure the checking was done by Cassatt himself. Most of the drafts sent by E. R. Cassatt, as aforesaid, both those prior to the ones in suit, as well as the drafts sued upon in this case, except as hereinafter noted, were charged upon the books of the First National Bank of Pella, either to the account of E. R. Cassatt, or to the account of E. R. Cassatt & Co., which account, at the time of such charging, had an apparent credit balance sufficient to pay or offset the charge so made against it. Such of said drafts as were not charged to E. R. Cassatt, or to E. R. Cassatt & Co., were charged to some other account upon the books of said bank, which account, at the time of said charges, had an apparent credit balance sufficient to pay or offset the charges so made against it. Said drafts were all signed by E. R. Cassatt as president. The drafts sued on in this case were all drawn upon the National Bank of Illinois, payable to Milmine, Bodman & Co., and signed 'First National Bank of Pella, by E. R. Cassatt, President,' and were of dates and amounts as follows: 1891: August 20th, $1,400; August 31st, $800; September 19th, $500. 1892: June 13th, $2,000; August 27th, $1,000; September 5th, $1,000; October 22d, $1,000; October 28th, $1,000. 1893: January 30th, $1,000; February 14th, $600; February 18th, $1,500; March 13th, $600; June 21st, $2,500; November 23d, $300; December 21st, $500. 1894: January 24th, $300; February 10th, $500; February 12th, $600."

And the seventh contains the following additional statement: "The telegraphic correspondence between said Cassatt and the defendants was carried on in cipher. On one occasion the defendants failed to observe this cipher, and on a protest from said Cassatt promised that such oversight should not occur again. It is not unusual, however, for Board of Trade commission men

Digitized by Google

to communicate with their customers in cipher. The cipher used in this case was the so-called 'Robinson Cipher.' Nearly every dealer in the country has a copy of this. The telegrams were neither signed nor addressed in cipher, but were addressed and signed by the correct names of the respective parties."

In No. 555 the following propositions and the authorities cited are relied upon:

(1) "There was nothing in the form of the draft sued on to create a suspicion that Cassatt was using the funds of the bank in the payment of his individual indebtedness. Goshen Nat. Bank v. State, 141 N. Y. 179, 36 N. E. 316; Claflin v. Bank, 25 N. Y. 297; Bank of New York Nat. Banking Ass'n v. American Dock & Trust Co., 143 N. Y. 564, 38 N. E. 713; Hule v. Allen (Sup.) 34 N. Y. Supp. 577; Dike v. Drexel (Sup.) 42 N. Y. Supp. 985; Goodman v. Simonds, 20 How. 364; Bank of Edgefield v. Farmers' Co-op. Mfg. Co., 2 C. C. A. 637, 52 Fed. 98–103; Bank v. Holm, 19 C. C. A. 94, 71 Fed. 489; Kaiser v. Bank, 24 C. C. A. 88, 78 Fed. 281; Anderson v. Kissam, 35 Fed. 699; Kissam v. Anderson, 145 U. S. 435, 12 Sup. Ct. 960."

(2) "The directors of the Pella Bank were guilty of culpable negligence, which far outweighed any slight negligence of defendant."

(3) "The course of dealing between the bank and the defendant, and its predecessor firm of the same name, created a presumption, upon which defendant could rely, that the draft sued on was properly obtained by Cassatt, and that the defendant was entitled to receive its avails in payment of a debt due from Cassatt. There was implied authority for his act. Martin v. Webb, 110 U. S. 7, 3 Sup. Ct. 428; Hanover Nat. Bank v. American Dock & Trust Co., 148 N. Y. 612, 43 N. E. 72."

(4) "Cassatt paid for the draft by the use of the credits the bank had given him. He defrauded the bank in his obtention of the credits, but that was another transaction. So long as the credits subsisted, they could, as between the bank and the defendant, be used as they were used. Wilson v. Railway Co. (N. Y. App.) 24 N. E. 384."

(5) "Assuming, arguendo, that the form of the draft was such as ought to have created suspicion that Cassatt might be improperly using the funds of the bank in payment of his individual debt, and that the defendant was charged with the duty of inquiry, and made none, it is only chargeable with a knowledge of such facts as it would have learned by the exercise of ordinary diligence. Birdsall v. Russell, 29 N. Y. 220; Woolen Mills v. Sibert, 81 Ala. 140, 1 South. 773; Knapp v. Bailey (Me.) 9 Atl. 122."

In No. 561 the following:

(1) "The defendants were under no duty to inquire into the facts of transactions anterior to, and entirely separate and distinct from, the transactions to which they were parties."

(2) "The court erred in entering judgment against the defendants, when the findings showed that Cassatt had paid the bank for every one of the drafts. Goshen Nat. Bank v. State, 141 N. Y. 379, 36 N. E. 316; Wilson v. Railroad Co., 120 N. Y. 145, 24 N. E. 384; Hanover Nat. Bank v. American Dock & Trust Co., 148 N. Y. 612, 43 N. E. 72; Cowing v. Altman, 71 N. Y. 435; Railway Co. v. Sprague, 103 U. S. 756."

(3) "The fact that the bank had allowed Cassatt, for a period of seven years prior to the dates of the drafts in suit, to draw drafts in a manner exactly like the manner in which he drew the drafts sued on, established a course of dealing which estops the bank to deny that Cassatt had a right to act according to this established course. Bronson's Ex'r v. Chappell, 12 Wall. 681; Martin v. Webb, 110 U. S. 7, 3 Sup. Ct. 428; Merchants' Bank v. State Bank, 10 Wall. 604; Hooe v. Oxley, 1 Wash. (Va.) 19; McDonnell v. Bank, 20 Ala. 313; Martin v. Manufacturing Co., 9 N. H. 51; Weaver v. Ogletree, 39 Ga. 586; Railroad Co. v. Schuyler, 34 N. Y. 30; Hanover Nat. Bank v. American Dock & Trust Co., 148 N. Y. 612, 43 N. E. 72."

(4) "One who receives a bank draft, fair on its face, signed by the officer duly authorized to sign drafts, may take it as currency, even though he receives it from the officer who signs it, and in payment of the latter's debt. Goshen Nat. Bank v. State, 141 N. Y. 379, 36 N. E. 316; Goodman v. Simonds, 20

Digitized by Google

How. 343; Railroad Co. v. Schuyler, 34 N. Y. 30; Bank of Edgefield v. Farmers' Co-operative Mfg. Co., 2 C. C. A. 637, 52 Fed. 98; Swift v. Smith, 102 U. S. 442."

(5) "Even if Milmine & Co. had inquired, they could not possibly have found out the secret reasons existing between Cassatt and the bank why it was improper for Cassatt to draw these drafts."

Per contra, for the defendant in error, the following:

(1–3) Questions of practice.

(4) "The receipt by the plaintiff in error of the drafts of the Pella National Bank, signed by Cassatt in his official capacity, to be used as margins for his personal trades, put the plaintiffs in error upon notice that Cassatt was using the bank's funds without authority, and plaintiffs in error took such drafts at their peril, and are accountable to the receiver for the avails thereof. (a) The distinction asserted in counsel's brief as to this point does not exist. Hanover Nat. Bank v. American Dock & Trust Co., 148 N. Y. 612, 43 N. E. 72; Moores v. Bank, 15 Fed. 141; Id., 111 U. S. 156, 4 Sup. Ct. 345; Trust Co. v. Boynton, 19 C. C. A. 118, 71 Fed. 797; Gerard v. McCormick, 29 N. E. 115, 130 N. Y. 261; Anderson v. Kissam, 35 Fed. 699, 703. (b) The form of these drafts put plaintiffs in error upon notice. Anderson v. Kissam, 35 Fed. 699, 703; Chrystie v. Foster, 9 C. C. A. 606, 61 Fed. 551; Moores v. Bank, 15 Fed. 141; Id., 111 U. S. 156, 4 Sup. Ct. 345; Claflin v. Bank, 25 N. Y. 293; Gerard v. McCormick, 29 N. E. 115, 130 N. Y. 261; Wilson v. Railway Co., 24 N. E. 384, 120 N. Y. 145; Shaw v. Spencer, 100 Mass. 382, 384; Bank v. Wagner (Ky.) 20 S. W. 535; Trust Co. v. Boynton, 19 C. C. A. 118, 71 Fed. 797. (c) The defect appearing upon the face of the drafts, the doctrine of Bank of Edgefield v. Farmers' Co-op. Mfg. Co. and Goodman v. Simonds, cited by plaintiffs in error, does not apply. (d) The circumstances of the case of Goshen Nat. Bank v. State were radically different from that at bar. (e) The fact that by common usage bank drafts are treated as cash, if that be a fact, cannot be availed of by one who receives the bank's draft, signed by the president, in payment of the president's debt, to relieve the recipient from the operation of the rule that he who knowingly receives from an agent, and on the agent's account, that which belongs to the principal, does so at his peril. Anderson v. Kissam, 35 Fed. 699, 703; Shaw v. Spencer, 100 Mass. 384; Moores v. Bank, 15 Fed. 141; Id., 111 U. S. 156, 4 Sup. Ct. 345."

(5) "Having failed to make inquiry, the plaintiffs in error are bound by the actual facts as they existed, and will not be heard to contend that inquiry would have been unavailing. Shaw v. Spencer, 100 Mass. 384; Trust Co. v. Boynton, 19 C. C. A. 118, 71 Fed. 797; Manufacturing Co. v. Whitehurst, 19 C. C. A. 130, 72 Fed. 502."

(6) "The course of dealing between the bank and plaintiffs in error did not create a presumption, upon which plaintiffs in error could rely, that the draft sued upon was properly obtained by Cassatt, and that the plaintiffs in error were entitled to receive its avails in payment of a debt due from Cassatt. There was no implied authority for his act. Chrystie v. Foster, 9 C. C. A. 606, 61 Fed. 551; Anderson v. Kissam, supra; Wright's Appeal, 99 Pa. St. 425; Hill v. Publishing Co. (Mass.) 28 N. E. 142; Powell v. Rogers, 105 Ill. 318; Berwind v. Schultz, 25 Fed. 912; Clews v. Bardon, 36 Fed. 617; Briggs v. Spaulding, 141 U. S. 131, 11 Sup. Ct. 924; Percy v. Millaudon, 8 Mart. (N. S.) 68, 74, 75."

(7) "The court found, in effect, that the transactions on account of which these drafts were forwarded were gambling deals. Therefore the avails of the drafts could be recovered by the receiver, whether the brokers were or were not put on notice. (a) The finding is that neither party intended actual sales or purchases, but purely speculative transactions in 'futures.' The intent governs. Irwin v. Williar, 110 U. S. 499, 4 Sup. Ct. 160; Boyd v. Hanson, 41 Fed. 174; Insurance Co. v. Watson, 30 Fed. 653; Kirkpatrick v. Adams, 20 Fed. 287; Embrey v. Jemison, 131 U. S. 336, 9 Sup. Ct. 776; 2 Benj. Sales (6th Am. Ed.) 828. (b) The broker is particeps criminis. Irwin v. Williar, 110 U. S. 499, 510, 4 Sup. Ct. 160. (c) The intent is a question for the jury (in this case for the court to find, as a question of fact). Kirkpatrick v. Adams, 20 Fed. 287. (d) A principal may recover moneys gambled away by his agent. McAllister v. Oberne, 42 Ill. App. 287; Smith v. Ray, 89 Ga. 838, 16 S. E. 90;

Digitized by Google

Mason v. Waite, 17 Mass. 560; Corner v. Pendleton, 8 Md. 337; Caussidiere v. Beers, *41 N. Y. 198, 1 Abb. Dec. 333; Burnham v. Fisher, 25 Vt. 514; Pierson v. Fuhrmann (Colo. App.) 27 Pac. 1015."

D. M. Kirton, for plaintiff in error Lamson Bros. & Co.

Charles H. Dupee, for plaintiff in error C. B. Congdon & Co.

Lockwood Honoré and John P. Wilson, for plaintiffs in error E. H. Phelps and L. W. Bodman.

Frank H. Scott, John H. Hamline, and Frank E. Lord, for defendant in error.

Before WOODS and JENKINS, Circuit Judges, and BUNN, District Judge.

WOODS, Circuit Judge, after stating the facts, delivered the opinion of the court.

It is not important to inquire whether the court erred in admitting evidence of immaterial facts stated in the special findings. The one question upon a special finding or verdict is "of the sufficiency of the facts found to support the judgment." In determining that question, of course, every relevant and material fact found must be considered, and every irrelevant or immaterial fact rejected; and when the fact has been excluded from consideration there can remain no harm from the error of admitting the evidence by which it was established. The special findings recite many facts and circumstances which, though not irrelevant, are of an evidentiary character only. The ultimate facts on which the rights of the respective parties must be determined are few. They are comprehended in the statement that Cassatt, being president and practically in sole control of the bank, without authority, and without the knowledge of any other officer or stockholder, discharged his individual liabilities to the plaintiffs in error, respectively, by sending them drafts of the bank, payable to their order, and drawn upon the bank's correspondent in Chicago, with which it had sufficient moneys out of which the drafts, after indorsement by the payees, were duly paid. Much discussion has been expended upon the effect of the form of the drafts, in connection with the use to which they were put, as notice to the payees that they were drawn without authority; but, before entering upon that inquiry, it will be well to dispose of minor contentions.

Assuming that the plaintiffs in error, when the drafts were tendered them, were put upon inquiry, it is asked, what would have been the subject of inquiry? and what facts would have been developed? It is not accurate to say that the inquiry would have been, "Did Cassatt pay the bank for the drafts?" Payment for the drafts, doubtless, would have been important evidence, but not necessarily conclusive upon the true point of inquiry, which was, "Did Cassatt have authority to draw the drafts?" He might have had money in the bank, or have put it there at the time of drawing the drafts, and yet have been without authority to draw them; and without money on deposit, and without present payment, his authority to draw in the form and for the purpose proven might have been beyond dispute. If, trusting to his integrity and individual responsibility, the directors authorized

Digitized by Google

him to use the drafts of the bank for his individual purposes, whether paid for at the time or not, any loss resulting from a misuse of that authority ought, of course, to fall upon the bank, rather than upon a third person, who in good faith had paid value for the paper; and the question of good faith would be determined by the ordinary rules applicable to the transfer of mercantile paper. The fallacy or inapplicability of the supposed case of John Doe, living at Pella, and procuring of the bank a draft payable to the order of a distant creditor, and forwarding the draft to the creditor in discharge of the debt, is evident. It is, doubtless, a not unusual practice for debtors to obtain and send to their creditors bank drafts, drawn payable to the creditors, and, of course, in every such case the creditor knows that the money of the bank is being used to pay to him the debt of another,—in the case supposed, the debt of John Doe. But in such cases the creditor may accept the draft without inquiry, not, as counsel have said, because of a presumption that the debtor had paid for the draft, but because the draft had been drawn by the authorized officer of the bank in the usual course of business, acting without apparent or known personal interest in the transaction. The receiver of such a draft, though named as payee, and on the face of the paper apparently a party to the original execution thereof, is not so in fact, but, as against the drawer, is in effect an indorsee, affected only by vices or infirmities of which he had notice before he accepted it. He might know that the draft had not been paid for, and yet take it on the assumption of regular and proper execution upon some other consideration than payment. The inquiry, therefore, which these plaintiffs in error should have made, was whether Cassatt had authority to draw drafts of the bank upon funds of the bank in possession of its correspondents for use in his individual transactions. Such an inquiry involved no difficulty beyond communicating to the directors of the bank, other than Cassatt, the fact that such a draft or drafts had been tendered in discharge of liabilities incurred in dealings upon the Board of Trade in Chicago, and asking whether the execution of the paper had been authorized. There can be little doubt what would have been the result of such an inquiry, accompanied with a frank and full statement of the facts as they were known to the payees of any of the drafts in suit at the time of execution. It would not have needed a discovery of Cassatt's fraudulent bookkeeping to enable the directors to say whether the execution of such paper had been theretofore authorized, or then had their approval. As contended, it was clearly no duty of the plaintiffs in error to undertake an examination of the books, which, once they commenced inquiry into the management of the bank, they would have learned had been wholly in the keeping of Cassatt, and of clerks who could not be expected to testify against him. Inquiry of Cassatt, too, it is to be presumed, would have been useless, and therefore, if made, would not have met the requirement of the law. The one thing necessary to be known was whether Cassatt had authority to make the proposed use of the bank's paper. The authority could have come only from the directors, by direct resolution or by acquiescence or implied assent, and the plain, unmistakable course was to push the inquiry, wherever begun, to the source of authority.

Digitized by Google

It is a perversion of speech to say that "the findings showed that Cassatt had paid the bank for every one of the drafts," or that if the defendants had gone to Pella, and had ascertained the facts, they would have found that Cassatt was a depositor in the bank, that he had charged each draft to his account, that he had on deposit ample funds to meet the charge, that he gave due credit on the books of the bank to its Chicago correspondent for the amount of each draft, and that no step in the transaction was hidden from the bank, but was known to it and recorded in its books, and that a statement of the transactions to the bank could have caused no surprise, because the bank knew of each as it occurred during the whole period of twelve years. The entries on the books, it may be said, tended to show the facts as stated; but the entire finding shows that Cassatt was not a depositor, and in no way made good to the bank the moneys taken from it by means of the drafts, which takings, it is expressly found, were acts of theft or embezzlement. That finding of the ultimate fact of wrongful and unauthorized appropriation cannot be overcome by proof of book entries, which, even if honestly made, would amount only to evidence tending to show the contrary. False entries took no money out of, and put none into, the bank; and it was not for the fraudulent bookkeeping, or forgeries, or any other wrong or series of wrongs which preceded the execution of the drafts, that the plaintiffs in error were held responsible. On the contrary, we agree that, if they are to be compelled to make restitution, it is because the particular sums which they received were wrongfully taken by Cassatt from the bank, and they were parties to the wrong. This proposition does not depend upon, and cannot be refuted by, the bookkeeping disclosed in the special finding. It embraces the three propositions contended for by counsel, namely:

"(1) The person from whom restitution is sought must have been a party to the particular transaction in which the wrong was accomplished. (2) The particular transaction to which such person was a party must have been hidden from the wronged party. (3) A mere statement to the wronged party of the facts of such particular transaction would have at once disclosed the fraud."

While the transactions appeared upon the books, as stated in the findings, it is a misuse of words, and inconsistent with honest thought, to say that they were known to the bank. Possession of facts, in books purposely kept in a manner to conceal the truth, is not, in law or morals, knowledge of the facts. Cassatt alone had knowledge of the truth, and, though he was president, his knowledge of his own frauds, perpetrated for his individual purposes, was not attributable to the bank.

The foregoing considerations dispose of the proposition that the bank, by allowing Cassatt to make a like prior use of drafts drawn by himself, had established a course of dealing which estops the bank to deny his authority. Of course, an estoppel may arise out of such a course of dealing, but whether, in a particular case, it has arisen is a question of fact depending upon the circumstances. It is hardly credible that in the facts here disclosed a jury, or a right-minded court, could find an estoppel; but it is enough to say that it has not been found, and that the facts supposed to point that way which

Digitized by Google

are stated in the finding do not overcome the ultimate fact stated that the sums for which these drafts were drawn were wrongfully taken by Cassatt. That is equivalent to a direct finding that he had no authority to draw and use the drafts in that way. For the same reasons the proposition that the directors of the bank were guilty of culpable negligence is unavailing. There is no finding that there was such negligence, nor, if there were, that the plaintiffs in error were influenced by it to accept the drafts, of which, on the facts known to them, Cassatt was making an improper use.

These considerations of bookkeeping, course of dealing, negligence of directors, and estoppel aside, the main question is simplified: When Cassatt tendered these drafts,—each one of them to the payee named in it in payment of an individual obligation, in which the bank was not interested,—was the taker, accepting the paper in discharge of the debt, a purchaser in good faith, or was he put upon notice of Cassatt's lack of authority to draw upon the funds of his bank for his individual purposes? Upon that question our conclusion is that the opinion in Anderson v. Kissam, 35 Fed. 699, is sound in principle and in accord with the weight of authority. The judgment rendered in that case, it is true, was reversed, but upon a minor point, unconnected with the main question, which there, as here, was fundamental; and the fair inference would seem to be that if the supreme court, with the question before it, had doubted the ruling and opinion below in that respect, it would not have left the question undetermined.

The case of Goshen Nat. Bank v. State, upon which the plaintiffs in error chiefly rely, is distinguishable. The drafts in that case were drawn by the cashier, and were used to pay his individual debt; but, as the opinion is careful to state, it was "proved on the trial that the cashier had the custody and possession of the blank drafts for the claimant [the bank], and that he had the right to sign drafts drawn by the claimant on its corresponding banks, and that he had the right to draw a draft on the corresponding bank of the claimant for himself, upon the same terms that he had to draw a draft for a stranger. * * * which means," as the court assumed, "upon payment to the bank of the amount of the draft." That this proof of special authority to draw a draft for his own use was the distinguishing point of the decision is declared in the later case of Bank of New York Nat. Banking Ass'n v. American Dock & Trust Co., supra, where it was held that a by-law of a warehouse company, authorizing an officer of the company to sign warehouse receipts, did not authorize him to sign a receipt for his own goods. "It is an acknowledged principle of the law of agency," it was there said, "that a general power or authority given to the agent to do an act in behalf of the principal does not extend to a case where it appears that the agent himself is the person interested on the other side. If such a power is intended to be given, it must be expressed in language so plain that no other interpretation can rationally be given it; for it is against the general law of reason that an agent should be intrusted with power to act for his principal and for himself at the same time." See, also, Hanover Nat. Bank v. American Dock & Trust Co., 148 N. Y. 612, 43 N. E. 72.

Digitized by Google

It is urged, however, "that there is a clearly-defined distinction between the acts of a cashier or president of a bank, in issuing its paper, and that of any ordinary agent." There are dicta in some of the opinions cited which, without attempting to define it, assert in general terms that there is a distinction. For instance, in Bank of New York Nat. Banking Ass'n v. American Dock & Trust Co., supra, in addition to what we have already quoted in reference to the case of Goshen Nat. Bank v. State, the court said: "And we also held, for the reason therein stated, that there was a difference in the case of bank or cashier's drafts from most cases of agency." There is a plain difference in the fact that such drafts, once they have been issued, are commercial paper, and may be accepted in trade and commerce without inquiry into the consideration for their issue. No other basis for a distinction is suggested in Goshen Nat. Bank v. State, and that difference, it is to be observed, is not in the character or extent of the agent's authority, but in the nature of the subject on which it is exercised. It is true, as there said, that "bank or cashier's drafts are used so enormously at the present time in the payment or settlement of debts, or in other commercial transactions, that they have almost acquired the characteristics of money." An officer of a bank, however, has no right to appropriate the money of the bank to his individual uses, and, though a creditor, when offered money by his debtor, ordinarily may accept it without inquiry, yet, if, at the time he receives it, he is told or knows that it belongs to another, for whom his debtor is an agent or trustee, on the plainest principles he acquires no title as against the true owner. If, for instance, Cassatt had sent to the plaintiffs in error money of the bank, instead of drafts, advising them that it belonged to the bank, there could be no question of their liability to make restitution; and in what respect is their position better as presented than it would be on the facts supposed, even conceding that the drafts sent them were the same, or "almost the same," as money? The drafts bore proof on their face that they were drawn upon the funds of the bank; and that they were not drawn in the course of the bank's business, but in discharge of individual liabilities of the president of the bank to themselves, they, of course, understood. They therefore knew that, unless there had been conferred upon Cassatt an unusual and special authority, like that given the cashier in Goshen Nat. Bank v. State, supra, to sign and issue drafts of the bank in his private transactions, the paper sent them was unauthorized, and that for the proceeds thereof they would be liable to the bank or its representatives.

It is evident, however, that the drafts in question, when offered the plaintiffs in error, were not commercial paper, capable of treatment as money, and that the considerations of public policy on which the bona fide holder of such paper is protected, even though the rights of an antecedent holder be questionable, have no application or relevancy to the case. The drafts were drawn in favor of plaintiffs in error, and until accepted by them they were not contracts, and by accepting them they did not become assignees or purchasers of existing obligations, but simply parties to the original execution thereof, into whose rights the way to full inquiry is open, unless

Digitized by Google

closed by some estoppel outside of the paper itself, whatever its form. A primary party to the execution of instruments originated as these were cannot be a "bona fide purchaser," in the sense of the law merchant, and to hold the payee of such paper responsible for the proceeds received upon his own negotiation of it to a third party, who will be presumed to be an innocent purchaser, no more tends to discredit the paper, as an agency of business, than it tends to impair the value of money as a medium of exchange to hold one who receives it wrongfully accountable to the rightful owner. If a bank president or cashier, because possessed of a general power to sign drafts, may draw drafts of the bank in favor of his individual creditor, and it is to be said that "there is nothing unusual or suspicious in this way of making the draft payable to the creditor of the cashier or president who draws it," then in Claflin v. Bank, 25 N. Y. 293, for all we can see, it might just as well have been said that there was nothing unusual or suspicious in the acceptance or certification by the president of the bank of a check or draft drawn by himself. The power of such an officer to draw drafts of his bank upon others is no greater than his authority to accept the checks or drafts of others upon his bank; yet in that case it was held that the general authority of the president of the bank to certify checks drawn upon it did not extend to checks drawn by himself, and it was declared not to be necessary for the principal in such case to show that the agent had acted unfairly or that he himself had sustained an injury, but that the act of the agent is deemed to be unauthorized, and the contracts void. We agree with counsel for the defendant in error that the concern of the courts should not be to make it easy for persons in fiduciary positions to make way with that which is committed to their care, by relaxing this salutary rule, through considerations of the supposed necessities of business and commerce, and that the rule should not be suspended, where the opportunities for breach of trust are largest, merely because they are large. The best public policy requires that bank officers be rigidly held to the ordinary and well-understood rule. There is, we believe, no good reason to the contrary.

In the first case, where there was a trial by jury and a general verdict, reference is made to Cassatt's own testimony for proof that he "had authority to draw drafts to his own or his creditor's order, upon payments by him to the bank for the same," and on this assumption, it is contended, on the authority of Hanover Nat. Bank v. American Dock & Trust Co., and like cases, that the fact of drawing the drafts was a representation, on which the plaintiffs in error had a right to rely, that such payments had been made. Whether he had such authority was a question of fact, of which the verdict is conclusive, unless material error of law occurred at the trial. The testimony referred to is quite indefinite and uncertain, but, if it affords ground for an inference that Cassatt did in fact draw drafts to his own order, or in favor of his creditors, it shows no basis whatever for a belief that he did so with the knowledge of other officers of the bank. In the case last referred to there was proof that the president of the warehouse company had issued receipts to himself before the one in question, and there was evidence of facts and circumstances, sufficient

Digitized by Google

to go to the jury, tending to show that he had authority to do so. It being apparent on the face of the drafts here in question that they were drawn upon the funds of the bank, it was impossible for the plaintiffs in error to receive them in discharge of Cassatt's individual obligations to themselves without being put upon inquiry whether the president had in fact the authority which he assumed to exercise; and it was not enough to make inquiry of him, nor permissible to rely upon the implied representation deducible from the execution of the drafts. That the execution of the drafts by the president of the bank in his own interest was without authority, and that the plaintiffs in error were not, and could not have been, innocent holders, the evidence was without conflict, and so clear that the court might have directed a verdict in favor of the plaintiff; and on this view of the case the other questions discussed, which in themselves are of minor importance, lose all significance. It is said that "the question of gambling was an issue in the case," and the refusal of a special request for instruction on the subject, it is urged, was material error. No such issue appears in the pleadings, and no mention of the subject is found in the court's charge to the jury. In fact, however, by necessary implication, the question was excluded from consideration when the jury was told that the plaintiff could recover only upon proof that Cassatt, without the authority, knowledge, consent, or acquiescence of the board of directors of the bank, misapplied the moneys of the bank in question to his own use, and that the defendants had knowledge, or were aware of such facts as would amount to knowledge on their part, that he was so misapplying the money of the bank; and the statement that the defendants must have had such knowledge was repeated in substantially the same words and with equal clearness in a separate charge. In short, the controlling question was fairly submitted to the jury, and, it is clear, was rightly decided. The allowance of interest was proper.

The judgment in each of the cases is affirmed.

(94 Fed. 45.)

RUSSELL v. YOUNG et al.

(Circuit Court of Appeals, Sixth Circuit. May 2, 1899.)

No. 630.

1. CONTRACT FOR LEGAL SERVICES — CONSTRUCTION — AMOUNT OF COMPENSATION.

A contract between attorney and client for the rendition of legal services in connection with an estate to which the client was an heir, providing that the attorney's compensation should "in no event be more" than that received from other heirs similarly interested, nor more than a certain per cent. of the amount recovered for the client, does not fix the amount of compensation, but merely imposes maximum limits thereto, leaving the amount to be determined on a quantum meruit, within such limits.

2. SAME—EVIDENCE OF PRACTICAL CONSTRUCTION BY PARTIES.

Evidence of a practical construction placed on a written contract by the parties is not admissible to affect its construction by a court in an action thereon, where its terms are plain and unambiguous.

Digitized by Google

In Error to the Circuit Court of the United States for the Northern District of Ohio.

This is an action at law to recover compensation for legal services rendered by the plaintiff in error under a contract in these words:

"Whereas, George L. Carlisle is the attorney at law and in fact of Cornelia T. Young in all matters relating to her interests in the estate of Silas S. Stone and Margaretta Stone, both deceased; and whereas, it may become necessary or proper for him, in the discharge of his duties aforesaid, to have the assistance of an Ohio lawyer: Now, therefore, this shows that L. A. Russell, of Cleveland, Ohio, has been, and is hereby, retained and employed by George L. Carlisle, of New York City, to appear for Cornelia T. Young in any partition or other suit or proceeding which may be commenced or taken with respect to the settlement of her interest in the estates of Silas S. Stone and Margaretta Stone, both deceased, either or both, and to do and perform all things necessary for the speedy and complete settlement of said interest. Said Russell accepts said employment, and it is mutually agreed as follows: 1st. Said Carlisle shall be consulted as the principal or employing attorney herein in any such suit or proceeding hereunder (and as often as may be prior thereto) which said Russell shall commence or take, and (as near as may be) all papers necessary and of importance for the prosecution of said interest shall be first submitted to said Carlisle; and all payments on account or otherwise of said interest shall be made to said Carlisle as the attorney for said Young. 2nd. The compensation which said Russell may charge for such services shall in no event be more than he will charge and receive from either Silas S. Stone or his brother, Frank W. Stone, for like services, nor more than seven and one-half (7½) per cent. of the net amount of whatever recovery in cash shall be made through his efforts for said Cornelia T. Young during the continuance hereof, except that if a suit in equity (other than partition) or in law, for ejectment, shall be brought in the name of said Cornelia T. Young hereunder against the personal representatives, heirs, or next of kin of said Margaretta Stone or Silas S. Stone, deceased, or any other person or persons, to recover any moneys or other property now in the possession of said personal representatives, heirs, next of kin, or any other person, under a claim of title thereto or interest therein, but in which said Young is entitled to share, or if such suit be brought against said Young, then and in any such event said Russell will charge and shall be entitled to receive for such services no more than ten (10) per cent. of the net final recovery therein to said Cornelia T. Young. It is also understood and agreed that in event that any real or other property belonging to said estates, or either of them, be, in the settlement of the same, recovered by said Russell for said Cornelia T. Young during the continuance hereof, and which shall be set apart and accepted by said Young, either in common with her said brothers or either of them, or in severalty, that said Russell, for the purpose of computing and collecting his compensation hereunder, shall be entitled to substitute the value of said Young's interest in such lands at the time as so much cash; and, if dispute shall arise as to the true value thereof, the same shall be finally determined by arbitration in the usual way. In witness whereof, we have hereunto set our hands and seals this 12th day of February, 1892.

"Signed, sealed, and delivered in the presence of James L. Barger.

"George L. Carlisle.
"L. A. Russell."

The defendants were Cornelia T. Young and husband, William S. Young, and George L. Carlisle. There was a jury, and verdict for plaintiff in error for a balance due under the contract of $3,348.89 against William Shipman Young and wife, Cornelia T. Young, and a verdict for George L. Carlisle. From the judgment thereon the plaintiff in error, L. A. Russell, has sued out this writ of error.

L. A. Russell, in pro. per.

Digitized by Google

Before TAFT and LURTON, Circuit Judges, and RICKS, District Judge.

LURTON, Circuit Judge, after making the foregoing statement of facts, delivered the opinion of the court.

Mr. Russell's suit is based upon the claim that under the contract he is entitled to 7½ per cent. upon the value of Mrs. Young's share of $206,000, and he sues for the balance due him upon this basis, after crediting Mrs. Young with $4,506.49 collected and applied upon his fee. The defense was that the contract only provided that Mr. Russell's compensation should not exceed certain limitations therein mentioned, and did not otherwise settle or determine what his compensation should be. The circuit judge interpreted the contract according to the contention of the defendants in error, and held that Mr. Russell could only recover such compensation as his services were reasonably worth, but not to be more than he had charged and received from Silas M. Stone or Frank W. Stone for like services, nor more than 7½ per cent. of the aggregate value of money and land recovered as the share of his client, Mrs. Cornelia T. Young. This is the plain meaning of the contract under which Mr. Russell's services were rendered. It is true that the agreement does not say, in words, that Mr. Russell is to be paid according to the value of his services, or such compensation as is usual and reasonable between client and attorney under all the circumstances of the case. But in the absence of an express agreement the law supplies this term. Here the parties have chosen, however, to provide that such compensation shall "in no event be more than he will charge and receive from either Silas M. Stone or his brother, Frank W. Stone, for like services, nor more than seven and one-half per cent. of the net amount of whatever recovery in cash shall be made through his efforts for said Cornelia T. Young during the continuance thereof." But it is asked why the parties did not plainly say that Russell's compensation should be a quantum meruit, if that was the intention? To say this was unnecessary. The law implied an agreement that one should pay and the other receive reasonable compensation, according to the value of the services rendered. But the law did not imply that a quantum meruit should not be more than the compensation charged another client having the same interest, nor that it should not be more than 7½ per cent. upon the value of the share recovered. This limitation upon the compensation to be received was therefore placed upon the contract implied by law. But if the parties intended that 7½ per cent. should be received, unless in the event a less sum was received from Mrs. Young's brothers, why were the words "not more than" and "no more than" inserted in the agreement? To say that they were inserted through "awkwardness of expression," as suggested by counsel, or ignorance of their legal effect, is no answer. Mr. Carlisle was the New York counsel for Mrs. Young, as well as her attorney in fact. Mr. Russell was retained to assist him. To assume that these able and experienced lawyers either awkwardly, carelessly, or ignorantly provided that Mr. Russell's compensation should "in no event be more than he will charge or

Digitized by Google

receive from" the two brothers of Mrs. Young, also represented by him, and having identical interests, "nor more than seven and one-half per cent." upon the value of the share recovered for Mrs. Young, and yet mean, as is now contended, that Mr. Russell was to receive 7½ per cent. upon the aggregate recovery, unless he received a less sum from his other clients, in which event he was to receive the same from Mrs. Young, is to abuse language, and do violence to the presumption that these gentlemen knew the meaning of the plain terms they employed in this agreement. Nor is this obvious construction affected by the subsequent clauses of the agreement. The clause providing for the contingency of an action of ejectment or a suit in equity (other than in partition), that Mr. Russell should charge or receive "no more than ten per cent. of the net final recovery therein," did not become effective. No such suit as there contemplated was ever brought or defended. But even in that clause we find the same idea of limiting a quantum meruit recovery so that the fee for services in such suit should not be ten per cent., but "no more than ten per cent." The last clause simply provides that, "in computing and collecting his compensation," land set apart to Mrs. Young shall be estimated as cash; being valued for that purpose by appraisers, if necessary.

Plaintiff offered to prove that he had deducted 7½ per cent. of every cash collection made by him, and remitted the remainder to Mr. Carlisle, with a statement showing that he had retained 7½ per cent. as compensation for the collection of the particular remittance, and that no exception had ever been taken by Mr. Carlisle to this construction of the contract. This evidence was offered for the purpose of showing that the parties had construed the contract according to the present contention of plaintiff in error. The evidence was rejected upon the ground that the contract was not doubtful, and needed no such side light in its interpretation. Evidence as to the practical construction by the parties of a doubtful or ambiguous instrument is often of great importance. But such evidence can never control the effect, unless the legal meaning of the instrument is doubtful. Railroad Co. v. Trimble, 10 Wall. 367–377; Land Co. v. Doll, 35 Md. 89; Fogg v. Insurance Co., 10 Cush. 337. To give effect to a written agreement according to an erroneous construction placed upon it by the parties would not be to construe, interpret, and enforce the written agreement upon which the action is brought, but to enforce a new and different contract. No question of a change or variation in the agreement by mutual assent was in issue. There was therefore no error in the exclusion of the evidence offered. The case was properly submitted to the jury under instructions to find upon the evidence the value of the legal services of Mr. Russell, and deduct therefrom the amount he had received, and return a verdict for the balance due him, if any. There was no error in the admission or exclusion of evidence in this aspect of the case, and no exception to the charge, except in so far as it involved the interpretation of the contract already considered. Judgment affirmed.

Digitized by Google

(94 Fed. 52.)

STAUNTON et al. v. GOSHORN.

(Circuit Court of Appeals, Fourth Circuit. May 2, 1899.)

No. 295.

1. MALICIOUS PROSECUTION—PROBABLE CAUSE.
In an action for malicious prosecution, defendants are not liable, no matter how vindictive they may have acted, nor what their motives may have been, if they acted with probable cause.

2. SAME—QUESTION FOR COURT.
Whether or not there was probable cause for the institution of a criminal proceeding, where the facts are undisputed, is a question of law for the court; otherwise, one of fact for the jury.

3. SAME—EVIDENCE.
The evidence showed that certain public officials in charge of the public records of the court and the sheriff of the county were informed, by a deputy clerk, that a former clerk was about to steal certain public records and destroy them, with an intent to prejudice such officials by showing payments made without proper vouchers, and that on a certain day he would carry his purpose into effect. On such day the former clerk was discovered by the officials removing such records from the clerk's office, and thereupon they procured his arrest. *Held* that, in an action by such clerk for malicious prosecution, the jury should have been instructed that there existed, so far as the public officials were concerned, probable cause for the institution of the criminal proceedings.

4. SAME.
A former clerk was arrested on a charge of stealing public records with intent to destroy them, but defended on the ground that his purpose was simply to examine the same in order to ascertain their validity. Certain public officials had been informed by a deputy clerk of the intent of such former clerk to steal the papers, and, on finding him in possession of the papers, caused his arrest. *Held*, in an action against such officials and the deputy clerk for malicious prosecution, it was error to instruct the jury that if the purpose of such former clerk in taking the papers was to examine them, and not to destroy them, and the person giving the information to the public officials had knowledge of such intent, that the arrest and prosecution of such clerk for taking the papers was without probable cause, in that it made no distinction between the public officials and the deputy clerk, as such public officials had no knowledge of the facts other than as communicated to them by said deputy clerk.

5. SAME—RES JUDICATA.
Where an indictment for stealing certain road orders from the office of the clerk of court was sustained on demurrer, and the accused tried thereunder and acquitted, in a subsequent action for malicious prosecution accused cannot claim that the prosecution was instituted without probable cause, because the road orders were not subjects of larceny, as the judgment of the criminal court was binding and valid on the questions necessarily involved in the maintenance of the indictment, to wit, that a criminal offense was charged.

6. SAME—ADVICE OF ATTORNEYS.
The advice of reputable counsel, bona fide sought and given on full and fair statement of all the facts, and as a consequence of which a prosecution was instituted, is a sufficient defense in a suit for malicious prosecution.

7. SAME.
On a trial for malicious prosecution, the defense that defendants acted under the advice of attorneys may be sustained, though the advice was taken after the arrest, but before the issuance of the warrant.

8. SAME—EVIDENCE.
On a trial of several defendants for malicious prosecution in procuring the trial of plaintiff for stealing public records, plaintiff could not

Digitized by Google

prove statements made by him to third parties before the taking of the papers, as to what were his objects and purpose in procuring such papers, such evidence being hearsay.

In Error to the Circuit Court of the United States for the District of West Virginia.

This is a writ of error to the judgment of the circuit court of the United States for the district of West Virginia, rendered on the 11th of August, 1898, in an action for malicious prosecution pending in said court, wherein the defendant in error here was plaintiff, and the plaintiffs in error were defendants. The case grew out of a criminal prosecution in the criminal court of Kanawha county, W. Va., against the defendant in error inaugurated under the following circumstances:

J. W. Goshorn, defendant in error, had been for two terms, of six years each, expiring on the 1st of January, 1897, clerk of the county court of Kanawha county, in the state of West Virginia. On the said 1st day of January, 1897, E. W. Staunton succeeded him as clerk for the term of six years, having been elected at the preceding election. The plaintiff in error Peter Silman was sheriff of the said county from the 1st day of January, 1893, to the 1st of January, 1897. The plaintiff in error John A. Jarret, on the 1st of January, 1897, became the chief deputy clerk of the said E. W. Staunton; and plaintiff in error Robert A. Coleman, who had been, for several years prior and up to the expiration of his last term of office, deputy clerk for defendant in error, Goshorn, continued to act as such deputy clerk for Staunton, Goshorn's successor. The defendant in error, J. W. Goshorn, and the plaintiffs in error Staunton, Silman, and Jarret, were unfriendly to each other, growing out of a political feud theretofore existing in the said county. During the week preceding the 23d of November, 1897, the day on which defendant in error was arrested, plaintiff in error Robert A. Coleman informed his principal, Staunton, and said Jarret and Silman, that the defendant in error, Goshorn, had had several conversations with him in reference to getting from the clerk's office certain road orders, allowed by the county court of said county to Silman in the settlement of his accounts as sheriff, in which he said that, if he could get hold of these papers, he would then have the newspapers make an investigation, and publish the fact that there were no vouchers for the allowance in question, which would create a great stir, and get the county court, Silman, and Staunton into trouble; and that he had proposed to him (Coleman) to take the road orders out of the clerk's office, and that he (Goshorn) would destroy them. Upon receiving this information, Staunton, Silman, and Jarret determined to lay a trap to catch Goshorn, if he took the papers, and told Coleman that he could make a proposition of some kind to him, so that, if he desired to get the road orders, he would have an opportunity to do so.

On Saturday morning before the arrest of the defendant in error, Coleman had another conversation with him, in which Goshorn, as testified to by Coleman, again renewed the proposition to take the papers from the office, and Coleman told him that he would go to the extent of placing the road orders where he (Goshorn) could get them; whereupon Goshorn requested Coleman to place them in the fourth box of a certain row of tin boxes in the record room of the clerk's office, and have them there on the following Tuesday at noon, and that he would take the papers when Chief Deputy Clerk Jarret left the clerk's office for dinner, to which Coleman agreed. On the same evening Coleman informed Staunton and Silman of what had occurred, and of Goshorn's purpose to take the papers out of the clerk's office on the following Tuesday, and Staunton and Silman told Coleman that they would make an arrangement so that Goshorn would not be able to get away with the papers. The orders in question were placed in the tin box by Coleman, in the presence of Jarret, about half past 11 o'clock on Tuesday morning, the 23d of November, 1897. About noon, almost immediately after Jarret had left the clerk's office for dinner, according to the evidence of the plaintiffs in error, Goshorn, who had been talking with the deputy sheriff, Harlis, near the side entrance to the court house, went into the record room, got the papers, and left the building. Coleman was not in the room when he got the papers, and

Digitized by Google

did not give them to him. Shortly after leaving the building, Goshorn met plaintiff in error Silman, and returned to the clerk's office with him, in reference to the purchase of a lot of land; but before his return Jarret came back to the office, went into the record room, and found that the papers were gone from the box in which they had been placed. Goshorn, after examining the records with Silman for a short while, and before the examination was completed, asked Silman to excuse him, as he desired to go into the water-closet; that he left the record room, went into the middle office, and, as he started to enter the water-closet, Deputy Clerk Jarret accosted him, and said that he had missed some papers from the clerk's office; whereupon Goshorn took the papers from his pocket, and explained that they were some papers which Deputy Clerk Coleman had given him; and thereupon Silman and Jarret instructed the sheriff and his deputies, who were present, to arrest him, and he was taken into custody by them.

The testimony of the plaintiffs in error further shows that the purpose of Staunton and Jarret was to protect these road orders and other papers in the clerk's office by catching the person who had an intent to take them unlawfully and for illegal purposes, and that the purpose of Silman was to protect the vouchers on which the drafts had been issued to him; that they acted in good faith in all that they did, believed Coleman's statements, and that the time and circumstances under which defendant in error, Goshorn, took the papers corresponded with the information given to them by Coleman on the previous Saturday. Plaintiffs in error Staunton, Silman, and Jarret so testified as to their purpose and motives in what they did, and as to the information imparted to them by Coleman of Goshorn's purpose to secure the papers, his intention to destroy them, and his plan of securing them. They further testified that they believed Coleman's statements, and acted in good faith in all that they did. Coleman corroborated the statements of the plaintiffs in error, and further testified as to his interviews with Goshorn, as above mentioned. That the defendant in error never had any conversation or arrangement to get the papers or road orders with any of the plaintiffs in error except Coleman, and did not know of the fact that Coleman had communicated to his co-plaintiffs in error his (Goshorn's) purpose and plan to take the papers, nor did he know of the arrangement that had been made to entrap him, and in the entire dealing nothing occurred between Goshorn and any of the plaintiffs in error except Coleman. That Coleman did not know of the purpose to have defendant in error arrested if he took the papers, and did not know what steps would be taken to prevent Goshorn from getting away with or destroying the papers if taken.

The defendant in error, Goshorn, testified, in substance, that during the said week preceding the 23d of November, 1897, he met plaintiff in error Coleman on the street, and in conversation stated that the county court had only allowed him $1,500 for making out the land books, when it had allowed Staunton $1,800 for doing the same work, and inquired of Coleman why he had not told him of it, to which Coleman replied that he had not thought of it. Goshorn then said that he would sue the county court and expose some of its rascality. That Coleman then stated that the county court had allowed certain road orders to Peter Silman illegally, having paid some of them out of the bridge fund, and some of them were issued to persons claiming to be road surveyors when, in fact, they were not, and he (Goshorn) ought to get them and examine them. That subsequently, during the same week, Coleman again spoke to him, telling him of the action of the court, and urged him to get the road orders and examine them; whereupon he (Goshorn) told him that, if he would get them and give them to him, he would examine them. That on Saturday of the same week Coleman again mentioned to him the action of the county court in respect to these road orders, and urged him to examine them, and told him that he would get them for him in order that he might make the examination. That he replied that he was going out of town, but would be back on the following Tuesday, and that if he would then get them he would examine them, and, upon finding that they had been improperly allowed, he would give the facts to the press, and have them published for the information of the public. That in the last conversation, desiring to

Digitized by Google

have some conveyances made, he requested Coleman to copy some deeds for him in the clerk's office, which he agreed to do. That on Tuesday morning he met Coleman on the street, went with him to the clerk's office, Coleman explaining that he had not made the copies of the deeds, but would do so that morning. On the way to the court house Coleman told him that he could get the road orders and give them to him to be examined, but that he (Goshorn) stated that he could not make the examination in the court house, and would have to take them outside, for the reason that persons in the court house would watch him and prevent him from making an examination there. That after he went to the clerk's office, and had examined the records about another matter, and while his brother, Ernest Goshorn, was present in the record room, Coleman came to him, and told him that he had placed the road orders in a file box in the record room, where he could get them, but he refused to take them from the box, and told Coleman that he must get them himself and give them to him, which he did in the presence of said Ernest Goshorn, his brother. That he then put the papers in his pocket, went out of the office, started across to the newspaper office for the purpose of making the examination of the papers, where he met the plaintiff in error Silman, and returned with him to the clerk's office in reference to the purchase of a piece of property above mentioned, when he was accused of taking the papers, and placed in the custody of the sheriff, as before stated.

After the defendant in error, Goshorn, had been taken into the custody of the sheriff, he was taken by him before H. M. Bond, a justice of the peace, in a different part of the city, and there detained for nearly three hours before any warrant was issued against or served upon him.

The plaintiffs in error, other than said Coleman, immediately after Goshorn had thus been taken in custody, consulted with S. C. Burdette, then assistant United States district attorney, who had been formerly prosecuting attorney of Kanawha county, a lawyer of more than 15 years' experience, of high standing as a criminal lawyer, and the father of F. C. Burdette, then prosecuting attorney of said Kanawha county, and who frequently assisted his son in prosecutions in the state courts. That they explained to him all the facts relative to the matter, and all the circumstances leading up to Goshorn's arrest, including the plan arranged to catch him, and the information received by them from Coleman, before and after the plan was actually arranged, and asked said Burdette for advice in the matter. That thereupon he advised them that Goshorn should be prosecuted, and himself drafted and wrote the complaint, which was sworn to by plaintiff in error John A. Jarret, before said H. M. Bond, justice of the peace, before whom Goshorn had been taken, who thereupon issued the warrant for his arrest, charging him with the theft of the aforesaid orders and warrants on file in the said clerk's office, alleged to be of the value of $2,300, and the property of said Staunton, clerk as aforesaid, and the said Silman, late sheriff as aforesaid, and certain other persons whose names were unknown. Said Goshorn was thereupon arrested under the warrants so sworn out against him, and, after an examination of his case before the justice, was bailed for his appearance before the grand jury of the criminal court of Kanawha county to answer of and concerning the charges made against him. That on the 7th of January, 1898, Goshorn was indicted by the grand jury of the criminal court of Kanawha county for the offenses alleged against him, the prosecuting attorney, F. C. Burdette, conducting the examination before the grand jury which found the indictment. And he was subsequently, a demurrer to the indictment and each count thereof being overruled, tried in said court under said indictment, which trial resulted in an acquittal, on the 15th of February, 1898; whereupon this suit, on the 21st day of the same month, was instituted in the circuit court of the United States for the district of West Virginia, the defendant in error here, Goshorn, then being a resident of the state of New York.

Geo. E. Price and Malcolm Jackson (Flournoy, Price & Smith and Brown, Jackson & Knight, on the brief), for plaintiffs in error.

J. W. Kennedy (J. W. St. Clair, on the brief), for defendant in error.

Digitized by Google

Before GOFF, Circuit Judge, and MORRIS and WADDILL, District Judges.

WADDILL, District Judge (after stating the facts as above). The assignments of error are 34 in number, but, in the view this court takes of the case, it will not be necessary to pass upon all of them. The exceptions were taken mainly to the court's action in granting and refusing certain instructions, and amending others asked for by plaintiffs in error. The instructions, 24 in number, covered many difficult questions and various phases of the case. Five were given at the instance of defendant in error, 8 at the instance of the plaintiffs in error, the court amending, however, 2 of theirs, and rejecting altogether 10 others offered by them, and gave 11 instructions of its own.

It will be necessary to keep well in view just what the law is governing cases of this character. In order for the defendant in error to have maintained his suit, it was necessary for him to prove: (1) The existence of the prosecution, and the fact that plaintiffs in error were the prosecutors or instigators of the same; (2) that it finally terminated in his acquittal; (3) that it was instituted without reasonable or probable cause; and (4) that the plaintiffs in error were actuated by legal malice,—that is, improper or sinister motives; and that these four elements concurred.

It was not enough to establish that the prosecution complained of was instigated by the plaintiffs in error, and the proceedings instituted by them with malice and ill will towards defendant in error. It was necessary that the defendant in error should have gone a step further, and shown that there was no probable cause for the inauguration of the prosecution. If plaintiffs in error acted with probable cause, they were not liable in an action for malicious prosecution, it matters not how vindictively they may have acted or what their motives may have been. Wheeler v. Nesbitt, 24 How. 544, 550; Stewart v. Sonneborn, 98 U. S. 187, 192, 194, 195; Crescent City Live-Stock Co. v. Butchers' Union S. H. Co., 120 U. S. 141, 148, 149, 7 Sup. Ct. 472; Sanders v. Palmer, 14 U. S. App. 297, 307, 5 C. C. A. 77, and 55 Fed. 217; Munns v. De Nemours, 3 Wash. C. C. 31, Fed. Cas. No. 9,926; Scott v. Shelor, 28 Grat. 891, 899; Mitchell v. Wall, 111 Mass. 492; Howard v. Thompson, 1 Am. Lead. Cas. 200, 213; 1 Hil. Torts, c. 16, § 18.

It must also be borne in mind that from the evidence in this case plaintiffs in error Staunton, Silman, and Jarret did not occupy the same position as the plaintiff in error Coleman. They claim to have acted solely upon what Coleman told them, and defendant in error conceded that he talked with Coleman alone in reference to the papers alleged to have been stolen. There was no evidence that he had any conversation with any of the plaintiffs in error except Coleman, and Coleman fully corroborated his coplaintiffs in error, and testified that he communicated to them the fact that defendant in error desired to examine and take the papers in question for the purpose of destroying and making away with them, and said plaintiffs in error Staunton, Jarret, and Silman,

Digitized by Google

one and all, testified that in all did they acted in good faith and upon the information received from Coleman; Staunton and Jarret swearing that their purpose was to preserve and protect the public records in their custody, and Silman that his was to prevent the destruction of his vouchers.

The purpose and intent with which plaintiffs in error acted was most material, as bearing upon the question of probable cause; for, while malice may be inferred from the absence of probable cause, still the lack of probable cause would not be presumed because of the existence of malice. Whether or not there is probable cause for the institution of a criminal proceeding is sometimes a question of law and sometimes a question of fact. Where the facts are undisputed it is a question of law, and should be determined by the court; otherwise, it is one of fact and for the jury. Crescent City Live-Stock Co. v. Butchers' Union S. H. Co., 120 U. S. 141, 149, 7 Sup. Ct. 472; Stewart v. Sonneborn, 98 U. S. 187, 194; Sanders v. Palmer, 14 U. S. App. 308, 309, 5 C. C. A. 77, and 55 Fed. 217; Knight v. Railway Co., 9 C. C. A. 376, and 61 Fed. 87, 91.

It seems to us, upon the facts and evidence as certified in the record, there was no dispute as to why, and the circumstances under which, the plaintiffs in error Staunton, Silman, and Jarret acted. They and their co-plaintiff in error Coleman fully corroborated each other in every particular. Indeed, the only conflict was as to what occurred between defendant in error, Goshorn, and Coleman, of which Staunton, Silman, and Jarret had no knowledge, other than as communicated to them by Coleman, and what occurred at the time the papers were taken out of the box in the clerk's office. Goshorn's claim was that Coleman took the papers and gave them to him in the presence of his (Goshorn's) brother, whereas the evidence of the plaintiffs in error was that Goshorn took the papers out of the box himself, and that Coleman was not in the record room at all. Upon this state of facts, there being really no conflict in the evidence as to Staunton's, Silman's, and Jarret's connection with the institution of the criminal prosecution, and of the circumstances under which they acted, the jury should have been instructed that there existed, so far as they were concerned, probable cause for the institution of the criminal proceedings, and that the defendant in error, Goshorn, could not recover against them.

Staunton and Jarret were each public officials, in charge of the public records of the court, one as clerk and the other as deputy clerk of the county court of Kanawha county, and Silman was, as late sheriff, interested personally in preserving the public records, which contained his vouchers used in settlement with the county officially. They all testified that they were reliably informed of the purpose of defendant in error to steal the public records; that they believed the information they received, and watched to see if the records would be taken, as they had been advised they would be, and, seeing the supposed theft, they immediately caused defendant in error to be held until they could consult counsel as to the propriety of swearing out the warrant, and that, upon such advice, they caused the warrant to issue. What less,

Digitized by Google

as honorable officers, could they have done? And as to all this it is to be borne in mind that there was, so far as they were concerned, apparently no conflict in the evidence, except as to the single question whether Goshorn himself took the papers from the box before starting away with them or whether Coleman handed them to him. Whatever may have been his purpose and motive in procuring the papers, or whether he had been deceived or misled by Coleman, were matters of which they, according to the undisputed evidence in the record, were in total ignorance, except as advised by Coleman, whom they believed.

The answer of the defendant in error to all this was that the case was one in which the charge of conspiracy was made; that Coleman, Staunton, Silman, and Jarret were all conspirators, and therefore bound by the acts of each other, and they each stood, so far as defendant in error was concerned, in exactly the same position. This assumes that a charge of conspiracy is all that is necessary, which is not true. It must be followed by proof, and that proof must be sufficient to connect all of the alleged conspirators with the original unlawful design before the separate act of one can be imputed to them all, and proof of this appears to us to be utterly lacking in this case.

Among the instructions given by the lower court were the following, being No. 4, offered by the defendant in error, and the court's No. 9:

"No. 4. The court instructs the jury that if they believe from the evidence that the purpose and object of the plaintiff, in getting possession of the said road orders in controversy in this suit, was to examine them, in order that he might ascertain their validity or integrity, and not to destroy them, and that the defendant Coleman was made acquainted with such intention and purpose on the part of the plaintiff before he came in possession of said orders, then the arrest and prosecution of the plaintiff for the felonious taking of such orders was without probable cause, and the jury should so find."

"No. 9. The court instructs the jury that if they find from the evidence that the defendants Silman, Staunton, and Jarret, through defendant R. A. Coleman, placed the county orders mentioned in this suit where the plaintiff could get them, and that it was arranged by Coleman on behalf of the defendants with the plaintiff in this action that they would be placed in a certain box in the clerk's office, and that they were so placed, and that the plaintiff was informed by Coleman where the papers were, and that he could get them, and that the defendants Staunton, Silman, and Jarret agreed with Coleman that they should be so placed, then, under such circumstances, the taking of such orders was not larceny; and if the jury further believe from the evidence that the plaintiff was arrested and prosecuted for such taking, then no probable cause existed for such prosecution."

These two instructions seem to us erroneous, and clearly calculated to mislead the jury, to the prejudice of the plaintiffs in error Staunton, Silman, and Jarret, in any view that may be taken of the case. In instruction No. 4, the jury were told that if the purpose of Goshorn in taking the road orders in question was to examine them to ascertain their validity, and not to destroy them, and that plaintiff in error Coleman was acquainted with such intention on his part before Goshorn came in possession of said papers, then that the arrest and prosecution of defendant in error was without probable cause, and they should so find. The instruction is fatally defective, in that

Digitized by Google

it makes no distinction between plaintiffs in error Coleman, Staunton, Silman, and Jarret, and charges Coleman's co-plaintiffs in error with knowledge of facts communicated to him alone.

The court's instruction No. 9 is subject to the same objection in part as No. 4. It leaves out of view entirely the question of whether or not plaintiffs in error Staunton, Silman, and Jarret acted in good faith in what they did, and the purpose and intent with which defendant in error, Goshorn, acted in what he did. It practically takes the case away from the jury on these two questions, and seems clearly erroneous when read in connection with court's instructions Nos. 8 and 10, which immediately precede and follow it, as follows:

"No. 8. The court instructs the jury that the county orders given in the evidence in this case having been paid off and satisfied, and having no actual value, but being simply papers filed in the clerk's office of the court, are not in law subjects of larceny."

"No. 10. The court instructs the jury that if the papers were taken as set out and described in the court's eighth instruction, and that there was no such value in the papers as would induce the plaintiff to steal them, then this fact is a potential fact, tending to show a want of probable cause."

By instruction No. 8, it will be seen that the court told the jury that these road orders were not the subject of larceny, and by the ninth instruction that if they were taken, as therein stated, the taking of them was not larceny, and that no probable cause existed for the prosecution. By court's instruction No. 10 the jury were told that if the papers were such as the court referred to in its instruction No. 8, and there was no such value in them as would induce the defendant in error to steal them, then that was a potential fact tending to show a want of probable cause.

Aside from the last-named instruction being argumentative, we think the whole theory of these three instructions,—Nos. 8, 9, and 10,—in so far as they deal with the question of the value of the road orders, and their not being the subject of larceny, was erroneous, and that they should not have been given. The action of the criminal court of Kanawha county, W. Va., on this question, of whether or not these papers were the subject of larceny, is binding upon this court in a suit for malicious prosecution, based upon the existence of that case. That court passed upon the validity of the indictment found by the grand jury against the defendant in error, overruling the demurrer thereto and to each count thereof, and expressly refused to charge the jury that said road orders were not the subject of larceny. Under that indictment defendant in error was tried. Upon a conviction thereunder by the jury, that decision, until reversed and set aside by an appellate court, would have been conclusive against the defendant therein, as it would have been conclusive in an action for malicious prosecution growing out of its institution. Such conviction, however, was not had, and the defendant in error was acquitted; but the judgment of the court is none the less binding and valid upon the questions necessarily involved in the maintenance of the indictment, to wit, that a criminal offense was charged. Such decision is entitled to full force and effect everywhere, and to be recognized in all proceedings growing out of, arising under, or dependent upon the existence of that case, and to it should be given due effect,

Digitized by Google

under the constitution and laws of the United States. The rule has respect to the court and its judgment, and not to the parties. The case was one within its jurisdiction, and it is conclusively presumed, in the absence of fraud, to have acted impartially and honestly, and its judgment, rendered under such circumstances, imports verity. Any departure from this principle would go far to destroy the integrity and value of the judicial system. Dupasseur v. Rochereau, 21 Wall. 135; Embry v. Palmer, 107 U. S. 3, 2 Sup. Ct. 25; Crescent City Live-Stock Co. v. Butchers' Union S. H. Co., 120 U. S. 146, 147, 159, 7 Sup. Ct. 472.

Several of the assignments of error involve the question of how far the fact that the plaintiffs in error Staunton, Jarret, and Silman consulted counsel before swearing out the warrant against the defendant in error, and acted upon such advice, served to relieve them from liability in this action. The court gave two instructions bearing upon this question, and rejected two offered by the plaintiffs in error; and while the exceptions and assignments of error relate to the rejection of the two instructions offered and the giving of the two by the court, the said assignments are more particularly directed at the limitation the court made in the instruction on this question as to the time when counsel was consulted than to the terms in which the instructions were couched. The court emphasized the fact that consulting counsel, after the defendant in error, Goshorn, was placed in the custody of the sheriff, and before the swearing out of the warrants against him, some hours later, would not avail as a defense, and should not be considered in determining whether probable cause existed or not at the commencement of the proceedings; and by another instruction, offered by defendant in error, the court instructed the jury "that the prosecution of the plaintiff, as alleged in the declaration, began with his arrest in the clerk's office." That the advice of reputable counsel, bona fide sought, and given upon full and fair statement of all the facts and circumstances, and as a consequence of which a prosecution was instituted, will serve as a defense in a suit for malicious prosecution, seems to be too well settled to admit of serious contention. Stewart v. Sonneborn, 98 U. S. 187; Sanders v. Palmer, 14 U. S. App. 297, 5 C. C. A. 77, and 55 Fed. 217; Forbes v. Hagman, 75 Va. 168. This is what was done in this case. The evidence is that the lawyer consulted was of very high standing, a former prosecuting attorney for the county, the father of the then prosecuting attorney, who frequently assisted his son in prosecutions, and who was himself the assistant United States attorney for the state; that plaintiffs in error Staunton, Silman, and Jarret "explained to him all the facts relative to the matter, and all the circumstances leading to Goshorn's arrest, including the plan arranged to catch him, and the information received by them from Coleman, both before and after the plan was arranged," and asked for his advice in the premises; that he advised them that Goshorn should be arrested, and drafted the warrant himself. Was this advice given too late, as held by the lower court? There was no count in the declaration for false imprisonment. The suit was one solely of malicious prosecution, and we think that the advice taken before the issuance of the warrant

Digitized by Google

was sufficient. If false imprisonment had also been charged, the rule would, of course, be different. The test is whether a suit for false imprisonment could be maintained for the arrest made in the clerk's office in this case before the issuance of the warrant. Manifestly it could. Such arrest was extrajudicial, without legal process, and it is false imprisonment, as distinguished from malicious prosecution. How. Mal. Pros. 8; Murphy v. Martin, 58 Wis. 278, 16 N. W. 603; Colter v. Lower, 35 Ind. 285; Lewin v. Uzuber, 65 Md. 341, 344, 4 Atl. 285.

Another of the assignments of error relates to the admission of evidence during the trial, as set forth in the bill of exceptions No. 2; the question being whether defendant in error, Goshorn, could prove by a witness the statements made by Goshorn to the witness on Sunday or Monday preceding the Tuesday on which the papers were taken, with regard to what was his (Goshorn's) object and purpose in procuring the papers. This evidence was admitted, and we think improperly, against the objection of the plaintiffs in error. Whether such evidence might possibly have been introduced in a criminal prosecution it is unnecessary to decide, but manifestly in this case, upon a plea of not guilty, it had no place. The issue joined was not whether defendant in error was guilty of the crime alleged against him, but whether plaintiffs in error had probable cause to believe at the time, and under the circumstances that they acted, that he was guilty. So far as they were concerned, if for no other reason, it should have been excluded as hearsay evidence. There is no pretense that the plaintiffs in error, or either of them, heard or knew anything of the statements claimed to have been made by Goshorn to the witness, and, at best, it was a self-subservient statement, made by the defendant in error, and which could not be used in his own behalf. Whart. Ev. (2d Ed.) § 1101; Tayl. Ev. § 523; Whitney v. Houghten, 127 Mass. 527; Duvall's Ex'r v. Darby, 38 Pa. St. 56; Scott v. Shelor, 28 Grat. 891, 895.

For these reasons, and without further discussing the assignments of error, the decision of the lower court is reversed, and the case remanded, with instructions to award a new trial therein. Reversed.

(94 Fed. 61.)

JUTTE & FOLEY CO. v. CITY OF ALTOONA.

(Circuit Court of Appeals, Third Circuit. May 9, 1899.)

No. 19, March Term.

MUNICIPAL CORPORATIONS — LIMITATION OF LIABILITY ON CONTRACTS — PENNSYLVANIA STATUTES.

The Pennsylvania act of May 23, 1889 (P. L. 277), provides that no municipal department of a city of the third class shall create any debt or make any contract, except in pursuance of previous authority of law or ordinance; that every contract which involves an appropriation of money shall designate the item of appropriation on which it is founded, and the estimated amount of appropriation thereunder shall be charged against such item, and so certified by the controller on the contract,

Digitized by Google

before it shall take effect; and that, if the controller shall certify any contract in excess of the appropriation made therefor, the city shall not be liable for such excess, but the controller may be held liable therefor on his bond. The act also authorizes the creation of a water and lighting department, the board of commissioners of which shall make all contracts relating to the department, but only as authorized thereto by the previous consent and direction of the councils. The councils of the city of Altoona, which is a city of the third class, passed an ordinance providing for the construction of certain improvements to the city's water plant, and directed the board of water commissioners to contract therefor. It appropriated for the purpose an unexpended balance of a fund previously created amounting to $35,000, and expressly limited the cost of the improvements to that sum. The board entered into a contract with plaintiffs for the construction of the improvements for a sum slightly under $35,000, but providing for an increase or diminution in the estimated quantities of work or materials. The controller certified the contract, in general terms, as "subject to the appropriation made" by the ordinance, but stated no amount in his certificate. *Held*, that the plaintiffs could not recover against the city on such contract any sum in excess of the $35,000 appropriated by the ordinance, being chargeable with notice of the limitations placed upon the powers of the board by the statute and the ordinance.

In Error to the Circuit Court of the United States for the Western District of Pennsylvania.

Henry A. Davis, for plaintiff in error.

W. M. Hall, Jr., and Geo. B. Bowers, for defendant in error.

Before ACHESON and DALLAS, Circuit Judges, and BRADFORD, District Judge.

ACHESON, Circuit Judge. In Pennsylvania, cities of the third class, of which the city of Altoona is one, are governed by the act of May 23, 1889 (P. L. 277). Article 4, § 7, of this act provides:

"And no municipal department shall create any debt or make any contract, except in pursuance of previous authority of law or ordinance."

Article 9, § 5, of this act, provides as follows:

"Sec. 5. Every contract involving an appropriation of money shall designate the item of appropriation on which it is founded, and the estimated amount of the expenditure thereunder shall be charged against such item and so certified by the controller on the contract before it shall take effect as a contract, and the payments required by such contract shall be made from the fund appropriated therefor. If the controller shall certify any contract in excess of the appropriation made therefor, the city shall not be liable for such excess, but the controller and his sureties shall be liable for the same; which may be recovered in an action at law by the contracting party aggrieved. It shall be the duty of the controller to certify contracts for the payment of which sufficient appropriations have been made."

By article 12 of the same act the city is authorized to create a water and lighting department. The duties of the board of commissioners of such department are defined by sections 5 and 6 of that article as follows:

"Sec. 5. It shall be the duty of the board to take charge of the water and lighting department so created as aforesaid, and by their sole authority to employ and dismiss at pleasure a superintendent and a clerk, who shall be secretary of the board, whose compensation shall be fixed by councils, and to employ such laborers, mechanics and workmen as they may deem necessary for the economical and efficient administration of said department. They

Digitized by Google

shall purchase such materials and supplies as may be required for keeping the works in good repair, and have charge and control of all constructions, repairs, enlargements and extensions of the works, and shall conduct and manage the affairs and business of the department in accordance with law and the directions of the city councils.

"Sec. 6. The said board of commissioners so created shall, whenever called upon by councils, make and submit to them full estimates of the cost, charges and expenses of any new work, enlargement, extension of water or lighting supply, or alteration which councils may contemplate making relative to said works; and said board may at any time submit to councils any suggestions and estimates they may see proper to make touching the improvement, extension or enlargement of said works, but no new construction, reconstruction, extension, supply of water or light, or enlargement of said works shall be undertaken by said commissioners so created, or materials or supplies be purchased therefor, without the previous consent and direction of councils."

On July 6, 1894, the councils of the city of Altoona, in conformity with the previous consent of the electors of the city duly expressed, passed an ordinance (No. 545) increasing the indebtedness of the city $220,000, authorizing the issue of bonds of the city therefor, and appropriating the entire amount to the purpose of "securing and furnishing an additional ample supply of pure water to the citizens and institutions of the city of Altoona," and specifically appropriating and applying $185,000 thereof to the construction of a large impounding dam or reservoir. Subsequently the contract for this reservoir was let, and the reservoir was constructed at an expenditure of $185,000, leaving $35,000 of the entire above-mentioned appropriation unused. On March 29, 1895, an ordinance (No. 593) was passed by the councils of the city of Altoona and approved by the mayor, providing for the construction of a flood channel and settling basin in connection with said reservoir. The first section ordained that the flood channel should be constructed, and the second section directed the board of water commissioners to have plans and specifications therefor prepared by their engineer. The third section ordained that a settling basin should be constructed, and the fourth section directed the board of water commissioners to have plans and specifications therefor made by their engineer. The fifth section of this ordinance is as follows:

"Sec. 5. Whatever funds are necessary to pay for the construction of said flood channel and settling basin, are hereby appropriated from the unappropriated part of the funds to be raised from the loan of two hundred and twenty thousand ($220,000) dollars, authorized by Ordinance No. 545, approved the sixth day of July, A. D. 1894, providing the construction of such flood channel and settling basin shall not exceed the sum of $35,000."

And the sixth section directed the board of water commissioners to advertise for bids for the construction of said flood channel and settling basin "in accordance with said plans and specifications and this ordinance," and to award the contract to the lowest responsible bidder; and further directed that the contract, on the part of the city, "shall be executed by the mayor and board of water commissioners, and shall be certified by the city controller according to law."

The water commissioners, professing to act "in compliance with an ordinance of councils under date of March 29, 1895," advertised for proposals for the construction of the flood channel and settling basin. The Jutte & Foley Company, the plaintiff below and in error, pro-

Digitized by Google

posed to furnish the materials and do the work for the sum of thirty-four thousand five hundred and eighty dollars ($34,580), with a provision, however, for increase or diminution in the estimated quantities of work and materials. The board of water commissioners awarded the contract to the plaintiff on its bid, and a contract in writing was executed without any report to councils or further action on the part of councils. The contract bears date May 22, 1895, and purports to be "between the city of Altoona, Pa., by its board of water commissioners, of the first part, and Jutte & Foley Company," of the second part, and it is signed by the mayor of the city and the members of the board of water commissioners, but without any official designation accompanying their signatures. The city controller indorsed upon the contract the following certificate:

"The within contract is hereby certified, subject to the appropriation made therefor in Ordinance No. 593, approved the 29th day of March, 1895.
"Altoona, Pa., June 10, 1895. George Harpham,
"City Controller."

Before the bringing of this suit, the city had paid the plaintiff on this contract a sum of money considerably in excess of $35,000, yet the plaintiff claimed to recover in this action upon the contract the further sum of about $40,000. Under the rulings and pursuant to the peremptory instruction of the circuit court, the jury rendered a verdict for the city of Altoona, the defendant, and judgment thereon was entered in its favor. We are now to determine whether there was error in these rulings and instruction.

From the above-quoted provisions of the act of May 23, 1889, it is plain that in the matter of the contract here in question the board of water commissioners had no lawful authority to bind the city of Altoona other than was conferred by the ordinance of March 29, 1895. We entirely agree with the court below that the authority given to the board of water commissioners by that ordinance was restricted to an expenditure not exceeding $35,000. A public fund of $220,000 had been raised and set apart to procure for the city a supply of water, and $185,000 of that fund had been appropriated and applied to the construction of an impounding dam or reservoir. There was thus left of this water fund an unexpended balance of $35,000. In this condition of affairs the ordinance of March 29, 1895, was passed, authorizing the construction of a flood channel and a settling basin. For this purpose the fifth section of the ordinance appropriated the "unappropriated part" of the water fund of $220,000. And then, to make it the clearer that no expenditure in excess of that unappropriated balance was contemplated or sanctioned, there was added the proviso, "providing the construction of said flood channel and settling basin shall not exceed the sum of $35,000." Manifestly this was a limitation upon the cost of the work. This limitation bound the board of water commissioners and the contractor dealing with the board. The ordinance did not empower the board of water commissioners to enter into a contract involving the city in a liability in excess of $35,000. If authority is needed to sustain the conclusion that the city is not liable to the contractor beyond the limited cost specified in the ordinance, it is to be found in the de-

Digitized by Google

cisions of the supreme court of Pennsylvania in the cases of Lehigh Co. v. Kleckner, 5 Watts & S. 181, and Hague v. City of Philadelphia, 48 Pa. St. 527.

Again, the certificate of the city controller prescribed by section 5 of article 9 of the act of May 23, 1889, was requisite to the validity of the contract in suit. City of Erie v. A Piece of Land on Eighteenth Street, 176 Pa. St. 478, 484, 35 Atl. 136. This section provides:

"Every contract involving an appropriation of money shall designate the item of appropriation on which it is founded, and the estimated amount of the expenditure thereunder shall be charged against such item and so certified by the controller on the contract before it shall take effect as a contract, and the payments required by such contract shall be made from the fund appropriated therefor."

This certificate by the controller is a condition precedent to the taking effect of the contract. This was so adjudged in City of Erie v. A Piece of Land on Eighteenth Street, supra. In the present case the certificate by the controller does not conform to the requirements of the act. Certainly, if it can be sustained at all, it is only good to the extent of the appropriation made by the ordinance. The language of the certificate is:

"The within contract is hereby certified, subject to the appropriation made therefor in Ordinance No. 593, approved the 29th day of March, 1895."

Now, the appropriation made was the unappropriated part of the water fund, namely, the sum of $35,000. It is to be noted that section 5 of article 9 provides:

"If the controller shall certify any contract in excess of the appropriation made therefor the city shall not be liable for such excess, but the controller and his sureties shall be liable for the same."

Possibly the certificate of the controller may be regarded as good to the extent of the unexpended balance of $35,000 of the water fund. We are clear, however, that beyond that sum there was no proper certification, and therefore no valid contract with the city.

From the views we have expressed above, it follows that the obstacles to the plaintiff's recovery were insuperable, and therefore that there was no error in the rulings of the court upon the plaintiff's offers of evidence. The court was right in instructing the jury to return a verdict for the defendant. The judgment of the circuit court is affirmed.

(94 Fed. 65.)

CITY OF PONTIAC v. TALBOT PAV. CO.

(Circuit Court of Appeals, Seventh Circuit. May 19, 1899.)

No. 563.

1. REVIEW—CASES TRIED TO COURT—EFFECT OF GENERAL FINDING.

The sufficiency of a declaration is reviewable on error by the circuit court of appeals, and, if it fails to state a cause of action, the defect is not cured by a general finding for plaintiff by the circuit court, where a jury is waived, nor is it waived by the defendant by answering and proceeding to trial after his demurrer has been overruled.

Digitized by Google

2. MUNICIPAL CORPORATIONS—LIABILITY ON CONTRACT FOR PUBLIC IMPROVEMENTS—ILLINOIS STATUTE.

A contractor for the making of public improvements in an Illinois city, governed by the city and village act (1 Starr & C. Ann. St. [2d Ed.] 777 et seq.), which provides (article 9, § 49) that all persons taking such contracts, who agree to be paid from special assessments, "shall have no claim or lien upon the city or village in any event, except from the collection of the special assessment made for the work contracted for," and whose contract provided that he should make no claim against the city in any event, except from collections, and should take all risk of the invalidity of the special tax, cannot maintain an action against the city for a general judgment on the ground that its officers failed or refused to levy a second assessment after the first had been held invalid by the supreme court of the state, but is confined to his remedy to compel the officers to perform their duty.

In Error to the Circuit Court of the United States for the Southern Division of the Northern District of Illinois.

Judgment is entered against the city of Pontiac, plaintiff in error and defendant below, in an action on the case, upon a general finding by the court that the defendant is guilty, and that plaintiff's damages are assessed at the sum of $12,343; a trial by jury being waived. The alleged cause of action, as set out in the several counts of the declaration, is failure and neglect on the part of the municipal authorities to provide "for a new special tax assessment" against contiguous property, to pay amounts earned under a contract for the paving and improvement of certain streets under the following state of facts: On June 27, 1895, an ordinance was adopted by the city of Pontiac for the improvement of certain streets, whereby the expense of street intersections was to be paid by general taxation, and "the remainder of cost of said improvement should be paid for by special taxation, to be assessed, levied, and collected against real estate abutting on the lines of said streets so ordered to be improved," in accordance with the provisions of article 9 of chapter 24 of the statute of the state of Illinois entitled "An act to provide for the incorporation of cities and villages." The general act so referred to declares, by section 49 of article 9 (1 Starr & C. Ann. St. Ill. [2d Ed.] p. 777 et seq.), that "all persons taking any contract with the city or village, and who agree to be paid from special assessments, shall have no claim or lien upon the city or village in any event, except from the collection of the special assessment made for the work contracted for." Section 64 of the same article provides that vouchers issued for the work shall be subject to like condition, whether the holders are the original contractors or their assigns. Proceedings were taken under the ordinance, the special tax assessments were made and confirmed, and thereupon a contract was entered into between Talbot Paving Company, the plaintiff below, and the city of Pontiac, whereby that company, as the lowest bidder, undertook to "furnish all labor and material for the construction of said local improvement" for the aggregate sum of $15,168.90, to be paid when completed and accepted,—"and when the special tax levied under said ordinance, or any special tax which shall thereafter be levied by said city, upon the property contiguous to said improvement, should be collected," and also when the general tax provided for the cost of street intersections was collected; and the contract further provides, in express terms, that "they shall make no claims against said city, in any event, except from the collections" so referred to, and that the contractors "take all risk of the invalidity of any such special tax." The work was performed by the contractor and accepted by the city, but payment was not made, except for the cost of the intersections, raised by general tax, and portions of the special assessments which were paid in by certain property owners. The balance thus left unpaid was $10,567.33, for which "local-improvement vouchers" were issued, reciting that they were to be paid out of the special assessments when collected, and that the city was exempt from other liability. The declaration states that the failure to collect the special taxes in the first instance arose out of the prosecution by lot owners of an appeal to the supreme court of the state, which resulted in a judgment "holding the said ordinance providing for said special

Digitized by Google

tax assessment invalid, thereby rendering it impossible, under said ordinance, to collect said special tax from said property to pay the balance due the plaintiff." Bradford v. City of Pontiac, 165 Ill. 612, 46 N. E. 794, is cited in the briefs as the case so referred to. After this decision, the Talbot Paving Company presented its petition to the city council for the adoption of a supplemental ordinance "for the assessment of a special tax upon the property contiguous to said improvement" to pay the balance due, but the city council failed to make provision to that end, and the action rests upon the allegation of negligence and willful refusal on that behalf. The defendant demurred to the declaration, stating several grounds, but the demurrer was overruled, and the defendant, being required to plead instanter, filed its plea of not guilty, and trial before the court proceeded upon the merits.

F. W. Winkler and A. C. Norton, for plaintiff in error.

W. T. Whiting, for defendant in error.

Before WOODS and JENKINS, Circuit Judges, and SEAMAN, District Judge.

SEAMAN, District Judge, after making the foregoing statement, delivered the opinion of the court.

The general finding by the court clearly determines all issues of fact. Fourth Nat. Bank of St. Louis v. City of Belleville, 53 U. S. App. 628, 27 C. C. A. 674, 83 Fed. 675, and cases cited. But it is not conclusive on all the questions involved, as contended on behalf of the defendant in error. Its utmost effect is to limit the inquiry on review "to the sufficiency of the declaration, and the rulings, if any be preserved, on questions of law arising during the trial." Lehnen v. Dickson, 148 U. S. 71, 72, 13 Sup. Ct. 481. In the case of general verdict on a trial by jury, the finding establishes all the material facts which are alleged in the declaration. If, however, the declaration on which either verdict or finding must rest "fails to state a cause of action, and clearly shows that upon the case as stated the plaintiff cannot recover," the error is not cured by verdict, and is not waived by answering and proceeding to trial after the demurrer is overruled. Teal v. Walker, 111 U. S. 242, 246, 4 Sup. Ct. 420. In such case, there is no foundation for the judgment, and that inquiry is clearly presented for review on this record. Whether considered as raised by the demurrer, or upon the objections and exceptions covering all the testimony to support the declaration, or upon the facts stated and found, is not material.

The defendant in error entered upon the performance of its contract for the street improvement under the express statutory provision that payment could be made solely out of special assessments against property abutting on the improvement, and that the contractor should "have no lien or claim upon the city * * * in any event, except from the collection of the special assessments made for the work contracted for." The ordinance by which the paving in question was authorized and let expressly referred to this statute; this condition of payment was clearly stipulated both in the contract and in the vouchers, which were finally issued and accepted for the unpaid installments in controversy; and the contract further provided that the contractor "shall take all risk of the invalidity of any such special tax, the said city not to be liable in any event by reason of the invalidity of said special tax assessment, or any of them, or of

Digitized by Google

the proceedings thereon, but only for failure to collect the same, the same being collectible in law." Proceedings were taken, and the special assessments were made, but on appeal by lot owners it was held by the supreme court that the ordinance was invalid by reason of provisions which committed to the city engineer an unauthorized discretion relative to the improvement, and the assessments were set aside. As the necessary result of this adjudication, which involved the entire amount unpaid on the contract, the assessments were not collected and the vouchers were not paid. The city council has since refused to take action for a new special assessment to charge the deficiency against the abutting property; and it is urged, in defense of such nonaction, that its power is exhausted, and that no such assessment can be made, under the decision referred to. Whether the power subsisted in the city council to provide for a reassessment notwithstanding the defect in the original ordinance appears to have been the main subject of controversy in the trial court; and, for the purposes of the present inquiry, it is assumed that the decision there in favor of the power is not only in accord with justice, but is sustained as well by interpretations placed upon the statute by the supreme court. On that assumption, the duty of the city is manifest to proceed promptly in the exercise of its power to assess and collect the unpaid amounts, and such duty can be enforced by mandamus, if remedies at law are not adequate for the adjustment of all rights.

The statute which confers authority for making the improvement in question imperatively requires that the expense, aside from street intersections, shall be borne by the abutting property, through special assessment, and shall not become a public charge "in any event." The provision is of general application to cities and villages in the state of Illinois, and is in accord with a rule of public policy which is common in municipal charters and is upheld by judicial authority. If, however, the contractor who performs work so authorized, has the right to recover the contract price against the municipality, by way of damages, in the event of neglect or refusal on the part of the public officers to perform their duty in enforcing the special assessments, the way is clearly open to evade and nullify the legislative purpose. By their conduct,—either through negligence, ignorance, or collusion,—the city council or officers may impose upon the public the expense of the improvement, in despite of the statute which declares it a special benefit, to be paid exclusively by abutting lot owners. Indeed, if this judgment is sustainable, it so operates in the present case, as no provision appears for collecting the amount of such recovery by a supplemental special assessment against the lot owners. On the other hand, a complete remedy is clearly open to the contractor, by a proceeding in the proper forum, to ascertain the power, and thereupon enforce the ministerial duty to make the new assessment in obedience to the statute and violating none of its provisions.

The contention, however, on behalf of the defendant in error, is predicated on the duty which is imposed by law upon the municipality to make provision for the special assessment, and on the gen-

Digitized by Google

eral doctrine, held in a line of authorities and well recognized in Illinois, of municipal liability for failure or neglect on the part of its officers to discharge the public duty. The question whether this doctrine applies to any case "where the expense of making a local improvement is not to be raised by a general tax, but solely upon the property benefited," to the extent of furnishing the contractor a right to recover his compensation in an action against the corporation founded on its failure to make the necessary assessment, has given rise to decisions which are not in accord in the various jurisdictions. In 1 Dill. Mun. Corp. (4th Ed.) § 482, numerous cases are collated in a note, and the learned author well remarks in the text: "The right to a general judgment should, in our opinion, be limited, in any event, to cases where the corporation can afterwards reimburse itself by an assessment; for why should all be taxed for the failure of the council to do its duty in a case where the contractor has a plain remedy, by mandamus, to compel the council to make the necessary assessment, and proceed in the collection thereof with the requisite diligence." But examination of the cases there noted as favoring the general recovery, and as well those cited in the brief of counsel in support of this judgment, reveals no instance of such allowance in the face of a statute expressly prohibiting the payment or collection as a public charge in any event, and the extreme view of liability held in the two leading citations (Reilly v. City of Albany, 112 N. Y. 30, 42, 19 N. E. 508, and Commercial Nat. Bank v. City of Portland, 24 Or. 188, 33 Pac. 532) would merely disregard the contract stipulations, and not affect a case so limited by statute. In People v. City of Syracuse, 144 N. Y. 63, 66, 38 N. E. 1006, the New York court of appeals appears to disapprove the doctrine of Reilly v. City of Albany, supra, holding that no action is maintainable against the city, even in such case, for the failure to make an assessment, but the "proper remedy was to compel, by mandamus, the officers of the city having the matter in charge to proceed with their duties as required by law."

However the concensus or weight of authority shall ultimately determine the remedy of the contractor for local improvements, where the statute authorizes payment by special assessment, but is merely directory in its terms to that end, or where the collection is limited by ordinance or contract to such assessments, and the authorities fail to provide for or to carry out the assessment, we are clearly of opinion that no general doctrine of municipal liability for mere nonfeasance in the failure or neglect of council or officers to perform a duty of the municipality can be extended to override per se the inhibitions expressed in this statute, and that the contractor must proceed by mandamus to enforce his claim. The decisions in support of this view are well considered, and apparently without conflict, and the following are leading and pertinent examples: Fletcher v. City of Oshkosh, 18 Wis. 228; City of Greencastle v. Allen, 43 Ind. 347; Goodrich v. City of Detroit, 12 Mich. 279; Reock v. Mayor, etc., of Newark, 33 N. J. Law, 129; People v. City of Syracuse, 144 N. Y. 63, 38 N. E. 1006. See, also, Elliott, Roads & S. 436, and note; Beach, Mod. Cont. § 1191. In Fletcher v. City of Oshkosh, supra, Mr. Justice

Digitized by Google

Paine, speaking for the court in reference to a case which is practically identical, says:

"Now, in the face of this provision, which says that the city shall in no event be liable, we are asked to hold that if the money is not collected in a reasonable time, in the mode which is provided, the city shall be liable. * * * We know of no rule of construction, and certainly the counsel cited no case, that could justify a court in thus overriding a plain provision of law. Whoever contracts for this kind of work, or deals in these certificates, under such a charter, takes the risk of collecting his money in the manner provided, with a right to resort to the appropriate remedy to compel the officers to whom it is intrusted to discharge their duties, and he cannot come into a court and ask to hold the city liable, in the teeth of a provision which informed him at the outset that the city should, in no event, be liable."

So considered, support cannot be found for the judgment under the general authorities, and no foundation remains unless the cases cited by counsel sustain the further contention that a rule of decision prevails in the state of Illinois which establishes the primary liability of the municipality in such contingency through the failure to make the special assessment. The decisions invoked in that view are Clayburgh v. City of Chicago, 25 Ill. 535, and Foster v. City of Alton, 173 Ill. 587, 51 N. E. 76; but in the first-mentioned case no statute was involved which forbade liability in any event on the part of the city, and in neither case was any rule of liability adopted which can be brought into the present statute, by way of construction, to sanction an inhibited recovery. In Clayburgh v. City of Chicago, 25 Ill. 535, the question was of a different nature, and not within the statute. An action on the case was sustained in favor of a lot owner to recover of the city damages arising out of the taking of his property for public use in opening a street. The law provided for an assessment of benefits and damages to that end, the property was appropriated and the damages ascertained, but there was a refusal to enforce collection of the assessment. The terms of the statute are not stated, but, clearly, the remedy for compensation in such a case is not applicable, in any view, to a contractor, under the present statute. In Foster v. City of Alton, 173 Ill. 587, 51 N. E. 76, however, the same statute and like conditions as in the case at bar were present, except that suit was commenced by the contractor after he had petitioned for a reassessment, and before an ordinance could be adopted for that purpose; the action being based on the ground that the city "had exhausted its power, and could not make a reassessment, as it had agreed to do, and that it was therefore liable for the balance, to be paid by general taxation or out of the general fund." The decision of the supreme court denies the right of action, and is based solely upon the ground that a reassessment could be made for the collection; and, so far as it furnishes light, the ruling is distinctly adverse to recovery here, and appears to have been misapprehended by counsel. It is cited in the argument submitted on behalf of the defendant in error as stating in the opinion of the court: "This action cannot be maintained except upon refusal or neglect of appellant to levy a reassessment, which is not claimed." This remark appears in the recital of facts only, and as a quotation from the findings of the appellate court of a reason for not remanding the cause.

Digitized by Google

It is neither approved in the opinion, nor referred to as influencing the decision; nor could the excerpt have the force of a binding decision, if it were approved. No ground appearing to authorize the recovery against the plaintiff in error, the judgment is reversed, with direction to sustain the demurrer to the declaration.

(94 Fed. 73.)

DETROIT CRUDE-OIL CO. v. GRABLE.

(Circuit Court of Appeals, Sixth Circuit. March 31, 1899.)

No. 623.

1. TRIAL—DIRECTION OF VERDICT—WAIVER OF ERROR.
   Error in refusing to direct a verdict for defendant, on his motion, at the close of plaintiff's evidence, is waived, where defendant proceeds with the case, and gives evidence on his part.
2. SAME—RIGHT TO HAVE VERDICT DIRECTED.
   Refusal to direct a verdict for defendant at close of plaintiff's case can not be assigned as error.
3. SAME—MOTION—REQUEST FOR INSTRUCTIONS.
   A request for a charge that, under the evidence, the verdict must be for defendant, is equivalent to a motion to direct a verdict.
4. SAME—AUTHORITY TO DIRECT VERDICT.
   Where the trial judge is satisfied, upon the evidence, that plaintiff is not entitled to recover, and that a verdict, if rendered for plaintiff, should be set aside, the jury may be directed to find for defendant.
5. MASTER AND SERVANT—ASSUMPTION OF RISK—MACHINERY.
   The rim of a fly wheel was fastened on by bolts that projected towards the engine from 1½ to 3 inches. Between the wheel and the engine block there was a water-pipe line connected with the engine pump. This line was only a half inch from the longest projecting bolt, and when the pump was in operation it vibrated. *Held*, that an engineer accepting employment under such conditions, and remaining in service without reliance on any promise of the master to remove the cause of danger, assumed the risk of the bolts catching the pipe and breaking it, and throwing part of it against him, although he did not anticipate that such an event might result from the situation of things.
6. SAME—PROMISE TO REPAIR DEFECTS.
   A master is liable for an injury to a servant, resulting from an obvious defect and known danger, where the servant relied on an express or implied promise by the master to make repairs, for such time as would be reasonably required to repair the defect, but no longer; and, in the event of an injury during such time, the servant could recover therefor.
7. SAME—KNOWLEDGE OF DEFECT.
   Where the knowledge and the means of knowledge of the servant in respect to a patent defect are equal or superior to those of the master, the servant cannot recover for injuries resulting from such defect, where there is no question of the intricate character of the machinery or the imperfect intelligence of the servant involved.

In Error to the Circuit Court of the United States for the Western Division of the Northern District of Ohio.

This suit was instituted in the court of common pleas of Wood county, Ohio, and removed, on application of plaintiff in error, into the circuit court of the United States for the Western division of the Northern district of Ohio. The plaintiff in error is a corporation engaged in the business of leasing lands and sinking and working oil wells thereon. The action was brought to re

Digitized by Google

cover damages for a personal injury sustained by the defendant in error while in the service of the plaintiff in error. He was employed in June, 1895, and continued in the same work until October 23, 1896, when the injury was received,—a period of 14 months. During this entire time the defendant in error was engaged in operating, and had charge of, an engine used in pumping oil from oil wells; the engine in question being at well No. 9. He was 26 years old, and was an experienced engineer; having worked (though not continuously) as engineer for about 12 years. He says he considered himself qualified to properly operate such an engine as he was handling. Such minor repairs as were needed from time to time were made by him. The engine was situated in an engine house, and this, with all the machinery connected with it, was, at the time of the accident, in the same condition as when the defendant in error entered into the service of the master, and had been in such condition during the entire time of his service. What is called the "fly wheel" had a balance or outer rim, attached to it with bolts, which extended through, beyond the outer rim of the wheel, towards the engine block. There were three of such bolts, varying in length from 1½ to 3 inches, all projecting, as stated, beyond the rim of the wheel, and towards the engine block. Between this fly wheel and the engine block there was a water-pipe line, placed along the floor, and extending from a well in the rear of the engine house between the engine block and the fly wheel, connecting with what is called a "union," and extending from that union to the pump; being screwed into the water pump at the engine head. Two or three days previous to the accident, the engineer had himself uncoupled this water-pipe line at the union, for some purpose, and coupled it up again. This line was so placed that it extended along close to the fly wheel, and, as exact measurements made after the accident showed, was within about half an inch of the longest projecting bolt of the outer rim of the fly wheel when revolving. The proof also showed that, when the pump was working, this water pipe would vibrate, though this vibration was very slight, if at all, in a lateral direction. Just how the accident happened was a disputed question, and was left in some uncertainty by the evidence. The theory of the defendant in error was and is that, the machinery being in operation, the projecting bolts on the outer rim of the fly wheel caught this pipe, jerked it loose from its fastenings, breaking it, and that a part of it, thrown by the fly wheel, struck the plaintiff. His jaw was broken in two places, and a severe injury sustained. The pipe was undoubtedly found uncoupled at the union after the accident, and a part of it wound around the shaft; indicating that it had been, by great force, driven out of place and broken. What the defendant in error knows or says in regard to the manner in which the accident happened may be stated in his own language as follows: "Well, I went to my place at noon to start up, and pump there in the afternoon; and I fired up, and got up steam on the boiler, and turned it down to the engine, and went down and started my engine. Well, I left the top pet cock open, always, to see when it started; and the pump started off in good shape; and I shut that up, and started around; and the steam was coming up, and the engine was running a little faster than I wanted it to, and I took hold of the throttle and checked the engine down; and, just as I took my hand off the throttle, it hit me, and— The Court: What hit you? A. The water line. * * * Q. Do you know how you were injured? A. Well, I know I was injured while I was standing right at the engine, even with the throttle wheel. I was checking the engine down. I did not notice any displacement of any portion of the water-line pipe, or balance of the machinery. I was starting the pump. It was twelve o'clock when I got there, and I fired up the boilers, and the water was low, and I got up steam. The engine was running a little faster than I wanted it to run, and I started around to check it down; and, just as I took my hand off, something happened, and struck me. It was done so quick I couldn't see. Q. Did you know yourself what had happened? A. I could not say, exactly." The foregoing, taken from different parts of his testimony, is practically all that is said by him upon this subject.

Everything connected with the fly wheel and the water-pipe line, and their situation with reference to each other, were, as the defendant in error admits, entirely familiar to him, and had been during the time he had been in the

Digitized by Google

master's service. He says he called the attention of the superintendent of the company to the danger of the projecting bolts on two different occasions,—first, when, or very soon after, he entered upon this particular work, and also at a subsequent time, when he received an injury in the finger from the projecting bolts. He does not fix, or undertake to fix, the date of the second conversation, otherwise than to say that it was at the time of the injury to the finger. The superintendent, Modisette, does, however, fix the date of this conversation definitely, as being in January, 1896, but denies any previous conversation upon the same subject as testified to by defendant in error. The defendant in error says that he requested the superintendent to furnish suitable bolts for fastening the outer rim or balance wheel to the fly wheel, and further says there are bolts, made for that purpose, which would not project, and that the superintendent promised to get other bolts; while the superintendent says he told him that the balance wheel held in place by these bolts should be removed, as it was of no use there any way. There is therefore no conflict as to the time when the last conversation on the subject occurred. In the first conversation the servant claims to have had with the superintendent, he says he mentioned the danger of the bolts on the wheel catching in his clothes and hurting him while the wheel was in motion, and when his finger was subsequently injured that fact was mentioned. Nothing was ever said in regard to the proximity of the water-line pipe to the bolts on the fly wheel when in motion. He undertakes to say he did not think of the danger of the bolts striking the pipe line, and causing such an accident as the one which actually happened, agreeably to his theory of the case.

At the close of the whole evidence, the court overruled a motion to direct a verdict for defendant. The defendant also requested the court to charge the jury that their verdict must be for the defendant; this being in effect a motion to direct a verdict, though not put in that form. Various other special instructions were requested and refused, and certain exceptions taken to the court's charge to the jury. The trial resulted in a verdict and judgment in plaintiff's favor for $1,200, and the case is now before this court on writ of error sued out to review that judgment.

Geo. W. Radford, for plaintiff in error.
Harvey Scribner, for defendant in error.

Before TAFT and LURTON, Circuit Judges, and CLARK, District Judge.

CLARK, District Judge, after stating the case, delivered the opinion of the court.

The refusal of the court, on defendant's motion at the close of the plaintiff's evidence, to direct a verdict for the defendant, is assigned for error, although apparently not relied on in the printed brief. After the motion was overruled the defendant proceeded with the case, and gave evidence on its part, and thereby waived any exception to a denial of this motion. Railway Co. v. Daniels, 152 U. S. 684, 14 Sup. Ct. 756; Runkle v. Burnham, 153 U. S. 216, 14 Sup. Ct. 837; Wilson v. Live-Stock Co., 153 U. S. 39, 14 Sup. Ct. 768. Moreover, the refusal to direct a verdict for the defendant at the close of the plaintiff's evidence, and when the defendant has not rested his case, cannot be assigned for error in this court. Railroad Co. v. Hawthorne, 144 U. S. 202, 12 Sup. Ct. 591. The court also denied the defendant's motion at the close of the whole evidence to direct a verdict for the defendant, to which exception was duly taken; and, although the argument in this court has been directed mainly to the court's action in that respect, yet, curiously enough, the court's refusal to grant the motion is not specifically assigned for error. The court also refused

Digitized by Google

the defendant's first request, which was in this language: "Under the evidence in this case, the verdict of the jury must be for the defendant." This request must be regarded as in all respects equivalent to a motion to direct a verdict, for it could have no other purpose or meaning, and we accordingly so treat it.

The first question with which we deal, then, is raised by the court's refusal to grant defendant's request to direct a verdict; for this is assigned for error. In determining this question, we take it for granted (but without deciding) that the accident was caused and the injury resulted as the defendant in error insists. The rim was bolted to the fly wheel to correct a loss of balance after it had been in operation, and presumably after the water-line pipe had been put down. In this view, the negligence would be in placing in position and leaving the projecting bolts, which were dangerously near the line pipe when the fly wheel was in rapid motion. Accordingly the bolts are chiefly complained of as causing the accident. But it is not material whether the accident must be attributed to the projecting bolts, or the position in which the line pipe was suffered to remain after the bolts were attached, or to both. The existing situation was, as we have stated, just as it had been when the servant entered upon the particular employment, 14 months before. The projecting bolts, the position of the line pipe in relation to the fly wheel, such vibration as there was in the water line with the engine working and the wheel revolving, were conditions well known to the servant, as he admits. He was an experienced engineer. The defects and conditions were patently obvious, and the danger apparent to one of ordinary intelligence, and still more to a person of this servant's skill, experience, and long familiarity with this situation and machinery. The rules applicable to the relation of master and servant, so far as they affect the question now to be determined, may be briefly stated. The well-understood general rule is that the master is bound to use due and reasonable care to furnish the servant with a safe place to work, and with safe and sound machinery, appliances, and instrumentalities for use in the service. The servant, on his part, assumes the ordinary risks of the business upon which he enters, so far as the risks are known to him, or should be known by a person of ordinary capacity in the exercise of reasonable care; and this, whether the business is a dangerous one or not. And, notwithstanding the general rule requiring the master to furnish a safe working place and safe instrumentalities, the servant, in addition to the ordinary perils incident to the business, assumes the risks arising from obvious, patent defects in the things which he uses, and which are known, or should be known, to him. Bunt v. Mining Co., 138 U. S. 483, 11 Sup. Ct. 464; Southern Pac. Co. v. Seley, 152 U. S. 145, 14 Sup. Ct. 530; Kohn v. McNulta, 147 U. S. 238, 13 Sup. Ct. 298; Tuttle v. Railway Co., 122 U. S. 189, 7 Sup. Ct. 1166; Dillon v. Railway Co., 3 Dill. 319, 7 Fed. Cas. 718 (No. 3,916); Southern Pac. Co. v. Johnson, 16 C. C. A. 317, 69 Fed. 559; Railway Co. v. Rogers, 6 C. C. A. 403, 57 Fed. 378; Shear. & R. Neg. (5th Ed.) § 185; Whart. Neg. § 214; Smith, Neg. (Whittaker's Ed.) 133, 396; 14 Am. & Eng. Enc. Law, 845, 853, and illustrative cases.

Digitized by Google

In the very late case of Railway Co. v. Archibald, 170 U. S. 673 18 Sup. Ct. 777, the supreme court of the United States approved the rule as declared in Davidson v. Cornell, 132 N. Y. 228, 30 N. E 573, in the following language:

"It is, as a general rule, true that a servant entering into employment which is hazardous assumes the usual risks of the service, and those which are apparent to ordinary observation; and, when he accepts or continues in the service with knowledge of the character of structures from which injury may be apprehended, he also assumes the hazards incident to the situation."

In Mining Co. v. Davis, 90 Tenn. 711, 18 S. W. 387, the deceased was engaged in firing a ventilation furnace in a coal mine, and was suffocated by smoke, caused by the burning of certain wooden buildings, viz. an engine house, oil house, and shed, situated at and near the entrance of the main entry to the mine. The entry was the intake air passage for the mine. The furnace was situated 150 feet from the terminus of the entry, which was the only way of escape from the furnace. The deceased servant exercised general supervision over the entry and buildings, and had entered upon the employment with full knowledge of the situation. It was adjudged that the company was not liable for the servant's death, upon the assumption that the buildings were negligently located and improperly constructed; it appearing that such buildings were in use by well-regulated companies. The supreme court of Tennessee, speaking through Judge Lurton (now one of the circuit judges of this court), after disposing of other points in the case, said:

"But, aside from all this, Davis was an old miner, thoroughly acquainted with this mine, and aware of the character and location of these buildings. With all his experience and knowledge, he must be taken to have willingly engaged in the service of this company, and to have taken upon himself the risks incident to these buildings. Being in charge of the ventilation of this mine, he was peculiarly aware of the effect of an intake of smoke resulting from the burning of these buildings. He was necessarily aware that the smoke would only reach him after permeating and filling all the passages and chambers of the mine and that his escape would be then cut off. This danger, while a slight one, was, in the nature of things, more apparent to him than any other servant of the company. His honor properly charged the jury upon the effect of his knowledge, and we must assume that the judgment is not predicated upon any negligence in this regard."

See, to the same effect, Railroad Co. v. Handman, 13 Lea, 425; Railroad Co. v. Gower, 85 Tenn. 465, 3 S. W. 824; Crown v. Orr, 140 N. Y. 450, 35 N. E. 648; Kennedy v. Railway Co., 145 N. Y. 288, 39 N. E. 956.

An exception to the rule of exemption or immunity of the master from liability under such circumstances arises when the master expressly or impliedly promises or assures the servant that the defect shall be remedied, or the danger removed. During the running of such a promise, the servant may rely upon the master's promise or assurance, and recover in case of an accident resulting from the defect, although obvious, if the claim to damage is otherwise good. This liability of the master in consequence of a promise or assurance continues only for such period of time as might reasonably be allowed or required to remedy the defect or for removal of the danger. "After the prescribed period has elapsed without change

Digitized by Google

or if the master has refused to remedy the defect, the servant cannot rely upon his expectation of a remedy as an excuse for remaining, whatever rights he may have upon other grounds; and in many cases it has been held that he 'assumed the risk.'" Shear. & R. Neg. § 215. Substantially the same rule was declared in Hough v. Railway Co., 100 U. S. 225. In Smith, Neg. (Whittaker's Ed.) p. 136, what may be regarded as the English rule is thus declared:

"If the master has expressly or impliedly promised to repair a defect, then, if an accident happens while such promise is running, the servant can recover; or, if the servant continues in the service in the reasonable expectation that the repairs will be effected, he can recover. If the promise is not performed in a reasonable time, and the servant continues in the employment, an inference arises of new terms having been agreed upon, and the servant cannot recover. The reason of this is said to be (Clarke v. Holmes, 7 Hurl. & N. 937) that there is contributory negligence on the part of the servant; but it is suggested in Shear. & R. Neg. § 97, that the true ground is that the servant has waived the objection, and induced the master to suppose that it is waived, or, as we are inclined to say, the servant has renewed the service, accepting the risk."

In Whart. Neg. § 220, the doctrine upon the subject is thus laid down:

"It has been further argued that a servant does not, by remaining in his master's employ with knowledge of defects in machinery he is obliged to use, assume the risks attendant on the use of such machinery, if he has notified the employer of such defects, or protested against them, in such a way as to induce a confidence that they will be remedied; such confidence being based on the master's engagements, either express or implied. The only ground on which the exception before us can be justified is that in the ordinary course of events the employé, supposing the employer has righted matters, goes on with his work without noticing the continuance of the defect. But this reasoning does not apply, as we have seen, to cases where the employé sees that the defect has not been remedied, and yet intelligently and deliberately continues to expose himself to it. In such case, on the principles heretofore announced, the employer's liability in this form of action ceases. He may be liable for breach of promise, but the casual connection between his negligence and the injury is broken by the intermediate voluntary assumption of the risk by the employé."

In Gowen v. Harley, 12 U. S. App. 574, 6 C. C. A. 190, and 56 Fed. 973, the circuit court of appeals for the Eighth circuit, through Sanborn, Circuit Judge, declared the general rule and the exception in language as follows:

"A person who is of age, and of ordinary capacity, assumes the usual risks and dangers of the employment upon which he enters, so far as they are known to him, and so far as they would have been known to a reasonably prudent person, under like circumstances, by the exercise of ordinary care and foresight. One of the usual risks he thus assumes is the danger from the negligence of a fellow servant who is engaged with him in a common employment in the service of the same master. Railroad Co. v. Baugh, 13 Sup. Ct. 914. To the last rule there is this exception: If a servant, who is aware of a defect in the instruments with which he is furnished, notifies the master of such defect, and is induced, by the promise of the latter to remedy it, to remain in the service, he does not thereafter assume the risk from such defect, until after the master has had a reasonable time to repair it, unless the defect renders the service so imminently dangerous that no prudent person would continue in it. Hough v. Railway Co., 100 U. S. 213, 225; Railroad Co. v. Young, 1 C. C. A. 428, 49 Fed. 723; Greene v. Railway Co., 31 Minn. 248, 17 N. W. 378; Railway Co. v. Watson, 114 Ind. 20, 27, 14 N. E. 721, and 15 N. E. 824."

Digitized by Google

See, also, District of Columbia v. McElligott, 117 U. S. 621, 6 Sup. Ct. 884; Parody v. Railway Co., 15 Fed. 205; 14 Am. & Eng. Enc. Law, 815, and cases there cited.

Among recent cases in accord with those already cited, as to the effect of a promise to repair, and the exception created during the running of such a promise, we may mention the following: Oil Co. v. Helmick, 148 Ind. 459, 47 N. E. 14; Carriage Co. v. Potter (Ind. Sup.) 52 N. E. 209; Trotter v. Furniture Co., 47 S. W. 425, 101 Tenn. 380; Donley v. Dougherty, 174 Ill. 582, 51 N. E. 714; Steel Co. v. Mann, 170 Ill. 200, 48 N. E. 417.

In view of the undisputed facts of this case, and the established rules applicable to such facts, the proper disposition of this question would seem to require no elaborate discussion. There is obviously no special ground in this case on which to base or claim an exception to the general rule under which the risk of a patent defect is assumed. The interval of time between the date when the servant claims assurance was given that the projecting bolts would be removed and date of the accident was such that there could clearly be no claim to an exception on that ground. Indeed, plaintiff's counsel do not insist that there is. On the contrary, it is conceded, or, if not conceded, it is too evident to be denied, that the case is not within the exception created by a promise to repair. The contention by which it is sought to sustain the judgment of the court below is that the servant "did not anticipate being hurt in the way he was." It is said that the danger of this character of accident was not anticipated, and the risk of it not, therefore, assumed. It is not insisted that the servant could recover for injury received by his clothes being caught by the bolts on the revolving wheel; being aware of that danger, and having complained of it to the master. But, the position of the water-line pipe and the revolving wheel being visible and patent, such danger as existed on account of this situation was just as obvious to, and as easily comprehended by, the servant as the master. The duties of the servant brought him in daily contact with the machinery, and furnished him a constant opportunity to inspect the same. His means of knowledge were evidently superior to those of the master. Notwithstanding that the defect was open, patent, and constant, and the servant's means of knowledge not only equal, but superior, to those of the master, defendant in error is forced into the dilemma of maintaining that the danger of such a defect was one which the master was bound to anticipate, while the servant was not. This contention is evidently unsound, as will be recognized upon its simple statement, without more. The servant was a mature man, and a skilled engineer, whose duty brought the patent conditions and dangers constantly under his notice, and during a long service. Under such circumstances, if the servant is not bound to anticipate and appreciate the danger, no grounds can be suggested on which the master is required to do so. If the knowledge and means of knowledge of the servant in respect to a patent defect are equal or superior to those of the master, there can be no recovery,—certainly so in the ordinary

Digitized by Google

case. Railroad Co. v. Handman, 13 Lea, 430; Ogden v. Rummens, 3 Fost. & F. 751; Dynen v. Leach, 26 Law J. Exch. 221; Railway Co. v. Gann, 47 S. W. 493, 101 Tenn. 257. In Railroad Co. v. Baugh, 149 U. S. 368, 13 Sup. Ct. 914, although the case turned on another point, the court apparently recognized this general rule. And see, to same effect, Southern Pac. Co. v. Seley, 152 U. S. 152, 14 Sup. Ct. 530, approving Sweeney v. Engraving Co., 101 N. Y. 520, 524, 5 N. E. 358, in which it was said of the servant, "He knew as much about it, and the risk attending its use, as the master." See, also, Steel Co. v. Mann, 170 Ill. 200, 48 N. E. 417, and Railroad Co. v. McDade, 135 U. S. 570, 10 Sup. Ct. 1044. It will be observed that the rule, as thus stated and applied, proceeds upon the ground that the defect is open, and the danger one reasonably to be apprehended, and the means of knowledge equal; and it is not necessary, for the purpose of this case, to make any broader statement of the rule, for the conditions here met with give rise to no intricate question of mechanics, any imperfect intelligence on the part of the servant, or other ground for exception. With the rule in a case of latent defects, we here have no concern. It must not be forgotten that when the defect is patent, and the danger apparent, and such as the servant, in the exercise of reasonable prudence, ought to comprehend, with a constant opportunity for inspection, he is bound to know of the danger. He has, in such a case, constructive notice. Southern Pac. Co. v. Seley, 152 U. S. 152, 14 Sup. Ct. 530; Railroad Co. v. McDade, 135 U. S. 570, 10 Sup. Ct. 1044. When the defect is known, and the danger apparent, it is immaterial that the servant does not anticipate the precise extent or character of the injury which may result. None of the authorities upon the subject put the rule of assumption of risks upon the narrow distinction that the servant may know of the danger, but not fully realize the extent or character of the injury which may be sustained. The attempt to introduce such a test or condition would render the rule of the assumption of risks by the servant practically nugatory. That there is no such impracticable element in the rule must be regarded as settled. Railroad Co. v. Kemper, 47 N. E. 214, 147 Ind. 561; Feely v. Cordage Co., 161 Mass. 426, 37 N. E. 368. If the water-pipe line was constructed too close to the fly wheel, with the bolts attached, the danger that the bolts on the fly wheel would come in contact with the water-line pipe in the operation of the machinery, and thereby cause an accident, was fully as apparent to the servant as the master; and if it might have been anticipated that fragments of the broken bolts on the fly wheel, or of the broken water-line pipe, hurled in different directions, might cause injury, the anticipation of such a result was as much within the power of the servant as the master. In Kohn v. McNulta, 147 U. S. 241, 13 Sup. Ct. 298, the defect complained of by the servant was a lack of deadwoods or bumpers on the freight cars. The court, disposing of this contention, said:

"The intervener was twenty-six years of age. He had been working as a blacksmith for about six years before entering into the employ of the defendant. He had been engaged in this work of coupling cars in the company's

Digitized by Google

yard for over two months before the accident, and was therefore familia with the tracks and condition of the yard, and not inexperienced in the bus ness. He claims that the Wabash freight cars, which constituted by far th larger number of cars which passed through that yard, had none of thoe deadwoods or bumpers; but inasmuch as he had in fact seen and couple cars like the ones that caused the accident, and that more than once, and s the deadwoods were obvious to any one attempting to make the couplin and the danger from them apparent, it must be held that it was one of th risks which he assumed in entering upon the service."

The principle thus declared is fully applicable to the case in han

This case, in its facts, is quite different from Norman v. Railroa Co., 22 U. S. App. 505, 10 C. C. A. 617, and 62 Fed. 727, and James l Clow & Sons v. Boltz (decided at the present term of this court) 9 Fed. 572.[1] In the former case the testimony in behalf of the injure employé went to show that the injury was without fault on his par but was due to a defective condition of the floor of the shed where h was working, and that he had worked at the place where he was in jured only at rare intervals, and that he was ignorant of the cond tion of the floor of the shed at that place; the servant expressly den ing knowledge of the defects in the floor. The foreman of the maste on the contrary, testifies that the servant had been in that part o the shed several hundred times. It was adjudged that the confli of testimony between the servant and the foreman as to the ser ant's knowledge, and his opportunity to know, of the defects, shoul have been submitted to the jury. In the latter case certain wedge had been introduced in the framework of the truck or car eight da before the accident, in order to meet a demand made by heavy order whereby the danger was increased. This change was made with th knowledge and by the direction of the superintendent and manage of the master's works, and against the express protest of the expe core maker in charge of the labor gang, who stated that the use o such wedges was not safe. The injured employé was a common la borer, without mechanical skill, and the car had been operated befor the change for a period of six months without injury. At the joi of the two rails on one side of the car track there was a depressio in the ground, causing one rail to rest higher than the other, an giving a jolt to the passing car. This defect was known to the ser ant, but an attempt had been made to remedy it. Under such circun stances as these, the court held that it could not be ruled, as a matte of law, that the question of the servant's knowledge of the dange incident to the use of the machinery as changed was not one for th jury.

The conclusion of the whole matter, shortly put, is that the defec and conditions complained of as causing the accident were obviou and known to the servant when he entered into the service, and co stantly brought under his notice, in the discharge of his regular dutie during the time of his service. He was a skilled, experienced en gineer, with opportunities to observe and understand the danger sup rior to those of the master. In such a state of the evidence as thi the question was one of law for the court, and not of fact for the jur

[1] 34 C. C. A. 550.

Digitized by Google

The evidence was so conclusive that it would have been the clear duty of the court below, on motion, to set aside the verdict returned in plaintiff's favor; and in such a case it was the court's duty, on motion, to withdraw the case from the consideration of the jury. On substantially such facts as this record discloses, the rule has been thus announced:

"Where, however, an experienced operator, cognizant of the defects of machinery, puts himself within its range, and is injured, he is thereby, in law, supposing the fact to be established, precluded from recovering from the employer." Whart. Neg. § 218.

In Elliott v. Railway Co., 150 U. S. 246, 14 Sup. Ct. 85, Mr. Justice Brewer, speaking for the court, enunciated the rule as follows:

"It is true that questions of negligence and contributory negligence are ordinarily questions of fact to be passed upon by a jury; yet, when the undisputed evidence is so conclusive that the court would be compelled to set aside a verdict returned in opposition to it, it may withdraw the case from the consideration of the jury, and direct a verdict. Railroad Co. v. Houston, 95 U. S. 697; Schofield v. Railroad Co., 114 U. S. 615, 5 Sup. Ct. 1125; Railroad Co. v. Converse. 139 U. S. 469, 11 Sup. Ct. 569; Aerkfetz v. Humphreys, 145 U. S. 418, 12 Sup. Ct. 835."

And in the later case of Treat Mfg. Co. v. Standard Steel & Iron Co., 157 U. S. 674, 15 Sup. Ct. 718, the supreme court stated the same rule thus:

"But it is well settled that where the trial judge is satisfied, upon the evidence, that the plaintiff is not entitled to recover, and that a verdict, if rendered for plaintiff, must be set aside, the court may instruct the jury to find for the defendant."

Well-considered cases in this court speak the same language. Blount's Adm'x v. Railway Co., 22 U. S. App. 129, 9 C. C. A. 526, and 61 Fed. 375; Railway Co. v. Lowry, 43 U. S. App. 408, 20 C. C. A. 596, and 74 Fed. 463; Railroad Co. v. Cook, 31 U. S. App. 277, 13 C. C. A. 95, and 66 Fed. 115.

Concluding, as we do, that the defendant was entitled to a peremptory instruction in its favor, and this view being decisive of the case as presented in this record, it is not material to decide other questions made and discussed. Reversed and remanded, with a direction to set aside the verdict and grant a new trial.

(94 Fed. 83.)

SANDHAM v. GROUNDS.

(Circuit Court of Appeals, Third Circuit. May 9, 1899.)

No. 31, March Term.

1. DAMAGES—BREACH OF CONTRACT FOR ADOPTION.

The measure of damages for breach of a contract by one person to adopt another and make the latter an heir, under the law of Pennsylvania, is not the value of the share of the promisor's estate at his death which would have been inherited by the promisee, but the value of the services rendered or outlay incurred by the promisee on the faith of the promise, with interest.

Digitized by Google

2. SAME—WHAT LAW GOVERNS.

Where a contract for adoption was to be performed in a certain state, and the estate to which the person to be adopted would thus have become an heir is there situated, the law of such state governs as to the measure of damages for a breach of the contract.

In Error to the Circuit Court of the United States for the Western District of Pennsylvania.

W. M. Hall, Jr., for plaintiff in error.
James S. Young, for defendant in error.

Before DALLAS, Circuit Judge, and KIRKPATRICK and BRADFORD, District Judges.

KIRKPATRICK, District Judge. The plaintiff in this action brought her suit against the defendant, as administratrix of Samuel Smith, to recover damages for the breach of a contract entered into between the plaintiff and said Smith in his lifetime, in and by which said Smith agreed that he would take the plaintiff (who was his niece) from her home in Ireland to America, adopt her as his daughter, and that he would so provide that at his death she should receive one-half part of his property. The plaintiff accordingly came to America with her uncle, and for a short time continued to live under his care and protection. During her stay she rendered no service, and after her departure, at the end of some 16 months, she did not return to him. Smith never took any steps looking to the adoption of the plaintiff as his daughter according to the form of the statute of the state of Pennsylvania, but did so adopt an inmate of his house, who was a relative of his wife. The contract between Smith and the plaintiff was to be performed in the state of Pennsylvania, where Smith resided, and where he afterwards died intestate. Upon the trial of the cause the learned judge charged the jury, inter alia, as follows:

"Upon the question of the rule of damages the court charges the jury that for the breach of the alleged contract the measure of damages is not the value of decedent's estate at the time of his death, but the value of the services the plaintiff rendered the said Smith while she remained with him, and also any pecuniary outlay or expense she was subjected to or incurred, with interest."

To this part of the charge exception was taken, and the only question argued before us was whether the measure of damages was correctly stated. We cannot doubt that the damages in this case must be determined by the laws of the state of Pennsylvania, where the contract was to be performed, and where the assets of Smith's estate are properly distributable. We find, upon reviewing the decisions of the highest court of that state, that the question here at issue was set at rest in Graham v. Graham's Ex'rs, 34 Pa. St. 475, in which the case of Jack v. McKee, 9 Pa. St. 240, holding a contrary doctrine, was carefully considered, and expressly overruled. In Graham v. Graham's Ex'rs, supra, the decedent agreed with two distant relations that, if they would come and live with him, they should share his property equally with his nephews after his death. He failed to carry out his agreement, and suit was brought against his executors to recover the value of the promised shares of his estate. The plaintiff

Digitized by Google

offered to prove the value of the decedent's estate, and the share of each nephew, for the purpose of showing the damage sustained by the plaintiff. To this offer the defendants objected on the ground that the measure of damages was the value of the services rendered, and was not to be governed by the value of the decedent's estate. Strong, J., said:

"Without pressing the insufficiency of the proof of the contract, * * * it by no means follows that the measure of damages in an action for its breach is the value of the thing promised at the time of the breach. Jack v. McKee, supra, is no longer a rule. This court has returned from the departure which was made in that case."

The rule laid down in Graham v. Graham's Ex'rs has been invariably followed since by the courts of Pennsylvania, the latest case brought to our attention being Kauss v. Rohner, 172 Pa. St. 481, 33 Atl. 1016, in which the court said, "Proof of contract did not entitle plaintiff to recover value of the estate." We find no error in the instruction given by the learned judge, and the judgment of the circuit court should be affirmed.

(94 Fed. 127.)

PETERS v. UNITED STATES.

(Circuit Court of Appeals, Ninth Circuit. February 13, 1899.)

No. 463.

1. CRIMINAL LAW—OFFENSES COGNIZABLE BY FEDERAL COURTS.
   The courts of the United States do not resort to the common law as a source of criminal jurisdiction, but can only take cognizance of such crimes and offenses as are expressly designated by the laws of congress, and of which they are by such laws given jurisdiction.

2. INDICTMENT—SUFFICIENCY—CHARGING OFFENSE IN LANGUAGE OF STATUTE.
   Where a statute fully, directly, and expressly, without any uncertainty or ambiguity, sets forth all the elements of an offense, an indictment is sufficient which charges the offense substantially in the language of the statute.

3. SAME—DESCRIPTION OF OFFENSE.
   The sufficiency of an indictment is to be tested by ascertaining whether it contains every element of the offense intended to be charged, and sufficiently apprises the defendant of what he must meet, and whether, in case other proceedings are taken against him for a similar offense, the record shows with accuracy to what extent he may plead a former acquittal or conviction.

4. SAME—REFERENCE TO AVERMENTS OF PREVIOUS COUNT.
   An averment in the second or a subsequent count of an indictment, drawn under Rev. St. § 5209, that said defendant, on a date given, "being then and there the cashier of said association as aforesaid," as such cashier, committed the acts charged, is sufficient to identify and incorporate in such count the averments of the first count that the defendant was, at the time referred to, the duly elected and acting cashier of a certain national banking association, and that such association was at the time existing and carrying on business under the laws of the United States.

5. SAME—MANNER OF DESIGNATING YEAR.
   The designation in an indictment of the year in which the offense is laid by Arabic figures is sufficient, and no prefix is essential; the year of

Digitized by Google

the Christian era being understood as meant in all public or judicial docu ments in this country, unless otherwise expressed.

6. NATIONAL BANKS—FALSE ENTRIES BY OFFICERS—SUFFICIENCY OF INDICT MENT.

An indictment against a sole defendant, charging that, as cashier of a national banking association, he caused and procured the making of false entries in the books of the bank, by certain clerks under his control as such cashier, with intent to defraud, sufficiently charges him with the offense as principal; the making of such entries by his direction being the same, in legal effect, as his making them in person.

7. CRIMINAL LAW—SUFFICIENCY OF INDICTMENT TO SUPPORT SENTENCE.

Where a verdict of guilty is rendered on a number of counts, a sen tence which does not exceed that which may legally be imposed on any one count is supported by the indictment, if any count is good.

8. SAME—PLEA OF FORMER ACQUITTAL—MANNER OF DISPOSITION.

Where a so-called "special plea of former acquittal" is made in the form of a motion to discharge the defendant and exonerate his bond based on former proceedings in the same cause and court, so that no evidence thereon is required, and only a question of law is presented it is not necessary that issue should be joined thereon, and it may properly be disposed of by the court, like any other motion.

9. SAME—REVIEW—WAIVER OF OBJECTION.

A defendant who, after the overruling of a special plea of former ac quittal, proceeds to trial without objection as to the manner in which the plea was disposed of, waives the right to raise the question on appeal.

10. SAME—FORMER ACQUITTAL—CONSTRUCTION OF VERDICT.

In a prosecution against an officer of a national banking association under Rev. St. § 5209, for making false entries in the books of the as sociation, and in reports to the comptroller, the indictment containing a number of counts, some charging the making of entries with intent to injure and defraud the association, and others with intent to deceive the association, and, in case of reports, the comptroller, the jury, on the first trial, rendered a verdict, which was set aside and a new trial granted, in which they found the defendant "guilty, as charged in the indictment, in falsifying the returns to the comptroller of the currency, and also books of the * * * bank, and on the balance of the counts we do not agree." *Held*, that such verdict could not be construed as a special verdict, amount ing to an acquittal.

11. SAME—TRIAL—PRESENCE OF DEFENDANT—SUFFICIENCY OF RECORD.

It is not essential that the record of a criminal trial should show the presence of the defendant at every step of the proceedings, but the pre sumption is that his presence, once noted, continues at least during the entire day.

12. SAME—EXAMINATION OF WITNESS—LEADING QUESTIONS.

Permitting the prosecution to propound leading questions to one of its witnesses is within the discretion of the trial court, and cannot be made the basis of an assignment of error.

13. SAME—EVIDENCE.

For the purpose of showing the falsity of an entry in the books of a national bank purporting to show a special deposit by a county treasurer of $10,000 immediately prior to a report made to the comptroller, which was shown to have been withdrawn a few days later, the government in troduced the treasurer as a witness, who testified that he did not re member whether or not he made the deposit, but, if he did so, it was from public funds in his hands as such treasurer. *Held*, that it was within the discretion of the court to permit the introduction of the treasurer's cashbook for the purpose of showing whether or not any entry of such deposit or withdrawal appeared therein, although the witness testified that if he made the deposit, no record thereof would appear on the books of his office.

Digitized by Google

14. WITNESSES—RIGHT OF PARTY TO SHOW INCONSISTENCY IN TESTIMONY OF HIS OWN WITNESS.

While a party is not permitted to impeach his own witness, he is not precluded from showing facts inconsistent with some of the statements of the witness.

15. NATIONAL BANKS—FALSE ENTRIES IN BOOKS BY OFFICER—WHAT CONSTITUTE.

In a prosecution of an officer of a national bank for making false entries in its books with intent to deceive the bank examiner, where there was testimony as to certain deposits made which were marked "special," and that the identical money was a few days later returned to the depositors, an instruction was correct which charged the jury that, if they found beyond a reasonable doubt that the understanding between such depositors and the defendant was that the money was only to be used by the bank for the purpose of being shown to the examiner as a part of the funds of the bank, then the entry of such sums as deposits was a false entry.

16. SAME—INTENT—INFERENCE FROM FACTS PROVED.

A finding as to the intent with which false entries were made in the books of a national bank by an officer of the bank may be based on legitimate inferences from the facts shown, and where, on the trial of a defendant for making such entries with intent to deceive the bank examiner, it is found that the entries were false; that they were made, or caused to be made, by defendant; and that their necessary effect was to deceive the bank examiner,—it may be inferred that they were made with such intent.

17. CRIMINAL LAW—TRIAL—CONSTRUCTION OF INSTRUCTIONS.

In determining whether a charge in a criminal case is misleading, it must be read and considered as an entirety.

In Error to the Circuit Court of the United States for the Western Division of the District of Washington.

W. H. Bogle, W. H. Pritchard, and B. W. Coiner, for plaintiff in error.

Wilson R. Gay, U. S. Atty., and Charles E. Claypool, Asst. U. S. Atty.

Before ROSS and MORROW, Circuit Judges, and HAWLEY, District Judge.

HAWLEY, District Judge. William G. Peters, the plaintiff in error, was indicted by the United States grand jury of the district of Washington for a violation of the provisions of section 5209, Rev. St., which reads as follows:

"Sec. 5209. Every president, director, cashier, teller, clerk or agent of any association, * * * who makes any false entry in any book, report, or statement of the association, with intent, in either case, to injure or defraud the association, * * * or to deceive any officer of the association or any agent appointed to examine the affairs of any such association; * * * shall be imprisoned not less than five years nor more than ten."

The indictment contained 46 counts. Counts 1 to 22, inclusive, have reference to alleged false entries and reports made with intent to injure or defraud the association. The remaining counts came under the other provisions of the statute, as to the acts of defendant having been committed with intent to deceive an agent appointed to examine the affairs of such association, or making false reports and statements of the bank to the comptroller of the currency.

Upon the first trial of the case the jury found a verdict as follows:

Digitized by Google

"We, the jury impaneled in the above-entitled cause, find the defendant, William G. Peters, guilty as charged in the indictment, in falsifying the returns to the comptroller of currency, and also books of the Columbia National Bank, and on balance of counts we do not agree."

Thereafter, in due time, counsel for Peters moved the court for his discharge upon the following grounds:

"Because the verdict of the jury is insufficient in form, substance, and law to authorize the entry of any judgment against the defendant other than a judgment of acquittal, and that he be discharged, and do go hence without day."

This motion was overruled, and exception taken. Thereupon a motion was made "for a judgment of acquittal and discharge on said verdict as to counts 1 to 22 of said indictment, both inclusive"; which motion was overruled, and exceptions thereto were allowed.

Peters then made a motion to set aside the verdict of the jury and for a new trial, which was granted. The trial of the cause was continued until the next term; at which time, the cause coming on regularly to be heard—

"The defendant, William G. Peters, moved the court for leave to file his plea of former jeopardy to counts 1 to 22, both inclusive, of the indictment herein, and his plea of former acquittal to counts 23 to 46, both inclusive, of said indictment, which leave was given, and said plea was thereupon filed; and thereupon the district attorney moved the court for leave to enter a nolle prosequi as to counts 2 to 22, both inclusive, of said indictment, which was granted, and a nolle prosequi was thereupon entered, and said defendant discharged as to said counts 2 to 22. And thereupon, upon the statement of the district attorney that he intended to produce no evidence touching the matters alleged in count 1, except evidence to prove the organization of the Columbia National Bank, its location, and the appointment, qualification, and acting of the defendant as its cashier, and to prove venue, the court overruled said pleas as to count 1, and also as to counts 23 to 46, inclusive; to which action of the court in overruling said pleas as to count 1, and counts 23 to 46, inclusive, the defendant excepted, and his exception was allowed."

The case thereafter proceeded to trial on the remaining counts (23 to 46, inclusive) on defendant's plea of not guilty. The jury found a verdict thereon as follows:

"We, the jury impaneled in the above-entitled case, find the defendant, William G. Peters, guilty as charged in counts numbered 23, 24, 25, 26, 27, 28, 29, 30, 31, 32, 33, 34, 35, 36, 37, 38, 39, 40, 41, 42, 43, 44, 45, and 46 of the indictment therein contained."

Motions were thereafter made for a new trial and in arrest of judgment. These motions were overruled, for the reasons given by the circuit court in U. S. v. Peters, 87 Fed. 984.

The rights of a defendant in a criminal case should, at all times, be carefully guarded. But courts must look at the substance, instead of the mere shadow, of the alleged errors. Courts should not be called upon to deal with "trifles light as air." We have carefully read all the testimony contained in the record, and have arrived at the conclusion that the evidence is sufficient to sustain the verdict of the jury. This being true, there must be something legal, tangible, and real affecting the essential rights of the defendant to justify the court in reversing the verdict of the jury. Error in law must be affirmatively shown. If the plaintiff in error has not been deprived of any

Digitized by Google

substantial right; if he has not been misled; if he has not been prejudiced or injured in any respect,—he has no real or substantial cause for complaint simply because the old forms and precedents have not been literally followed. He presents for the consideration of this court 40 specific assignments of error, nearly equal in number to the counts originally contained in the indictment. Twenty-one of these counts were summarily disposed of for want of any proof to sustain them. It may, in the outset, be said that at least that number of the assignments—some of which, like the counts in the indictment, are repeated, to save any question as to there being a proper statement—may likewise be disposed of. But, notwithstanding this fact, the case is left as full of points as the hide of a porcupine is of quills.

It is our duty to carefully examine all questions worthy of consideration, and it will be our endeavor to group them under as few heads as possible, and at the same time to leave none of the important points unnoticed or undisposed of.

It must be borne in mind that the national courts do not resort to common law as a source of criminal jurisdiction. Crimes and offenses cognizable under the authority of the United States can only be such as are expressly designated by law. It devolves upon congress to define what are crimes, to fix the proper punishment, and to confer jurisdiction for their trial. U. S. v. Walsh, 5 Dill. 60, Fed. Cas. No. 16,636; U. S. v. Martin, 4 Cliff. 156, Fed. Cas. No. 15,728; In re Greene, 52 Fed. 104; Swift v. Railroad Co., 64 Fed. 59; U. S. v. Hudson, 7 Cranch, 32; U. S. v. Coolidge, 1 Wheat. 415; U. S. v. Britton, 108 U. S. 199, 206, 2 Sup. Ct. 531.

Every indictment should charge the crime, which is alleged to have been committed, with precision and certainty, and every ingredient thereof should be accurately and clearly stated; but where the offense is purely statutory, and the words of the statute fully, directly, and expressly, without any uncertainty or ambiguity, set forth all the elements necessary to constitute the offense intended to be punished, it is sufficient to charge the defendant in the indictment with the acts coming fully within the statutory description, in the substantial words of the statute. Ledbetter v. U. S., 170 U. S. 606, 610, 18 Sup. Ct. 774, and authorities there cited; 10 Enc. Pl. & Prac. 483, and authorities there cited.

Few indictments under the national banking law have been so skillfully drawn as to escape the hypercriticism of learned counsel. Many of them might, doubtless, have been made more definite and clear. Our object will be to get at the merits, if any there be, of the numerous objections urged,—to ascertain whether the defendant has been prejudiced by the course pursued by the court; whether any of his legal rights has been invaded or violated; and to brush away the cobwebs of pure technicalities with which the trial of the case, as in all criminal cases, seems to be surrounded.

The true test of the sufficiency of an indictment is not whether it might possibly have been made more certain, but whether it contains every element of the offense intended to be charged, and sufficiently apprised the defendant of what he must be prepared

Digitized by Google

to meet; and, in case any other proceedings are taken against him for a similar offense, whether the record shows with accuracy to what extent he may plead a former acquittal or conviction. U. S. v. Simmons, 96 U. S. 362; U. S. v. Carll, 105 U. S. 612; U. S. v. Hess, 124 U. S. 483, 8 Sup. Ct. 571; Pettibone v. U. S., 148 U. S. 197, 13 Sup. Ct. 542; Potter v. U. S., 155 U. S. 438, 15 Sup. Ct. 144; Evans v. U. S., 153 U. S. 584, 587, 588, 14 Sup. Ct. 934, 939; Batchelor v. U. S., 156 U. S. 426, 15 Sup. Ct. 446; Cochran v. U. S., 157 U. S. 286, 290, 15 Sup. Ct. 628.

The essentials of an indictment drawn under the provisions of section 5209 are clearly stated in U. S. v. Britton, 107 U. S. 655, 662, 2 Sup. Ct. 512, 518, as follows:

"(1) That the accused was the president or other officer of a national banking association which was carrying on a banking business. (2) That, being such president or other officer, he made in a book, report, or statement of the association, describing it, a false entry, describing it. (3) That such false entry was made with intent to injure or defraud the association, or to deceive any agent, describing him, appointed to examine the affairs of the association."

See, also, Cochran v. U. S., 157 U. S. 286, 293, 15 Sup. Ct. 628.

The indictment under consideration sets forth all of these essentials in proper manner and form.

With these general observations, which are more or less applicable to many, if not all, of the points to be discussed, we will proceed to notice some of the specific grounds urged by counsel on behalf of the plaintiff in error.

1. It is claimed that the counts in the indictment, especially 23 to 46, inclusive, upon which the plaintiff in error was convicted, are radically defective, in this: That it is not in either of said counts alleged that the association, whose books and reports are alleged to have been falsified, was organized under the national banking laws of the United States, nor that it was an existing banking corporation, or carrying on the banking business, under the laws of the United States, at the time the acts of Peters are alleged to have been committed.

The first count in the indictment, in so far as it relates to the points referred to by counsel, reads as follows:

"That William G. Peters, on the second day of July, in the year of our Lord one thousand eight hundred and ninety-five, and continuously thereafter, until the twenty-fourth day of October, in said year, at the county of Pierce, in the district of Washington, was the duly elected, qualified, and acting cashier of the Columbia National Bank of Tacoma, a national banking association organized, and then and there existing, under the laws of the United States, and then and there engaged in carrying on a general banking business in the city of Tacoma, in said district, and the said William G. Peters did then and there by virtue of his said office and employment as such cashier of said association,' etc.

The counts from 23 to 46 are substantially, though not precisely alike. We copy one of these counts in order to show more clearly the objections urged thereto:

"And the grand jury as aforesaid, on their oath aforesaid, do further present that said William G. Peters, on the 11th day of July, 1895, being then and there the cashier of said association, as aforesaid, did then and there, as said cashier, willfully and feloniously make in a certain book, then and there be-

Digitized by Google

longing to and in use by the said association, in transacting its said banking business," etc.

Counsel admit that a sufficient reference is made by the words "as aforesaid" to identify Peters as the duly-elected cashier, and that the term "said association" identifies the Columbia National Bank of Tacoma, but argues that they are not sufficient to identify the other portions of the first count as to the organization and existence of the bank, under the laws of the United States. We are of opinion that the references made in the subsequent counts are sufficient in law. The language used therein could not, under any reasonable construction, be held to refer to but one William G. Peters, and to but one association, the Columbia National Bank of Tacoma, and necessarily includes the entire description of the officer and of the association as set forth in the first count.

In Blitz v. U. S., 153 U. S. 308, 316, 14 Sup. Ct. 924, 925, the indictment was drawn under section 5511 of the election law, and contained three counts. In the first count it was alleged:

"That on the 8th day of November, A. D. 1892, at Kansas City, in the county of Jackson and state of Missouri, there was then and there an election, duly and in due form of law had and held, for choice of representative in the congress of the United States, * * * and that at the said election one Morris Blitz did then and there unlawfully, falsely, knowingly, and feloniously personate and vote, and attempt to vote, in the name of another person, other than his own name," etc.

The latter portion of the first count was held defective, in that it failed to state that the defendant voted for a representative in congress. In the course of the opinion, in reviewing other counts, the court said:

"In respect to the third count of the indictment, but little need be said. It is clearly sufficient, for it charges that 'at said election' the defendant voted more than once for representative in congress. Such double voting is made an offense by the statute. The only question that could arise upon the third count is whether the words of the first count, referring to the election had and held on the 8th day of November, 1892, for representative in congress, can be drawn through the second count, into the third count, by the words, 'at the said election.' As the election named in the first count is the only one specifically described in the indictment, there can be no doubt that the words, 'at said election,' in the third count, refer to the election described in the first count."

The present indictment, tested by this decision, is clearly sufficient.

2. It is claimed that the counts from 23 to 46 are defective in their averments as to the time when the acts are alleged to have been committed. They vary as to the day and month. The one heretofore quoted alleges "that said William G. Peters, on the 11th day of July, 1895," etc. The contention is that there are no words to indicate that by the figures "1895" is meant "the year of our Lord one thousand eight hundred and ninety-five." The ancient rule as to the necessity of designating the era rested upon the fact that two periods were then in vogue in computing time, viz. the reign of the king and the Christian era, and unless the one or the other were designated the time would be uncertain. This rule was therefore upheld with great strictness, and a failure to observe it was held to be fatal. But in the United States no such reason exists, and the rule (although

Digitized by Google

it was adopted and followed by some of the earlier decisions in this country) should not be applied, unless made a requirement by statute. "Cessante ratione legis, cessat ipsa lex." When a year is stated it is not, therefore, necessary to the validity of the indictment that the era, as "in the year of our Lord," or the term "anno Domini," or "A. D.," should be added thereto, because the Christian era will be understood from the mere statement of the year in Arabic figures. Com. v. Doran, 14 Gray, 37, 38; Engleman v. State, 2 Ind. 91, 93; State v. Gilbert, 13 Vt. 647, 651; Smith v. State, 58 Miss. 867, 871; Hall v. State, 3 Ga. 18, 22.

In Engleman v. State the court said:

"It is a fact, historically known, that Christian nations have generally adopted the Gregorian calendar, numbering the years from the birth of Christ. This is a Christian state, and has adopted the same; and when a year is mentioned in our legislative or judicial proceedings, and no mention is made of the Jewish, Mahometan, or other system of reckoning time, all understand the Christian calendar to be used. For example, the constitution of the United States declares that the importation of certain persons shall not be prohibited before the year eighteen hundred and eight, and that of Indiana declares that Corydon shall be the seat of government till eighteen hundred and twenty-five. These are important documents, demanding the greatest certainty and precision of statement, yet whoever heard of any person contending that the year of the union was meant in one of these instances, and the year of the state in the other? To hold an indictment bad for the omission of the words in question can never be necessary to the safety of any of the rights of the accused, and would tend to bring odium on judicial proceedings."

3. The objections urged that certain counts are defective, because they do not charge Peters as a principal, are without merit, in fact or in law. The indictment is drawn against William G. Peters, and no one else. He is the principal; the only person accused of committing the crime. It was drawn so as to cover almost every conceivable state of facts that might be elicited at the trial. Several of the counts allege that Peters in person made the entries which are alleged to be false; others charge that he willfully and feloniously caused and procured the entries to be made by one A. L. Andrus, who was a clerk of the banking association; another, that he willfully and feloniously caused, directed, and procured the entries to be made by one D. A. Young, who was a clerk and bookkeeper of said association, under the control of Peters as cashier. It necessarily follows that the contention of counsel that these counts do not state facts which, if true, make the said Peters guilty as principal, is, as before stated, wholly without merit. He is as guilty if he directed false entries to be made by the clerk or bookkeeper as if he made the entry in person.

In Cochran v. U. S., supra, relied upon by the plaintiff in error, the indictment was against the president and cashier of the bank, and the language of the opinion had reference to that particular state of the facts.

In Agnew v. U. S., 165 U. S. 36, 52, 17 Sup. Ct. 235, 241, the true rule upon this subject is clearly stated in an instruction, which was approved by the court, and reads as follows:

"The crime of making false entries by an officer of a national bank, with the intent to defraud, defined in the Revised Statutes of the United States (section 5209), includes any entry on the books of the bank which is intentionally made to represent what is not true or does not exist, with the intent

Digitized by Google

either to deceive its officers or to defraud the association. The crime may be committed personally or by direction. Therefore the entry on a slip upon the books of the bank, if the matter contained in that deposit slip is not true, is a false entry. If the statement made upon the deposit slip is false, the entry of it in the bank, and the books of the bank, is false."

As the verdict of guilty was rendered upon all the counts, and the sentence did not exceed that which might properly have been imposed upon conviction under any single count, such sentence is good if any such count is found to be sufficient. Claassen v. U. S., 142 U. S. 140, 12 Sup. Ct. 169; Evans v. U. S., 153 U. S. 584, 595, 609, 14 Sup. Ct. 934, 939. The other objections to the indictment need not, in the light of what has already been said, be discussed.

4. It is argued that the court erred in overruling the special plea of the defendant, because no issue in law was joined as to said plea. We have heretofore copied the proceedings in full in relation to this so-called "special plea." By reference thereto, it will be observed that the plea is not, in form or substance, like the ordinary plea "of a former acquittal." It is simply a motion to discharge the defendant from custody, and exonerate his bond. As was said by the learned circuit judge: "It referred solely to proceedings which had been had in the court in which the cause was pending, and concerning which the court needed no evidence, and could take none. The only question presented by the plea was a question of law." It was not a question of fact, to be disposed of by a jury. This, of itself, seems to us to be sufficient to sustain the action of the court in denying the motion or plea. But the case need not rest on that alone. It is true that the record shows that "no demurrer nor traverse to said special pleas was filed by the government." In the light of the facts in regard to the proceedings, it was not necessary. But the record also shows that "the sufficiency of said plea was passed upon by the court on the objection of the district attorney to its sufficiency, made in open court, and the defendant's counsel made no objection to its consideration by the court." And thereafter, "without any further action taken, or any other disposition of the special pleas hereinbefore mentioned, and without objection from the defendant or his counsel on that ground, a jury was duly impaneled and sworn to try said cause on the issues raised and joined by the defendant's plea of not guilty." These quotations from the record clearly show that the plaintiff in error waived his right, if any he ever had, to have his so-called "special pleas" otherwise disposed of before proceeding to a trial upon the merits. In view of the facts set forth in the record, it cannot truthfully be said that he has been deprived of the legal right to have his plea disposed of according to established legal rules.

The case of Com. v. Merrill, 8 Allen, 545, is not in opposition to the conclusion we have reached upon this question. There the defendant pleaded a former conviction to two indictments. When the case was called for trial, the defendant objected that the district attorney had filed no replication or demurrer to the plea, and that there was no issue to be tried. The court, in the course of the opinion, said:

"This defendant was called to trial before the jury on the indictments and his two pleas thereto, and was required, against his objection, to give evi-

Digitized by Google

dence in support of his special plea, though there was no issue thereon; and the judge, on hearing that evidence, ruled that it did not support the plea, and thereupon ordered that the trial proceed upon the plea of not guilty. The judge treated the special plea as if it were before him on demurrer and joinder. * * * The defendant had a right to a trial of his special pleas according to legal rules, and, as he did not waive that right, a majority of the court are of opinion that he has suffered a legal injury by being deprived of such trial."

Here, the plea was made in the form of a motion. The defendant made no objections to the course pursued by the court, and waived his right, if any he had, by consenting to go to trial upon his plea of not guilty. The assignments of error upon this point are not well taken.

5. In connection with the point last discussed, it is claimed that the verdict of the jury on the first trial amounted to an acquittal, and that the court erred in refusing to discharge the defendant. The language of the verdict cannot be legally construed so as to sustain the position contended for by the plaintiff in error, that it is only a special verdict, and does not affirmatively show that the defendant made the entries in the returns to the comptroller of the currency, and in the books of the bank, with the intent to deceive the bank examiner or comptroller. It is a contortion of the language, unjustifiable by any known rule of interpretation, to assert, as counsel does, that the only effect of the verdict is as if it read: "We find the defendant guilty as charged in the indictment to this extent: that he falsified the returns to the comptroller, and also the books of the bank." No such limitation can be injected into the verdict. The verdict was general, not special. The jury found "the defendant, William G. Peters, guilty as charged in the indictment, in falsifying the returns to the comptroller of the currency, and also books of the Columbia National Bank." The indictment, in the counts from 23 to 46, inclusive, consisted of four distinct charges: (1) That defendant made a certain entry in the books of the bank or reports to the comptroller; (2) that the entry so made by the defendant was false; (3) that defendant knew it was false when he made it; (4) that such entry was made by defendant with intent to deceive the bank, or (in the case of the reports) with intent to deceive the comptroller of the currency. As to these counts, the jury found the defendant guilty as charged in the indictment. The other counts (from 1 to 22, inclusive) charged the acts to have been committed by the defendant "with intent to injure and defraud the association," and upon these counts the jury did not agree. These counts before the second trial were dismissed. It is apparent, from this plain statement of the facts, that the court did not err in refusing to discharge the defendant upon the counts from No. 23 to 46, inclusive. Further comment is unnecessary. But it is deemed proper to say that the recent case of Selvester v. U. S., 170 U. S. 262, 18 Sup. Ct. 580, might be examined with profit. In that case the plaintiff in error was indicted for alleged violation of Rev. St. § 5457. The indictment contained four counts. The first charged the unlawful possession of two counterfeit half dollars; the second, the illegal passing and uttering of the same; the third, the unlawful passing and uttering of three pieces of like nature; and the fourth, the counterfeiting of five like coins. The

Digitized by Google

record shows that, after the jury had retired, they returned into court, and stated that, while they were agreed as to the first three counts, they could not do so as to the fourth, and the court was asked if a verdict to that effect could be lawfully rendered. They were instructed that it could be, and thereafter returned a verdict as follows: "We, the jury, find James Selvester, the prisoner at the bar, guilty on the first, second, and third counts of the indictment, and disagree on the fourth count of the indictment,"—which verdict was received and the jury discharged. All the justices agreed that the failure of the jury to return a verdict on the fourth count did not affect the validity of the verdict rendered on the other counts, or the liability of the defendant to be sentenced on that verdict. The majority of the court, after reviewing many authorities, were of the opinion that where the jury rendered a verdict of guilty on some of the counts, and the verdict was silent as to the other count, the discharge of the jury would amount to a second jeopardy as to the charge with reference to which the jury had been silent. They added: "But such, obviously, is not the case where a jury have not been silent as to a particular count, but where, on the contrary, a disagreement is formally entered on the record. The effect of such entry justifies the discharge of the jury, and therefore a subsequent prosecution for the offense as to which the jury has disagreed, and on account of which it has been regularly discharged, would not constitute second jeopardy." A minority of the court were of opinion that, the defendant having been sentenced under the counts upon which he was found guilty, the effect of such conviction and sentence disposed of the whole indictment, and operated as an acquittal upon the count on which the jury failed to agree. The court did not err in overruling the motion of the plaintiff in error in arrest of judgment.

6. We are now brought to a consideration of the alleged errors occurring during the second trial. It is claimed that the record does not affirmatively show that the defendant was present at "every step of the trial." We will again look at the record, and ascertain the facts upon which this claim is made. The record made on the 9th day of November, 1897, reads as follows:

"Now, on this day, this cause came regularly on to be heard; Wilson R. Gay, Esq., United States attorney, and Charles E. Claypool, Esq., assistant United States attorney, appearing for the prosecution, and D. W. Colner and W. H. Bogle, Esqs., appearing for the defendant. * * * Counsel for each side having announced their readiness for trial on the remaining counts of said indictment, a jury was called, and the following named persons were examined and duly sworn to try the case: * * * Thereupon the trial duly proceeded until the hour of adjournment, when, by consent, the jury was admonished by the court, and allowed to separate until the incoming court to-morrow morning."

The record made on the 12th day of November, 1897, after stating the presence of the judge, reads as follows:

"Now, on this day, this cause came on for further trial. The jury having been called, the trial duly proceeded to the conclusion; whereupon, after argument of counsel, the jury was duly charged by the court, and retired for deliberation upon its verdict; and thereupon, after due deliberation, the jury returns into open court, and, having been called, in the presence of the defendant, present to the court a verdict, in the words and figures following."

Digitized by Google

These are the only entries in the record referred to by counsel. It is claimed that the record of the proceedings on November 9th does not show, except by inference, that the plaintiff in error (defendant in the court below) was present when the jury was examined, and sworn to try the case, and that the record on November 12th fails to show his presence while the testimony was being introduced, or at the time when the instructions were given to the jury. No principle of law, relating to criminal procedure, is better settled than that, in felony cases, nothing should be done in the absence of the prisoner. It is his unquestioned right "to be confronted with his accusers and witnesses." He has the legal right to be present when the jury are hearing his case, and at all times during the proceeding of the trial, when anything is done which in any manner affects his right; and, as a general rule, it is undoubtedly true that, when his personal presence is necessary to protect his rights, the record ought to show the fact of his presence. Lewis v. U. S., 146 U. S. 370, 372, 13 Sup. Ct. 136, and authorities there cited. It is the duty of clerks to see that the record speaks the truth concerning this fact as well as others occurring during the trial. A strict observance of these rules by the ministerial officers charged with this duty would certainly tend to relieve the courts of much trouble and annoyance. But what must the record show? What entry must be made? In general terms, it may be stated that the minutes of the court should affirmatively show everything which is essential to the validity of a criminal trial. The record of each day should show the presence of the court and its officers, of the respective attorneys, of the defendant, and of the jury, and then state the proceedings in the order of their occurrence. We must not be understood as intimating that, if the proceedings are not entered in this precise form, the record would be defective, but simply as suggesting a proper form of keeping the minutes. Every case must, of course, stand or fall by its own particular facts, as shown by the record. When the record does affirmatively show that the defendant was present, it is unnecessary to repeat that fact "at every step" which is taken during the day. It would be absurd to require that every time a witness is sworn, a motion made, a ruling announced, an exception noted, an instruction given, leave of the court for a juror to retire in charge of an officer for a few minutes, or any other step taken, an entry in the journal must affirmatively show that "the defendant was then and there personally present." The law never requires, even in a criminal trial, vain and useless things to be done. Our attention has not been called to any case which holds that a record which omits noticing the presence of the defendant "at every step" taken during the day when his presence, as in the present case, was once regularly entered in the minutes, is insufficient. All the cases which discuss this question hold that the fact of the defendant's presence need not be repeated at each recorded step. Jeffries v. Com., 12 Allen, 145, 154; Grimm v. People, 14 Mich. 301, 308; State v. Wood, 17 Iowa, 19, 21; Folden v. State, 13 Neb. 328, 332, 14 N. W. 412; State v. Lewis, 69 Mo. 92,

Digitized by Google

96; Territory v. Yarberry, 2 N. M. 391, 457; Irvin v. State, 19 Fla. 872, 891; Lawrence v. Com., 30 Grat. 845, 851; Cluverius v. Com., 81 Va. 787, 848; Stephens v. People, 19 N. Y. 549, 552; State v. Craton, 28 N. C. 165, 168; Schirmer v. People, 33 Ill. 276, 284.

As was said in Palmquist v. State (Fla.) 11 South. 521:

"It is not indispensable that the record should show, by a direct affirmative recital, the personal presence of the accused at each and every step taken in the trial, although such presence is necessary. This fact will sufficiently appear if the record affirmatively shows either expressly or by reasonable intendment, or in substance, that he was present in person during the trial."

In State v. Lewis, the court said:

"It is also alleged that the record does not show affirmatively that the defendant was present when the verdict was rendered. It does show that he was present at the opening of the court, on the day the verdict was rendered. It never was decided by this court that the record must affirmatively show that the defendant is present at every hour of the day, or at every step of the proceeding on that day. It is sufficient that he was present when the court met, and his absence will not be presumed."

We therefore decline to indulge in the presumption that the defendant was allowed to depart after his presence was noted, and that he remained absent during the balance of the day, or that he was only present when the court was opened, or when the jury retired, or when the jury returned with a verdict, as the case may be. It is just as necessary to show that the jury and the judge were present during the trial as it is to show that the defendant was present, but their presence need not be repeated "at every step" of the proceedings. The presumption, if any is to be indulged in, would be that a presence, once noted, continues at least during the entire day. Without further elaboration, our conclusion is that the point urged by counsel is without any foundation in the facts, as shown by the record; that it cannot be sustained upon any substantial reason; and is not supported by authority.

7. It is contended that the court erred in permitting the government to ask and prove by its witness A. D. Andrus that he had testified at the first trial that certain entries alleged to be false, in the books of the bank, were in the handwriting of the defendant. The witness Andrus was the teller of the bank. He testified, generally, that he was familiar with the handwriting of Mr. Peters. When questioned as to who made the figures "20," which appeared in the bank's books, whereby a certain entry was changed, opposite the words, "Gold in vault," from "200," which was in the handwriting of the witness, to "20,200," he said: "I am not certain whose figures they are. * * * I would not like to state positively about it. * * * I should say they look very much like his [Peters'] figures." The figures in the record opposite, "Silver in tray," which were in the witness' handwriting, were "2,838.05," and were changed by placing a figure "2" in front thereof, so as to read "22,838.05." When asked as to whose handwriting this first figure "2" was, he said: "I do not know. I think it resembles his [Peters'] writing. I suppose any one could make a figure '2' good deal like that." Another entry in the book, which was made by the witness, of "2,775.02," was changed by making a

Digitized by Google

figure "3" in front, so that it would read "32,775.02." When as in whose handwriting the figure "3" was, he said: "I am not tain whose that is." And as to whether it resembled Mr. Pet figures, he said: "I think it resembles it somewhat." In repl similar questions concerning the figures that had been chan in the books, the witness said: "I think it looks very much like Peters' figures. * * * I think it is in the same handwrit that the rest of those other figures were that I testified to h Resembles those." "Q. And that is whose? A. Resembles Peters' handwriting." The witness was then asked if he did at a former trial, with reference to these same entries and chan "testify positively that those figures were in Mr. Peters' handw ing." The witness answered: "I remember testifying that so figures in this book were in his handwriting, but I don't rem ber whether it was this figure or not." Then certain entries w pointed out to him, and his testimony at the former trial read, where he had positively testified that the added figures w in Mr. Peters' handwriting. The witness in reply said: "W I think that is my testimony, if it was all taken down correct We have made this somewhat extended reference to the answ given by the witness for the purpose of showing that the quest as to his testimony at the former trial was not asked for the p pose of impeaching the witness, as claimed. It did not tend impeach him, for he did not at the present trial at any time st that the changes were not made in the handwriting of Mr. Pete It was not allowed for the purpose of refreshing the memory the witness. True, this was attempted to be done, but the co promptly and properly said to counsel: "You cannot refresh memory of the handwriting by what he testified to at the form trial. You must test his knowledge of the handwriting at present time." Again, the court said: "He can refresh his me ory of that handwriting by examining the figures, or examini Mr. Peters' known or admitted writing or figures." And the amination of the witness then proceeded upon the lines sugges by the court. The case does not, therefore, fall within the ru announced in Putnam v. U. S., 162 U. S. 687, 694, 16 Sup. Ct. 9 which relate solely to the fact that the former testimony would inadmissible for the purpose of refreshing the memory of the w ness. The questions asked the witness were leading. But, was said in St. Clair v. U. S., 154 U. S. 134, 150, 14 Sup. Ct. 10 1008: "In such matters, much must be left to the sound discret of the trial judge, who sees the witness, and can therefore det mine, in the interest of truth and justice, whether the circumst ces justify leading questions to be propounded to a witness by t party producing him." 8 Enc. Pl. & Prac. 86, and authorit there cited.

8. The next contention on behalf of the plaintiff in error is th the court erred in admitting in evidence the cashbook of John Hedges, county treasurer of Pierce county. Like contentions a also made as to the admission of the books of J. W. McCauley, c treasurer, and of the books of the German-American Bank. The

Digitized by Google

alleged errors will therefore be considered together, selecting the one relating to the entry, "J. B. Hedges, special," as being the most favorable to the plaintiff in error, for principal discussion.

The entries which are alleged in the indictment in counts from 23 to 46, inclusive, to be false, and the reports of the same as made to the comptroller of the currency, which are likewise alleged to be false, concern three principal transactions: (1) That a pretended deposit was entered as having been made by the German-American Safe-Deposit & Savings Bank with the Columbia National Bank, in the sum of $20,000, on July 10, 1895; (2) the other two transactions relate to the alleged deposits of $10,000 each in the name of "J. B. Hedges, special," and in the name of "J. W. McCauley, special"; and it was contended at the trial by the government that no such deposits were in fact ever made.

In one of the counts of the indictment it was charged that, in order to make a favorable showing of the condition of the bank on the 28th of September, 1895, in response to a call of the comptroller of the currency, false entries were made, as of the 25th, to show that upon that date J. B. Hedges deposited $10,000 "special," which was drawn out by him on the 30th of September, 1895, and that on the 26th day of September, 1895, J. W. McCauley deposited $10,000 "special," which was drawn out by him on the 30th day of September, 1895. And under various other counts the defendant was charged with alterations of the books to make it appear that $20,000 was, by such deposits, added to the sum total of the cash on hand in the bank. J. B. Hedges, with reference to these matters, was called as a witness on the part of the government, and, among other things, testified as follows:

"I was living in Tacoma on September 25, 1895. I knew of the existence of the Columbia National Bank. I don't remember whether on the 25th day of September, 1895, I made a deposit in the Columbia National Bank, 'J. B. Hedges, special,' $10,000, or not. I had no such amount of my own personal money on deposit. I have made a number of deposits such as 'J. B. Hedges, special,' but I don't know whether I made a deposit on that date or not. I don't remember how it would be marked. I did have money entered to the account of 'J. B. Hedges, special.' I do not remember the dates nor the time. * * * In making deposits of that kind, I would receive a deposit slip, which I would take away with me, and hold it until I got ready for the money, and go and get the money, and then I would give the deposit slip to the officers of the bank, and they would give me the money. * * * I always returned the slip and took the money. * * * When I took $10,000, if I ever did, to any bank, during the fall of 1895, it was public funds,—state, county, and different funds going to make up that amount. When I took an amount like that from the public repositories, I would go and put it in my own name, 'special,' I kept no record at all of it in my office. No record was necessary. * * * If the records of the bank would show that there never had been, or pretended to be, more than one deposit in my name marked, 'J. B. Hedges, special,' that would not refresh my memory, or aid me to say that I never had made any, or, if at all, more than one; it would have no weight with me."

After giving this testimony, his cashbook as county treasurer was produced; and after he had testified that he believed the book to be correct, and that he had had general supervision of it and checked it up, and had therein kept the transactions of his office, he was allowed, over the objection of the plaintiff in error, to testify as to the entries

Digitized by Google

of his books on September 24th to September 30th, inclusive, an from this evidence it did not appear that any sum of $10,000 had bee entered upon his books, either as deposited in the bank, or as draw from the cash on hand, or as restored to the cash on hand. Afte some testimony concerning said entries, the witness adhered to hi former testimony in regard to having made a deposit about tha time, and again stated that, if such deposit was made, his testimon concerning the same would not in any way be affected by the fac that no entries thereof had been made in his book.

The testimony of Mr. Hedges, county treasurer, and of Mr. M Cauley, city treasurer, which is in many respects similar in its ge eral character, exhibits upon its face, to use a mild term, a most r markable and extraordinary transaction on the part of these of cials, intrusted, as they were, with public funds. Neither of the witnesses testified positively about taking the sum of $10,000 to th Columbia National Bank, or to Mr. Peters, the cashier, and receivin a deposit slip therefor at the date mentioned. They say they do n remember; might have done so. Both were unwilling to swear po itively either that they did or did not make such a deposit at the tim mentioned. McCauley testified:

"To save my life, I couldn't tell you whether I made a deposit of $10,000 o not. I would not say that I did not. * * * I made deposits, and too a deposit slip made out by the cashier and delivered to me. * * * I hav a faint recollection that I did make one or more deposits in the Columbi National Bank, and received a deposit slip on which the word 'special' wa written, but I would not testify positively. * * * I have had a good de of trouble in the last two years, * * * and my memory has been som what weakened."

From such statements it is apparent that the United States atto ney was surprised at the general trend of the testimony of his own wi nesses, and sought, in various ways, to bring out all the facts regardin this matter. The books were not offered as substantive evidenc against the plaintiff in error, but were introduced and allowed for th purpose of showing what the witness did or did not do with refe ence to this money; what accounts thereof he kept, or what entrie he made, if any. Courts are vested with much discretion in the ad mission of testimony, under such circumstances. The books wer admissible in order to inform the jury as to all the facts, so that the might judge, from all the circumstances and surroundings, of th probabilities or improbabilities, and reasonableness or unreasonable ness, of the statements made by the witness that he might have mad such a "special deposit," although he could not positively swear tha he did. The government had the right to have the witness explai all the facts, so that the jury could, from the whole story, ascertai the truth. The object, end, and aim of all jury trials is to ascertai the truth; and, if the jury has the right (which is unquestioned) t take into consideration the witness' manner on the witness stand,— his hesitation and refusal to make any positive statement, for wan of recollection,—we see no substantial reason why they might no consider that the books kept under his supervision, and of which h testified he believed to be correct, might not also be considered, i order to enable them to determine the truth. Was it reasonable t

Digitized by Google

believe, from all the testimony, that Hedges did make a special deposit of, and took a deposit slip for, $10,000 on the date mentioned, without making any note thereof on his own books, which would naturally be supposed to speak the truth, and show where the money of the county could be found, if it had been taken away and deposited in a bank or elsewhere? Of course, the witness had the right to explain why no entry was made upon his books; and the jury had the right to consider whether the explanation, as given by him, was or was not reasonable and satisfactory. The rule against impeaching one's own witness has never been extended so as to preclude counsel from eliciting all the facts from the witness, even though some of the facts thus drawn out might appear to be inconsistent with some other portions of his testimony. There is a clear distinction as to the principles of law which prohibit a party from impeaching his own witness and the right of a party to show an inconsistency in some portions of his testimony. In Hickory v. U. S., 151 U. S. 303, 309, 14 Sup. Ct. 334, 336, the court said: "The party so surprised may also show the facts to be otherwise than as stated, although this incidentally tends to discredit the witness." See, also, 1 Greenl. Ev. §§ 443, 444; 1 Thomp. Trials, § 515; 29 Am. & Eng. Enc. Law, 812, and authorities there cited.

9. Finally, it is claimed that the court erred in the instructions given to the jury. On this point numerous objections are urged and argued at great length by counsel. It would serve no useful purpose to notice these points seriatim or to discuss the same in extenso. As before stated, the contention of the government, from the beginning to the end of the trial, was that the amounts represented by the entries alleged to be false had never been deposited in the bank. The weight of the evidence sustains this contention. The teller, bookkeeper, clerks, and other employès of the bank, whose special duties required them, either to handle the money or make an entry thereof in the books, testified it was not there. They did not see it. The accustomed places where the ordinary deposits were kept did not show any such amounts at the time indicated by the entries in the books of the bank which are alleged to be false. The plaintiff in error, however, testified that it was there, and he had the right to have instructions given covering that theory of the case.

Peters, after denying that he personally made any of the entries in the book which are alleged to be false, testified as follows:

"I have no recollection of this deposit of twenty thousand dollars that appears to have been made by the German-American Bank in the Columbia National Bank on July 10, 1895. I have not now the least recollection about that transaction. * * * When I made the reports, I believed them to be true, and I still believe it. I did not direct any of those entries to be made by any one, with reference to this twenty thousand dollars deposit by the German-American Bank."

Referring to the account of "J. B. Hedges, special," under date of September 25, 1895, he said:

"That deposit of $10,000 was actually made by Mr. Hedges. He made it on the date it is shown there,—the 25th. I recollect the circumstances under which that deposit was made. I remember that about that time, or a few days before, * * * I went up to Mr. Hedges' office, and had a talk with

Digitized by Google

him about the general affairs of the bank, and we had considerable of a c versation regarding the business of the bank, particularly with reference getting additional money for the bank. * * * At that time I sugges that if it was convenient for him that I would like to have him make an ditional deposit, anywhere in the neighborhood of ten thousand dollars. afterwards made this deposit. It was late in the afternoon. He made it gold coin. I gave him a deposit slip as evidence that the deposit had be made. * * * When he brought it down to the bank, he told me that might want it in a few days again, and he did not want us to use it unless became necessary for us to do so. I told him that I did not think that would require it, and that I would not use it unless it did become necessa * * * I put it in the safe of the bank. I don't think I could rememb whereabouts in the safe. * * * I afterwards paid that money out to Hedges, somewhere about a week afterwards.—I think the end of the month

With reference to the account of "J. W. McCauley, special," said:

"I did not make any of the entries of that transaction. I know that McCauley made the deposit represented by that entry. He made it with Refreshing my recollection from the book, I would say that he made it on 26th of September. I had a similar talk with him as that I had with Hedges with reference to the bank, and what we were doing, and it was response to that conversation that he subsequently made the deposit. I ga him the slip to evidence the deposit, the same as I had given Mr. Hedg He made the deposit in gold coin. I suppose he brought it in a gold-co sack. * * * I suppose it was about the same as stated on the bo 'J. W. McCauley, special.' When it was fresh in my memory, I did ca entries of those accounts to be made. I put the money that I got from McCauley in the safe. I don't have any particular recollection as to whe abouts in the safe I put it. I presume it was in the same form as when received it. I afterwards paid it to him again. * * * I returned to bo of these gentlemen, Hedges and McCauley, the same sacks and the sa money. * * * I did not use any of these moneys in the business of t bank. I didn't make any of the entries upon the books with reference either of these transactions. I instructed Mr. Young to make the slips a enter them upon the books. I do not remember the date. I think it was day or two after we received it. * * * I didn't give him this directi until 2 or 3 days later. I can't tell you why I did not make it out that nig I just didn't. I didn't think to make it out at that time. I put the money the safe. I didn't hide it. It was not necessary to hide it. I could tell you what amount of money the bank had on hand before I got th twenty thousand dollars. * * * I mean to say that with that bank that condition I might have in the safe twenty thousand dollars or ten th sand dollars from the night of the 25th, and ten thousand dollars from night of the 26th, and not think to tell the bookkeepers, and not enter it my books, until two or three days afterwards, and then have the book entr made. Those entries were not made for the purpose of having the bank sh a larger amount of money than it had, nor for the purpose of making these ports to the comptroller of the currency. I probably showed the twenty th sand dollars that was in the safe to McCauley and Hedges. I did not sh it to any one else."

The charge of the court with reference to these transactions substantially the same. We copy but one, which is as follows

"Concerning the Hedges transaction, there is testimony to the effect t that particular sum of ten thousand dollars was left with the bank by J. Hedges, for which he received a deposit slip in his name, marked 'speci but with the understanding between him and the defendant that, if the ba should need to use the money, it might do so. You are to determine from evidence what was the nature of the use that was so permitted to be ma and if the evidence convinces you, beyond a reasonable doubt, that the so permitted, and as understood by the defendant, was to make a show of said money, if necessary, to any bank examiner or officer of the gove

Digitized by Google

ment, as if the same were money belonging to the funds of the bank, then you are instructed that the entry of said money upon the books of the bank, as appears in the evidence in this case, was a false entry; but if you find that the use so permitted was that the money was to be considered a loan to the bank, or that it might be considered a loan to the bank, or that it should be mingled with the funds of the bank, as an ordinary deposit, subject to withdrawal by check, in the ordinary course of business, the entry of such item on the books would be lawful and proper."

The jury could not have been misled, as counsel claim, by the use of the words, "a loan to the bank," to be "mingled with its funds," as an "ordinary deposit." These words were used to illustrate the point that, if the money was left with the bank to be used by it in its legitimate banking business, "the entry of such item on the books would be lawful and proper." This portion of the charge was certainly as favorable to the plaintiff in error as the law or the evidence would warrant. It was the character of the transaction, not the name given to it, that determined its true nature; and the jury were to decide, from all the facts, whether the acts of the cashier, in making, or causing to be made, the entries in the books of the bank, in relation thereto, were "honest" or "criminal."

It is argued by counsel that the court erred in giving certain instructions, one inconsistent with the other, in relation to the question of intent. It is true that this question was referred to in different portions of the charge. The court seems to have taken extra pains to inform the jury as to the law upon that subject; but in so doing there was no uncertainty or inconsistency. The intent of the defendant, as charged in the indictment, must, of course, be proven, either by direct, positive, or independent evidence, or by such facts and circumstances as would enable the jury to draw the inference of guilt, as they legitimately are allowed to draw other inferences, from any of the facts in evidence which to their minds fairly prove its existence. The evidence in this case was, notwithstanding the lack of memory upon the part of some of the witnesses for the government, so clear as to leave no reasonable doubt in the minds of the jury as to the inferences and presumptions which naturally flowed from it, viz. that the offense as charged, in making the false entry on the books of the bank, was committed by the plaintiff in error herein with intent to deceive the bank examiner, and that the false reports made by him were made with the intent to deceive the comptroller of the currency. The charge of the court fairly, in language to which no possible exception could be taken, submitted this question to the jury. The court also properly charged the jury that "every one is presumed to intend the necessary consequence of his own deliberate act, and if you believe from the evidence that the entries described in the indictment were false, and that the defendant made, or caused them to be made, and that the necessary result of such entries was to deceive the examiner by the entries in the books, then the defendant is guilty as charged under that count." Is it not reasonable to presume that a cashier of a bank who wrongfully makes or causes such entries to be made intends the legitimate consequences of his

Digitized by Google

unlawful act? Is it not manifest from the entire charge that the jury could not have been misled by the language used in another part of the charge, that "any and every false entry upon the books used in the transaction of its current business is calculated either to mislead its officers or work injury to the bank"? This was but a general statement. Another portion of the charge was so definite and direct that the jury could not possibly have been misled. Among other things, the court said:

"The counts charging the defendant with making false entries in the books of the bank allege that such entries were made, or caused to be made, by the defendant, with the specific intent on the part of the defendant to deceive any agent who might thereafter be appointed by the comptroller of the currency to examine the affairs of said association or bank. The offense charged is a statutory one, and the specific intent alleged in the indictment is a substantive or essential part, and one of the ingredients of such offense; and before you can convict the defendant on any of such counts you must find as a fact, beyond any reasonable doubt, that he not only did the acts charged, but that he did them with the specific intent on his part to deceive any agent who might thereafter be appointed by the comptroller of the currency to examine the affairs of the bank. It will not justify a conviction for you to find from the evidence, if you should be so inclined, that he did the acts charged with some other intent, no matter how wrongful it might be."

The instructions given in the following cases support the charge of the court, and also the general views we have expressed in regard thereto. U. S. v. Harper, 33 Fed. 471, 481; U. S. v. Means, 42 Fed. 599; U. S. v. Allis, 73 Fed. 165, 171. The charge must be read and considered in its entirety; and, so read and considered, it is manifest that the jury could not possibly have been misled in regard thereto.

It is argued that the court erred in not giving a correct definition of a "special deposit." The facts of this case did not call for any legal definition of a "special deposit," as that term is understood in legitimate banking business. The transactions, if they occurred as testified to by Peters, cannot, from any legal standpoint, be classed as legitimate. The intent with which an act is done is often more clearly and conclusively shown by the act itself than by any words or explanation of the actor. It is no defense to a wrongful act, knowingly and intentionally committed, that it was done with an innocent intent. It is often the case that the actions of men speak their intentions more clearly and truthfully than do their words. It is apparent, from the testimony, that the "deposit slips" were not given or received for the purpose of making an entry of any legitimate business of the bank. They were not, according to the evidence of Hedges, McCauley, and Weisbaugh, to be entered in the books of the county treasurer or city treasurer or the German-American Bank. The irregular and extraordinary method of conducting the business was resorted to, if at all, for the purpose of covering up a transaction that would not bear the light of day, and cannot be recognized, by any court, as legitimate. The money did not belong to the bank, and, if left there to be used in the manner testified to by the witnesses, could not, in any legal sense, be designated as the money of the bank, whether called a "loan" or a "special deposit." The entry on the bank's books was evidently designed and intended to deceive the bank examiner, and was, to all intents and

Digitized by Google

purposes, under the most favorable light in which the transactions can be viewed, a "false entry," within the meaning of these words as used in the statute, and any report to the comptroller of the currency based upon such transactions would be a "false report."

Without further discussion, our conclusion is that the plaintiff in error has had a fair and impartial trial; that he has been properly convicted upon the testimony; and that after a careful, patient, and exhaustive consideration of all the points made by counsel, whether herein specifically mentioned or not, we find no error in law in the admission of the evidence, or in the charge or rulings of the court, that calls for, or would justify, a reversal of the case. The judgment of the circuit court is affirmed.

(94 Fed. 155.)

OVERWEIGHT COUNTERBALANCE ELEVATOR CO. v. IMPROVED ORDER OF RED MEN'S HALL ASS'N OF SAN FRANCISCO.

(Circuit Court of Appeals, Ninth Circuit. February 13, 1899.)

No. 470.

1. PATENTS—PLEADING AND EVIDENCE—ANTICIPATIONS.
   There is no error in admitting in evidence a patent of which notice has not been given, under Rev. St. § 4920, where it is introduced, not as an anticipation, but merely to show the prior state of the art, as bearing solely upon the question of infringement.

2. SAME—CONSTRUCTION OF CLAIMS—COMBINATIONS.
   When a specific element is not claimed as a device by itself, but all the claims are for a combination, this is, in effect, an admission that such element was old, and was not invented by the patentee.

3. SAME—INFRINGEMENT OF COMBINATION CLAIMS.
   If the invention claimed be but an improvement on a known machine, by a mere change of form or combination of parts, the patentee cannot treat another as an infringer who has improved the original machine by the use of a different form or combination performing the same functions. The inventor of the first improvement cannot invoke the doctrine of equivalents to suppress all other improvements which are not mere colorable evasions of the first.

4. SAME—EXPERT EVIDENCE—JURY TRIAL.
   Where, in a jury trial, the question is as to whether an element in defendant's machine is the mechanical equivalent of one of the elements in the patented machine, the mere fact that there is testimony by experts that it is such an equivalent does not necessarily require the submission of the case to the jury; for the court is not bound to accept the opinion of experts, but may draw its own conclusions from an inspection of the respective machines or models, and if, in its opinion, the evidence is insufficient to support a verdict for the plaintiff, it may instruct the jury to find for defendant.

5. SAME—ELEVATORS.
   The Hinkle patent, No. 257,943, for an improvement in freight and passenger elevators, construed, and *held* not infringed.

In Error to the Circuit Court of the United States for the Northern District of California.

For opinion of circuit court, see 86 Fed. 338.

Digitized by Google

W. H. H. Hart, S. C. Denson, and H. M. Van Arman, for plaintiff in error.

M. A. Wheaton and I. M. Kalloch, for defendant in error.

Before GILBERT and ROSS, Circuit Judges, and HAWLEY, District Judge.

HAWLEY, District Judge. This is an action at law to recover damages for the alleged infringement of letters patent No. 257,943, issued May 16, 1882, to Philip Hinkle, of San Francisco, Cal., for "an improvement in freight and passenger elevators." The invention claimed by Hinkle is stated in the specifications of the patent, as follows:

"My invention has reference to an arrangement for re-enforcing the lifting power of any given freight or passenger elevator without increasing the working power of the engine or motor that drives it; and it consists in the application of an overbalance counterweight for overbalancing the weight of the cage, and in the interposition between said counterweight and the cage of a self-acting brake, which prevents the superior weight of the counterbalance from being transmitted to the cage and engine power when the engine and cage are standing at rest. The self-acting brake which I use is a worm wheel and worm, which also serves as a gearing for transmitting the power of the engine or motor to the cage and counterweight, all as hereinafter more fully described."

The principle of this double-acting machine is illustrated in the specifications as follows:

"Suppose, for instance, that the cage weighs two hundred pounds and the counterweight four hundred pounds, and suppose that the worm can bear with safety a load of two hundred pounds; I can then raise four hundred pounds in the cage, besides the weight of the cage itself, and the engine will have only two hundred pounds to lift when the cage is raised, and the same amount when the cage is lowered, and the worm gears will at no time be subjected to a strain of more than two hundred pounds, whereas, with a simple balance weight, such as has heretofore been used, no more than the weight of the cage could be used as a counterbalance without having it react to lift the cage as soon as the application of power to the driving shaft ceased. In this latter case I would be able to raise a weight of only two hundred pounds on the cage. It is therefore evident that I am able, by using my overbalance counterweight, to raise twice the amount of weight on a certain size machine as heretofore, or, in other words, it enables me to do the same amount of work with an engine of half the capacity as has been heretofore required. In case it is desired to raise a load of more than ordinary weight, additional weight can be applied to the overbalance to any desired extent, within the limits of strength of the rope and mechanism."

The claims of the patent are:

"(1) In an elevator, the combination, with the hoisting drum, B, of the cage A, and rope, C, thereof, attached to one side of the drum, B, and the overbalance weight, G, and rope, E, thereof, attached to the opposite side of the drum B, substantially as set forth. (2) The combination, with the drum, B, and ropes, C and E, attached to the opposite sides thereof, and suspending the cage and overbalance weight, respectively, of the power shaft, J, provided with the worm, as described, and the worm wheel, I, mounted on the same shaft with B, as set forth."

The defendant in error uses what is known as the "Frazer Elevator."

The assignments of error present two questions for the consideration of this court:

Digitized by Google

1. It is claimed that the court erred in admitting in evidence, against plaintiff's objection, the letters patent No. 185,276, issued December 12, 1876, to W. D. Andrews, for an improvement in hoisting apparatus, which, it is asserted, was claimed by the defendant to be in anticipation of plaintiff's patent, on the ground that no notice had been given to plaintiff that such patent would be offered in evidence, as required by section 4920 of the Revised Statutes. It is true that counsel for the defendant insisted that the Andrews patent was a "full anticipation of the plaintiff's patent." But it was not admitted in evidence for the purpose of proving anticipation. The facts are that upon the cross-examination of Mr. Boone, a witness on behalf of plaintiff, certain questions were asked by defendant's counsel relative to the Andrews patent, which simply tended to show the state of the art, viz. that in the Andrews patent there was a counterpoise for the purpose of balancing the car and its load,—in other words, that there was in the Andrews patent the overbalance weight, which constitutes but one of the elements of the claims in plaintiff's patent. But, in any event, it is clear that no possible injury could have resulted to the plaintiff, even if the Andrews patent had been admitted in evidence, for the reason that the court did not base its instruction to the jury on the ground that plaintiff's patent had been anticipated. The validity of plaintiff's patent was not disputed. The only question considered by the court was whether, upon the facts introduced in evidence, any infringement of plaintiff's patent was shown. When plaintiff closed its case the defendant moved the court to instruct the jury to find a verdict for the defendant "upon the ground that the plaintiff has not proved any infringement," and upon the further ground that plaintiff had not shown any new invention covered by the claims of its patent. The last ground of this motion was expressly overruled by the court, and the motion, upon the first ground, was granted. From the facts shown by the record, it is manifest that the first assignment of error is wholly insufficient to justify a reversal of the case.

2. Did the court err in instructing the jury to find a verdict for the defendant upon the ground that the plaintiff failed to prove any infringement of its patent?

It was claimed by the plaintiff in the court below that there was something new produced in plaintiff's patent, on account of the overbalance counterweight. It was there, as here, argued that the only difference between the Frazer elevator, used by the defendant, and the elevator shown in plaintiff's patent, was that instead of the single drum, worm wheel, and worm shown in plaintiff's patent for transmitting the power and motion from the motor to the cage and counterbalance ropes, the defendant's machine has substituted a different form of a transmitting device. The testimony was mainly directed to this issue, and as to whether the devices or elements used by the defendant's machine were, or not, the mechanical equivalents of those described in the plaintiff's patent. The experts introduced by the plaintiff testified generally that the device in the Frazer elevator, which, it is claimed, was substituted

Digitized by Google

for the single drum, worm wheel, and worm in plaintiff's patent, was, in effect, the mechanical equivalent of those devices, and that it performed the same duties in substantially the same way. Upon this testimony the plaintiff argues that the only question in the case was one of fact,—whether or not the substituted element of the combination of the Frazer elevator was a mechanical equivalent of the elements shown in plaintiff's patent for performing the same duty; that, the testimony of the experts being to the effect that it was, it became the duty of the court to submit that question of fact to the jury; and that the court therefore erred in instructing the jury to find a verdict for the defendant. To sustain this proposition, counsel cite Tucker v. Spalding, 13 Wall. 455; Keyes v. Grant, 118 U. S. 36, 6 Sup. Ct. 974; Humiston v. Wood, 124 U. S. 12, 8 Sup. Ct. 347; Royer v. Belting Co., 135 U. S. 319, 10 Sup. Ct. 833; Coupe v. Royer, 155 U. S. 565, 15 Sup. Ct. 199. It was admitted by the defendant at the trial that there is an overweight counterbalance in the Frazer elevator, and that its office and function are exactly the same as is shown in plaintiff's patent. It would necessarily follow that, if the plaintiff's patent is susceptible of being so construed as being for that device alone, then, of course, it would follow that an infringement was clearly proved, and the judgment should be reversed. But an examination of plaintiff's patent discloses, upon its face, the fact, beyond any possible controversy, that it does not cover the use of an overbalance counterweight as an independent device. Both of its claims are for a combination of elements. The overbalance counterweight is claimed as one mechanical element in a combination with other elements specified in the claims. It certainly cannot consistently be claimed that Hinkle invented the overbalance counterweight. He was introduced as a witness, and upon his cross-examination said:

"A counterbalance to counterpoise against the weight of a cage has been used for years and years,—probably before I was born. All hydraulic elevators used them. I used them, and other elevator builders used them. They were used simply to counterbalance the weight of the cage."

This result ordinarily follows whether there is any testimony upon the point or not. When a specific element is not claimed as a device by itself, it is, in effect, admitted that the particular element is old, and was not invented by the patentee. In 3 Rob. Pat. § 923, it is said:

"A patent claiming a combination only does not protect the elements of which it is composed. If these are old, they are already the property of the public. If they are new inventions of the patentee, his failure to claim them is a concession, so far as this patent is concerned, that they are old."

In the Corn-Planter Patent, 23 Wall. 181, 224, the court said:

"Where a patentee, after describing a machine, claims as his invention a certain combination of elements, or a certain device or part of the machine, this is an implied declaration—as conclusive, so far as that patent is concerned, as if it were expressed—that the specific combination or thing claimed is the only part which the patentee regards as new. True, he or some other person may have a distinct patent for the portions not covered by this; but that will speak for itself. So far as the patent in question is concerned, the remaining parts are old or common and public."

Digitized by Google

See, also, Rowell v. Lindsay, 113 U. S. 97, 102, 5 Sup. Ct. 507, and authorities there cited.

Every element of the combination is presumed to be material, and it is the combination of the elements that is new. As was said in Water-Meter Co. v. Desper, 101 U. S. 332, 337:

"Our law requires the patentee to specify particularly what he claims to be new, and, if he claims a combination of certain elements or parts, we cannot declare that any one of these elements is immaterial. The patentee makes them all material by the restricted form of his claim. We can only decide whether any part omitted by an alleged infringer is supplied by some other device or instrumentality which is its equivalent."

Plaintiff's patent being for a combination, it necessarily follows that there cannot be any infringement, unless the Frazer elevator contains all of the elements of the combination in plaintiff's patent, or their mechanical equivalents. Norton v. Jensen, 33 C. C. A. 141, 90 Fed. 415, 429, and authorities there cited.

In De Loriea v. Whitney, 11 C. C. A. 355, 364, 63 Fed. 611, 620, the court of appeals said:

"The rule, prima, facie, is that, while the use of equivalents for an element in a combination is not lawful, yet a combination which does not include all the elements does not infringe. There may be exceptions where the nature of the invention is of such a primary or broad character that it is plain some of the elements named are unessential; in other words, where the invention is so broad that the range of equivalents will be correspondingly broad, under the liberal construction which the courts give to such inventions. Miller v. Manufacturing Co., 151 U. S. 207, 14 Sup. Ct. 310. But there is no reasonable basis for maintaining, either as a matter of law or fact, that the case is outside of the rule applied to ordinary combinations in Water-Meter Co. v. Desper, 101 U. S. 332; Fay v. Cordesman, 109 U. S. 408, 420, 421, 3 Sup. Ct. 236; Knapp v. Morss, 150 U. S. 221, 228, 229, 14 Sup. Ct. 81; and Dunham v. Manufacturing Co., 154 U. S. 103, 14 Sup. Ct. 986."

There is a clear distinction drawn, in all of the authorities which discuss the question, between a pioneer invention and an invention merely of improvements by a combination of mechanical devices. A patentee who is the original inventor of a device or machine—a pioneer in the art—is entitled to a broad and liberal construction of his claims; but an inventor who only claims to be an improver is only entitled to what he claims, and nothing more. In other words, the original inventor of a device or machine has the right to treat as infringers all who make or use devices or machines operating on the same principle, and performing the same functions by analogous means or equivalent combinations. "But if the invention claimed be itself but an improvement on a known machine, by a mere change of form or combination of parts, the patentee cannot treat another as an infringer who has improved the original machine by use of a different form or combination performing the same functions. The inventor of the first improvement cannot invoke the doctrine of equivalents to suppress all other improvements which are not mere colorable invasions of the first." McCormick v. Talcott, 20 How. 402, 405; Norton v. Jensen, 33 C. C. A. 141, 90 Fed. 415, 422, 423, and authorities there cited.

Touching the question as to whether the Frazer elevator contained all the elements, or the equivalents thereof, of plaintiff's

Digitized by Google

patent, and the effect of the testimony of the experts in regard thereto, the circuit court, among other things, said:

"Testimony has been introduced here that in defendant's machine it is what they call a 'differential result,' * * * but there has not been a witness who has testified in this case that has stated that the operation in the plaintiff's machine was a differential result. There are no motions there that produce that result; no two forces at work that produce that result. It is simply a drum that is set in motion. It winds in one direction and unwinds in the other; again winds up in the other direction, and unwinds as it was in the first place. The Frazer machine has been introduced in evidence. It is here. It is in evidence in this case, and we have been able to see the operations of that machine and the plaintiff's machine. I take it that it does not make any difference what declarations are made by witnesses; if the two things are different, the court should so hold. My opinion is that in this case there is nothing for the jury to decide, and, if it did decide that that was produced by the same means of hoisting in the plaintiff's machine as it was by the defendant's machine, that I ought to set aside a verdict of that kind. It is patent to me they are different. They are not the same means. It is no use to talk about the other parts of the machine, because, as I say, they are admitted to be old. It is only the combination that is new, and, if there is no equivalent used in the plaintiff's machine for every element of that combination, there is no infringement."

Reading the plaintiff's patent in the light of the conditions and usages prevailing, at the time of its inception and issuance, in the art to which the invention relates, and upon examination of the models of the respective machines exhibited to the court, we are of opinion that the conclusions arrived at by the court are correct. The motive power of the two machines is radically different, in their construction and mode of operation. The elements mentioned in the claims of plaintiff's patent are not all found in the Frazer elevator. The plaintiff's elevator operates with a single motor and with a worm gear. The Frazer elevator has no worm gear, and is so constructed that it could not be operated either with a worm gear or with a single motor. The plaintiff's elevator has a drum, around which a rope is wound and unwound. The Frazer elevator has no such drum. In the plaintiff's elevator the drum which transmits the power from the driving motor turns in one direction to raise the cage, and must reverse and turn in the opposite direction to lower the cage. In the Frazer elevator there is no drum or pulley, transmitting the power from the motors, that turns in one direction to raise the cage, and then reverses and turns in another direction to lower the cage. In the light of these and other different mechanisms, which need not be stated, we are of opinion that, notwithstanding the general opinions and conclusions expressed by the expert witnesses, the plaintiff's patent is not infringed by the use of the Frazer elevator.

The court certainly has the unquestioned right to draw its own conclusions from an exhibition and inspection of the respective machines, or models thereof, as well as from the opinions of expert witnesses. It is not bound to accept such testimony as conclusive. The Conqueror, 166 U. S. 111, 131, 17 Sup. Ct. 510. It considers the facts upon which the opinions of the witnesses are based, and determines from all the evidence in the case whether the conclusions given by the witnesses are sound and substantial. The value of expert testi-

Digitized by Google

mony generally depends upon the facts stated as a reason for their opinions and conclusions. Green v. Terwilliger, 56 Fed. 384, 394; 1 Tayl. Ev. § 58. More weight is given to the testimony of a witness based upon facts within his own knowledge and experience than to the testimony of a witness which is "largely the assertion of a theory." Béné v. Jeantet, 129 U. S. 683, 688, 9 Sup. Ct. 428. In 3 Rob. Pat. § 1012, the author, in discussing this subject, says:

"That there are experts in other departments of affairs upon whose opinion the court is forced to rely as the foundation of its own judgments, because incapable of forming an opinion for itself, and that such experts consequently fill the places of judges, and should be beyond the influence and control of parties, must be conceded. But such is not the case with patent experts, whose opinion is received in evidence only in connection with the reasons on which it is based, and is to be accepted or rejected by the jury according to their own view of its fallacy or truth. * * * Their statements of fact are simply to be weighed, like those of all other witnesses, by their ability and disposition to disclose the truth; and their opinions are to be followed when, in the judgment of the jury, they are supported by the facts from which they are deduced."

See Walk. Pat. (2d Ed.) § 498.

The law is now well settled that the trial court not only has the power, but it is its duty, where the evidence is insufficient to support a verdict in favor of the plaintiff, to instruct the jury to find a verdict in favor of the defendant. This rule applies to patent as well as other cases, and is as applicable to the question of infringement as to any other material or controlling question involved in the case. In 3 Rob. Pat. § 1014, it is said:

"If an inspection of the invention practiced by the defendant, in connection with the one described and claimed in the patent, satisfies the court that there has been no infringement, * * * there is no occasion for extraneous evidence, and the court should direct the jury to return a verdict for the defendant without further inquiry. * * * Neither a court nor a jury are permitted to follow the guidance of any expert, in defiance of the results of practical operation and experiment, nor against conclusions derived by necessary inferences from established facts." Walk. Pat. (2d Ed.) § 536; Fond du Lac Co. v. May, 137 U. S. 395, 403, 11 Sup. Ct. 98; Railway Co. v. Rowley, 155 U. S. 621, 630, 15 Sup. Ct. 224; Black Diamond Coal-Min. Co. v. Excelsior Coal Co., 156 U. S. 611, 618, 15 Sup. Ct. 482; De Loriea v. Whitney, 11 C. C. A. 355, 63 Fed. 611, 617; Cramer v. Fry, 68 Fed. 201, 212; Chapman v. Lumber Co., 32 C. C. A. 402, 89 Fed. 903, 905, and authorities there cited.

This principle is recognized in Royer v. Belting Co., 135 U. S. 319, 10 Sup. Ct. 833, and is not denied in any of the other cases cited and relied upon by plaintiff. The judgment of the circuit court is affirmed, with costs.

Digitized by Google

(94 Fed. 177.)

ROSE v. HIRSH et al.

(Circuit Court of Appeals, Third Circuit. May 4, 1899.)

No. 26, March Term.

1. PATENTS—INFRINGEMENT—MEASURE OF DAMAGES.
   Where the patentee himself manufactures the patented article, and maintains a close monopoly, so that one desiring to use it could purchase it only from him, it is proper, in case of wanton infringement, to conclude that but for the infringement the infringer would have purchased the articles from the patentee, and consequently that the latter is entitled to all damages resulting from the loss of such sales.
2. SAME—WANTON INFRINGEMENTS.
   In cases of wanton infringement, any doubt arising in respect to the sufficiency of the evidence to warrant a finding of the amount of damages is to be resolved against the infringer.
3. SAME—COMPUTATION OF DAMAGES.
   In a case of wanton infringement, where it appeared that defendant had made and used a certain number of the infringing articles, and that the business of manufacturing the patented article as carried on by the patentee was one in which the expenses of manufacture could be readily computed, *held*, that he was entitled to recover the difference between the cost of manufacture, as shown by his evidence, and his established selling price, in the absence of any evidence contradicting his figures; especially when, if successful contradiction were possible, it lay within defendant's power to furnish the evidence.

Appeal from the Circuit Court of the United States for the Eastern District of Pennsylvania.

Henry E. Everding, for appellant.
Wm. C. Strawbridge, for appellees.

Before ACHESON, Circuit Judge, and KIRKPATRICK and BUFFINGTON, District Judges.

BUFFINGTON, District Judge. This is an appeal from a decree entered by the circuit court of the Eastern district of Pennsylvania dismissing exceptions to and confirming the report of a master. 91 Fed. 149. After entry by that court of a decree adjudging appellees to have infringed the first claim of patent No. 504,944, granted to John Rose, the appellant, a master was appointed to state an account of the gains and profits which the appellees received, and the damages sustained by the appellant by reason of said infringement. The master found that the appellees had used a considerable quantity of rods containing the patented device, as to which he reported: "The complainant evidently has been damaged by the defendants' use of the infringing rods, but the evidence presents no definite basis on which such damages can be assessed." He therefore reported but nominal damages, and ordered appellant to pay the costs of the accounting. To this report appellant excepted. On hearing, the exceptions were dismissed, the report confirmed, and a decree entered in conformity with the master's recommendations. The entry of said decree is here assigned for error.

The proofs show that the patented article was a completed umbrella stick. Appellees' bookkeeper testified that they had used 121

Digitized by Google

gross of such infringing rods. It is also shown that prior to November, 1894, the patented rod could not be purchased, except from appellant, who alone made them, and who maintained a close monopoly of their manufacture, and that appellees purchased such rods from him, and thus acquiesced in the monopoly of his patent from 1891 to June 20, 1894. At the latter date they ceased buying from appellant, and thereafter deliberately infringed his patent, until enjoined in this case. During the last five months they purchased, viz. from January 23 to June 20, 1894, they bought from Rose 123 gross at prices ranging from $24 to $28. Analysis of these bills shows that for said period the price was substantially $24 per gross; for of 19 different invoices 15 were at $24, and these covered 118 gross, while the two at $26 and $28, respectively, aggregated but 4⅓ gross. There was no evidence that Rose, prior to November, 1894, sold to any one at a less price than $24 per gross. In November, 1894, appellees began purchasing from Riehl, who was theretofore connected with appellant's business, and from him and other infringing makers, down to November, 1896, when they were enjoined, bought and used 121 gross of the infringing rods. During this time appellees were contesting the validity of Rose's patent in the present case. That the appellees regarded the rods as desirable is shown by their continuous purchase and use of them, through infringing makers, up to the time they were enjoined. Under these facts and conditions,—the appellant manufacturing rods, and maintaining, until the appellees began infringing, a close monopoly, and the appellees, who were users, having for more than three years purchased all their Rose patent rods from him alone, and having thereafter continued to use rods containing the patented device in their business,—it is reasonable to conclude that, if the appellees had not deliberately and wantonly become infringers, and wrongfully trespassed on appellant's patent rights, they would have purchased from appellant the rods they used. Moreover, the law is that in cases of wanton infringement every doubt is to be resolved against the infringer. Rubber Co. v. Goodyear, 9 Wall. 803. These facts unite to afford substantial, not mere conjectural, grounds on which to base the conclusion that the appellant, by appellees' wrongful acts, lost the sale of these particular rods, and to that extent assuredly was damaged. Creamer v. Bowers, 35 Fed. 209; Covert v. Sargent, 38 Fed. 237.

The appellees having, then, in fact wrongfully deprived the appellant of the sale of 121 gross of the patented article, the patentee has a right to be reimbursed for all damages resulting therefrom. While finding such was the appellant's right, the master, as we have seen, thought the evidence presented no definite basis on which damages could be assessed. When the facts and circumstances attending this case are considered, it seems to us the master was in this regard in error. The proofs show that the appellant carried on his business in a small way. He was in rented premises. The value of his plant did not exceed $300. He was an assembler of parts made by others, rather than a manufacturer himself. He had no salesmen, carried no insurance, had no clerical help, and sold, packed, and delivered his finished product himself. His customers were few and solvent. His

Digitized by Google

operations, being simple, afforded a comparatively easy basis for d termining operative cost. Moreover, the bulk of the work and all of t stock were done or furnished by other manufacturers at fixed pric For these items he produced bills, the accuracy of which is not que tioned. In this way alone he accounted for $10.01 of the total man facturing price of $10.37, to which he testified. These items wer Tubing, $7.63; enameling, $2.16; and springs, 22 cents per gro The remaining ones were 18 cents for labor, and a like sum for ru ning expenses. This last item, he testified, was a due proporti of his rent and other general expenses, which, as we have seen, we of an unusually simple character. The proofs show that the lab was done by some three boys, who, while they worked by the day, we able to turn out a known amount per diem. The appellant testifi that no labor book was kept, and there was therefore no failure his part to produce any evidence bearing on the cost of labor with his power. It would therefore seem that the figures fixing these t items, to which alone any possible element of uncertainty could atta were under the proofs reasonably certain; nor was their correctne qualified by cross-examination. But the appellant's affirmative pro on this question does not stand alone. The correctness of the figur testified to by him is strengthened and substantially corroborated the admitted business operations of the appellees, as well as by the omission to use means without their power to contradict them, indeed, successful contradiction was possible. If the cost of his ma ufacturing operations was falsely understated by Rose, the app lees had it in their power to have contradicted him by Riehl, w had been connected with Rose in his business, who was cognizant the cost of Rose's manufacturing, as well as of his own subseque independent work. As a conjoint infringer with Hirsh, he was p sumably hostile to Rose. Not only did they fail to call him, but th failed to call other manufacturing infringers whose output th bought, who certainly knew the actual cost of making similar ro The fact that appellees bought like rods from those manufacturers $7 and $8 per gross affords convincing corroboration that the cost $10.37, testified to by Rose, was correct.

The facts we have stated being in evidence, the master was ful justified in finding, as we do, and especially so in the absence of counter proof by the appellees, that the appellan wrongful impairment of his sales, was damaged to the extent of t difference between the cost price of $10.37 and the selling price esta lished as between these parties, viz. $24. This, on the 121 gro wrongfully used, was $1,649.23. On this sum interest should be lowed from May 31, 1898,—the date of the filing of the master's port. Tilghman v. Proctor, 125 U. S. 161, 8 Sup. Ct. 894. It is the fore ordered that the decree of the court below be reversed, and t record remanded, with directions to enter a decree in favor of t appellant, together with interest from May 31, 1898, and costs the bill, accounting, and this appeal.

Digitized by Google

(94 Fed. 180.)

PACIFIC COAST S. S. CO. v. BANCROFT-WHITNEY CO. et al.

(Circuit Court of Appeals, Ninth Circuit. February 6, 1899.)

No. 454.

1. ADMIRALTY—JURISDICTION IN REM—TIME OF SEIZURE.
A court of admiralty acquires its jurisdiction over a libel in rem for breach of a contract of affreightment by the filing of the libel, and it is immaterial that the vessel is not within the territorial limits of the court at that time, where she is subsequently seized therein on alias monition.

2. SHIPPING—BILL OF LADING—CONSTRUCTION.
Exceptions in a bill of lading introduced by the shipowners themselves in their own favor are to be construed most strongly against them.

3. SAME—STIPULATIONS FOR PRESENTING CLAIMS.
A provision in the shipping receipts that all claims against the steamship company or any of its stockholders for damage to the goods must be presented within 30 days from the date thereof, as a condition precedent to suing the company or its stockholders, does not cover the right to maintain a suit in rem against the ship, in which the company appears as claimant.

4. SAME—REASONABLENESS OF LIMITATION.
A provision in a bill of lading requiring all claims for damages to be presented within 30 days from the date thereof makes the period of limitation unreasonably short, and is therefore void.

5. SAME—ESTOPPEL TO DENY VALIDITY.
A shipper is not estopped to deny the validity of a provision of a bill of lading on the ground of its unreasonableness, since he does not stand on an equal footing with the carrier in accepting the bill of lading.

6. ADMIRALTY—STATE STATUTES OF LIMITATION.
In the exercise of their admiralty and maritime jurisdiction, the United States courts are governed solely by the legislation of congress and the general principles of maritime law. Accordingly, they are not bound by state statutes of limitation.

7. SAME—LIENS.
In a suit to enforce a lien given by the general maritime law for damage to cargo, a limitation of one year contained in the Code of Civil Procedure of California (section 813), which gives a lien for injuries to goods shipped on board a vessel, does not apply, although the bill of lading was signed within that state before the goods were shipped, and the freight was to be delivered at a port therein.

8. SAME—LACHES.
Mere delay for the full period of four years allowed by the state statutes of limitation, in bringing a suit in rem to recover damages to cargo, is not, of itself, and in the absence of exceptional circumstances from which laches would be imputable, sufficient to justify the court in declining to entertain the suit.

9. CARRIERS—DAMAGE TO GOODS—ASCERTAINMENT—AUCTION.
Sale by auction in a great mart of commerce is a proper method of determining the value of goods damaged in the hands of a carrier.

10. WITNESSES—RIGHT TO REFRESH MEMORY.
A witness may refresh his memory by the use of any written memorandum, although it was not made by himself, if he saw it while the facts therein stated were fresh in his recollection, and he knew that the memorandum as then made was correct.

11. INSURANCE—SUBROGATION—PARTNERSHIP—DISSOLUTION.
An insurance company which has paid a loss upon partnership goods is not prevented, by the subsequent death of one of the partners and the

Digitized by Google

resulting dissolution of the firm, from maintaining a suit in admiralty, in the partnership name, to recover the amount of the loss from the carrier.

12. SHIPPING—INJURY TO GOODS—ACTIONS—CONTRACT AND TORT.
A libel alleged a delivery of goods to a carrier pursuant to a contract of affreightment; that, notwithstanding the contract, the goods were not redelivered to libelants in like good order as received, "but, on the contrary, said merchandise was returned to said port" of shipment "in a greatly damaged condition, by reason of having been wet with sea water during said voyage, which, by reason of the negligence of" the carrier, "gained access to the interior of said ship, where said merchandise was stowed"; and "that, in consequence of the injury and damage to said merchandise, the libelants have sustained damage," etc. *Held*, that the action was not founded upon a tort, but upon the contract of affreightment, and that the claim for damages was based upon the failure of the carrier to deliver the merchandise in good condition; the averment as to negligence being merely illustrative of the manner in which the goods were damaged.

13. SAME—LIABILITY FOR INJURY.
Common carriers by water are in the nature of insurers, and are liable for every loss or damage, however occasioned, unless it happens from the act of God or the public enemy, or by the act of the shipper, or from some other cause or accident expressly excepted in the bill of lading.

14. SAME—BURDEN OF PROOF.
Where merchandise is shipped, and the usual bill of lading given, promising to deliver the same in good order, the dangers of the sea excepted, and the goods are found to be damaged, the burden of proof is upon the owner of the vessel to show that the injury was occasioned by one of the excepted causes.

15. SAME—UNSEAWORTHINESS—LATENT DEFECTS.
In every contract for the carriage of goods by sea, there is a warranty on the part of the shipowner that the ship is seaworthy at the time of beginning her voyage, and his undertaking to safely carry the goods cannot be discharged because the want of fitness in the vessel is the result of latent defects.

16. SAME—PRESUMPTIONS.
Although it may be presumed that a vessel is seaworthy when she sails, if soon thereafter a leak is found, without the ship having encountered a peril sufficient to account for it, the presumption is that she was not seaworthy when she sailed.

17. SAME—INJURY TO GOODS—PROXIMATE CAUSE.
Where a steamer was run upon the beach solely because a leak had been discovered which could not be controlled, and water immediately came in over her deck, so that merchandise was injured, the proximate cause of the injury was the leak, and not the stranding of the vessel.

18. EVIDENCE—PRESUMPTIONS—FAILURE TO PROVE KNOWN FACTS.
When the circumstances in proof tend to fix a liability on a party who has it in his power to offer evidence of all the facts as they existed, and rebut the inferences which the circumstances in proof tend to establish, and he fails to offer such proof, the natural conclusion is that the proof, if produced, would support the inferences against him.

19. SHIPPING—PERILS OF THE SEA—EXCEPTIONS IN BILL OF LADING—BURDEN OF PROOF.
A steamer, alleged by her claimants to have been stanch, strong, and seaworthy, and fully manned, officered, and equipped, was discovered, after being only 11 hours at sea in fair weather, to have a list, due to sea water in her between-decks. The water increased so rapidly that a few hours later it was decided to run for a harbor of refuge, where the ship was at once beached to prevent foundering. *Held*, in an action for damage to the cargo, that the burden was on the carrier to show wherein and how the leak arose, so as to bring the loss within the exception in the bill of lading as to perils of the sea.

Digitized by Google

20. SAME.

That burden was not discharged by simply showing that the ship was in a seaworthy condition at the commencement of the voyage, and presenting evidence which merely left in doubt the question as to how the leak arose.

21. SAME—TRIAL—POWER OF COURT TO COMPEL EVIDENCE.

Rather than decide the case on the legal presumptions arising from the proof, the court might have compelled the carrier to show the cause of the leak, if known, though inconsistent with the theory on which the parties were trying the case.

Appeal from the District Court of the United States for the Northern District of California.

This is a libel in rem, by shippers of goods shipped on board the steamer Queen of the Pacific, belonging to the claimants herein, to recover damages for breach of contract of affreightment. There were a large number of libels filed, which, being of the same nature, were consolidated. The respective proctors agreed to select two cases—those of the Bancroft-Whitney Company and Hellman, Haas & Co.—for trial, as it was believed they would fairly present all the questions of law and fact that might arise in the other cases; the disposition of the others to be subject to subsequent arrangement after the final decision herein.

The libelants aver, in substance, that on or about the 28th day of April, 1888, the goods alleged to have been damaged were shipped, in apparent good order and condition, on board the steamship Queen, at the port of San Francisco, for transportation to the port of San Diego, Cal., there to be delivered in like good order and condition; that at said time the Pacific Coast Steamship Company, claimant herein, entered into a contract of affreightment with libelants for the delivery of the goods, certain perils in said agreement excepted; that the Queen sailed for San Diego with said merchandise on board; that, notwithstanding said contract of affreightment, said merchandise was not delivered to libelants, at said port, or at any other place, in like good order as received, "but, on the contrary, said merchandise was returned to said port of San Francisco in a greatly damaged condition, by reason of having been wet with sea water during said voyage, which, by reason of the negligence of said steamship company, its officers and servants, gained access to the interior of said ship, where said merchandise was stowed, to wit, on or about the 30th day of April, A. D. 1888"; that said steamship is now in the Northern district of California; that, in consequence of the injury and damage to said merchandise, the libelants have sustained damage, etc. Exceptions were filed to the libels by the claimant of the vessel, which were overruled by the court. The Queen of the Pacific, 61 Fed. 213. The claimant then filed answers to the libels. The answers admit that the said merchandise was received on board the Queen, and was not delivered at San Diego, and that it was returned to San Francisco, and was damaged by reason of having been wet with sea water; but deny "that the same was so wet with sea water during said voyage, or by reason of the negligence of said steamship company, its officers and servants, or either of them; and deny that by reason of such, or any such, negligence, sea water, or any water, gained access to the interior of said ship, where said merchandise was stowed," or at any time, or at all; deny that at the time the libels were filed the said steamship was in the Northern district of California; and aver that for four days prior thereto, and continuously thereafter, the said ship was without the Northern district of California; deny all damages. And, for a further and separate answer and defense, the claimant alleges "that said steamship Queen of the Pacific was, when she sailed from said port of San Francisco, as in said libel alleged, stout, stanch, strong, and in every respect seaworthy, and in such condition sailed from said port of San Francisco, fully and completely manned, officered, and equipped for her intended voyage, and with merchandise on freight, and a large number of * * * passengers on board of her; that she left * * * San Francisco at about the hour of 2 o'clock p. m. of April 29, 1888; * * * that no unusual incident was known to occur during said 29th of April, 1888; that, about 1 o'clock a. m. of

Digitized by Google

the 30th of April, said steamship was noticed to have a slight list to starboard; that efforts were then made to correct such list by shifting freight to port in the between-decks, and burning coal mostly from the starboard bunkers; that about 2:15 or 2:30 o'clock a. m. of Monday, April 30, 1888, water was discovered to be dropping from a point in the iron bulkhead on the starboard side of the engine room, and about six (6) or eight (8) inches above the deck of the alleyway in the between-decks of the vessel; that an examination then made resulted in water being found in the between-decks of the steamship aft, such water extending about halfway from the side of the ship to the hatch coamings, but the aperture through which such water entered the vessel could not, after diligent search for the same, be discovered; that seamen were put to work passing such water down the hatches into the hold, so as to bring it within reach of the bilge pumps, and such pumps were kept in operation, notwithstanding which the water steadily increased between-decks, and the list of the vessel became so great that about the hour of 5 o'clock a. m. it was deemed by the master of said vessel prudent to make for Port Harford with all convenient speed, which was done, and the said vessel at about the hour of 7 o'clock a. m. of said 30th day of April, 1888, was run upon the beach at said Port Harford, at which place sea water immediately came in over her deck, and nearly filled the vessel with water, and thereby said merchandise became wet with sea water; that the beaching of said steamship was necessary to prevent and avoid a total loss of said steamship, and of all the said merchandise then on board of her, and was done by the master thereof as the result of cool deliberation, and in the exercise of a wise discretion on his part as to what was best to be done, and with the purpose of saving said vessel and cargo, and of rendering entirely safe the lives of all the persons, passengers and crew, 212 in number, then on board of said steamship; that the said Pacific Coast Steamship Company, owner of said steamship, did at all times, and immediately prior to the sailing of said steamship from the said port of San Francisco with such merchandise on board of her, exercise due diligence to make the said steamship in all respects seaworthy, and properly manned, equipped, and supplied for her then intended voyage, to wit, a voyage to San Diego and way ports, and return; that the crew of said steamship was composed, during the times referred to, of persons competent to discharge the duties pertaining to their several stations on board said vessel"; that said merchandise was delivered to, received and carried by, the claimant, under and in pursuance of the laws of the state of California, and the provisions of special contracts made by the libelants and the claimant; and that said merchandise was damaged, if at all, in said state. And, for a still further and separate defense, claimant alleges: That the libels are barred by the laches of the libelants in the prosecution of the same, by the terms of the contract alleged in said libels, which reads as follows: "It is expressly agreed that all claims against the P. C. S. S. Co., or any of the stockholders of said company, for damages to, or loss of, any of the within merchandise, must be presented to the company within thirty days from date hereof, and that, after thirty days from date hereof, no action, suit, or proceeding in any court of justice shall be brought against said P. C. S. S. Co., or any of the stockholders thereof, for any damage to, or loss of, said merchandise; and the lapse of said thirty days shall be deemed a conclusive bar and release of all right to recover against said company, or any of the stockholders thereof, for any such damage or loss." That libelants did not present, or cause to be presented, to said company, within such 30 days, their claims for the damages, or any part thereof, as in said libels alleged; nor was this, or any, proceeding commenced in any court within said 30 days, nor at any time prior to the 28th of April, 1892, at which time said steamship was not within the Northern district of California; nor was said steamship seized by the marshal under process until the 4th of May, 1892. That the libels are barred by the provisions of sections 337 and 338 of the Code of Civil Procedure of the state of California. That the same are barred by laches on the part of libelants, by delay in the prosecution of the same for such length of time as constitutes, and is, a bar to a recovery thereof in a court of admiralty.

Under the issues as thus presented, the proctor for libelants at the trial contented himself with introducing the shipping receipts as evidence of the ap-

Digitized by Google

parent good order and condition of the goods when delivered to the carrier for shipment, and, after offering some testimony as to the damaged state of the shipment of Hellman, Haas & Co., rested their case. Thereupon claimant moved for a judgment in his favor, which was overruled by the court (The Queen of the Pacific, 75 Fed. 74); and then the claimant introduced evidence in support of the averments in the answer. This evidence did not disclose the cause of the leak, nor the exact locality where the water gained access to the vessel. The court, upon the final hearing, rendered a decree in favor of libelants. The Queen, 78 Fed. 155.

George W. Towle, Jr., for appellant.
Milton Andros, for appellees.

Before GILBERT and ROSS, Circuit Judges, and HAWLEY, District Judge.

HAWLEY, District Judge (after stating the facts). The libel of each libelant is in rem against the steamer Queen of the Pacific, owned by the claimant, to recover damages for a breach of contract of affreightment, for the safe delivery of certain merchandise, in apparent good order and condition, at the port of San Diego. There are two libels, but in the discussion we shall mainly refer to but one, and the Queen of the Pacific will be mentioned as the "Queen." By a reference to the pleadings, it will be observed that there are numerous preliminary questions as to the right of the libelant to recover. These will first be discussed.

1. It is argued by the appellant that, the libelant having failed to prove that the steamer Queen was within the Northern district of California at the time the libel was filed, the court had no jurisdiction to enter any decree. This question rests upon the averment in the libel that the steamer was within the district, and the averment in the answer of the claimant that it was not. It is claimed that no evidence was offered in support of these averments, and that the burden of proof was upon the libelant to make proof in regard thereto. The learned judge who tried this case, in his opinion, stated that there was some evidence to the effect that the steamer was within the district at that time. But, be that as it may, we are of opinion that its presence or absence at that time, in the light of the other facts to which we shall refer, is wholly immaterial in order to confer jurisdiction. Conceding that no jurisdiction can be conferred in such a case until there is a seizure made within the limits of the territorial jurisdiction of the court, it does not follow that the steamer must be within such limits at the time the libel is filed. The court acquires its jurisdiction over an action upon a maritime contract of affreightment by the filing of the libel. It obtains jurisdiction over the res by a seizure of the steamer, made at that time or thereafter, within the district. The facts are that the monition was first returned not served, the steamer being without the jurisdiction of the court. An alias monition was thereafter issued, and returned served within the district. The court, having jurisdiction of the subject-matter, obtained jurisdiction over the res when it was attached by the marshal upon the alias monition. The jurisdiction of the court over the cause of action is different from its jurisdiction over the person or over the res. The jurisdiction acquired in the first case is obtained by service of process on the person;

Digitized by Google

and in the second, by a seizure of the res. After the libel is filed, and process issued thereon, the court cannot proceed until, in the one case, the person has been served or appears, and, in the other, until there is an actual seizure of the res. In Cooper v. Reynolds, 10 Wall. 308, 316, the court said:

"By 'jurisdiction over the subject-matter' is meant the nature of the cause of action and of the relief sought; and this is conferred by the sovereign authority which organizes the court, and is to be sought for in the general nature of its powers, or in authority specially conferred. Jurisdiction of the person is obtained by the service of process, or by the voluntary appearance of the party in the progress of the cause. Jurisdiction of the res is obtained by a seizure under process of the court, whereby it is held to abide such order as the court may make concerning it. The power to render the decree or judgment which the court may undertake to make in the particular cause depends upon the nature and extent of the authority vested in it by law in regard to the subject-matter of the cause."

There are numerous cases where process in rem has been issued by a federal court where the res was within the hands of a state court of co-ordinate jurisdiction. In such cases the federal court refused to dismiss the libel, but postponed action thereon until the proceedings in such court of co-ordinate jurisdiction were terminated. The E. L. Cain, 45 Fed. 367; Moran v. Sturges, 154 U. S. 256, 279, 14 Sup. Ct. 1019; Ex parte Chetwood, 165 U. S. 443, 460, 17 Sup. Ct. 385; Ex parte Johnson, 167 U. S. 120, 125, 17 Sup. Ct. 735. It must be admitted that in such cases the res is as much without the jurisdiction of the federal court as if it were without the district.

The objection to the jurisdiction of the court is not well founded.

2. The appellant claims that the proceedings against the Queen in rem are, in substance and effect, proceedings against the Pacific Coast Steamship Company, within the true intent and meaning of the special contract set out in the pleadings, and that the claimant is released by the 30-day clause of the special contract. This contention cannot be sustained. As a general rule, it may be conceded that a proceeding in rem cannot be maintained against an offending steamer, where there is no liability upon the part of the owner of the steamer to pay the libelant's claim. But the libelant is not compelled to proceed directly against the owner. He may enforce his lien against the steamer. There is a clear distinction between the two proceedings. A proceeding in rem is to enforce a lien against the offending steamer, irrespective of the ownership of it, and no personal judgment can be entered against the shipowner as such. The decree in a proceeding in rem is enforced directly against the res, by a condemnation and sale thereof, or against the obligors on the bond that stands in the place of the res, and for the purposes of the judgment is the res, while a proceeding in personam is direct against the shipowner to enforce his personal liability for a debt, wholly irrespective of any lien on the ship, growing out of the maritime contract on which the proceeding is founded. The present proceeding is not against the claimant company, or its stockholders, to enforce the payment of a debt, but it is to foreclose a lien against a steamer in which they claim an interest. The fact that the company appears and interposes a claim to the steamer does not change the legal nature of the proceeding from one in rem to one in

Digitized by Google

personam, so as to bring it within the terms of the special contract on the back of the bill of lading, which are to be contra proferentes. In Leon v. Galceran, 11 Wall. 185, 189, where a writ of sequestration had been issued, under the laws of the state of Louisiana, against a vessel, to enforce the payment of the seamen's wages, the court said:

"Neither the writ of sequestration nor the process of attachment is a proceeding in rem, as known and practiced in the admiralty, nor do they bear any analogy whatever to such a proceeding, as a suit in all such cases is a suit against the owner of the property, and not against the property as an offending thing, as in case where the libel is in rem in the admiralty court to enforce a maritime lien in the property."

The contract relied upon by appellant is in the nature of a statute of limitations, prohibiting, after the lapse of a certain period, the bringing of any suit or proceeding against the Pacific Coast Steamship Company, or against any of its stockholders, to recover damages for loss or injury to the merchandise specified in the bill of lading. It will be observed that nothing is said in the contract against the right of the shipper to enforce any lien against the ship. Is it not fair to presume that, if the steamship company intended to include in this limitation a proceeding in rem against its steamship, it would have expressed this intention in language unambiguous, clear, definite, and certain? The fact that it has not done so is to be construed most strongly against it. The rule of strict construction is always applied to such exceptions. Conditions in policies of insurance furnish the true rule upon this subject. The courts have universally held that as the insurance company prepares the contract, and embodies in it such conditions as it deems proper, it is in duty bound to use language, in the various provisions of the policy, in such a manner that the insured cannot be mistaken or misled as to the duties and burdens thereby imposed; and in case of any doubt or uncertainty as to the meaning of the words, or of inconsistent or contradictory provisions in the policy, they are to be construed most strongly against the company. Palmer v. Insurance Co., 1 Story, 360, Fed. Cas. No. 10,698; Steel v. Insurance Co., 51 Fed. 715, 722, and authorities there cited. In The Caledonia, 157 U. S. 124, 137, 15 Sup. Ct. 537, the court said: "As the exceptions were introduced by the shipowners themselves in their own favor, they are to be construed most strongly against them."

We are of opinion that the 30-day clause in the bill of lading has no application to this proceeding; but, even if it could be held that the limitation clause in the contract was applicable, it would not constitute a bar, because the limitation of time therein specified is unreasonable. Admitting that a common carrier of goods has a right to adopt rules fixing the time within which the shipper must present his claim or bring his action for damages, it does not follow that this is an arbitrary right, or that the clause in the bill of lading in the present case is reasonable. The date of the bill of lading is the date when the goods were received. The carrier might, in transporting the goods, meet with unavoidable accidents, or delay in delivering the same at the port designated, and might thereafter lose or damage the goods. The amount of the damage, if only partial, could not probably be ascertained for several days

Digitized by Google

or weeks, depending upon the special circumstances of the case, and it would be unjust and unreasonable to limit the time of instituting proceedings from the date the goods were received. The limitation ought, in justice and fairness to all parties concerned, to be limited, at least, from the time when the loss or damage occurred. If not, to the time when the shipper had knowledge thereof; and a reasonable time thereafter should be given, within which the claim must be presented, or action brought thereon.

The appellees are not estopped from enforcing this rule of construction against the steamship company. As was said in Liverpool & G. W. Steam Co. v. Phenix Ins. Co., 129 U. S. 397, 441, 9 Sup. Ct. 471:

"The carrier and his customer do not stand upon a footing of equality. The individual customer has no real freedom of choice. He cannot afford to higgle or stand out, and seek redress in the courts. He prefers rather to accept any bill of lading, or to sign any paper, that the carrier presents; and in most cases he has no alternative but to do this, or to abandon his business. Special contracts between the carrier and the customer, the terms of which are just and reasonable, and not contrary to public policy, are upheld,—such as those exempting a carrier from responsibility for losses happening from accident, or from dangers of navigation that no human skill or diligence can guard against. * * * But the law does not allow a public carrier to abandon altogether his obligations to the public, and to stipulate for exemptions which are unreasonable and improper, amounting to an abrogation of the essential duties of his employment."

In Express Co. v. Darnell (Tex. Sup.) 6 S. W. 765–767, a limitation clause of 60 days from the time when the bill of lading was given was held to be unreasonable. The court, in discussing this question, said:

"Any reasonable limitation contained in the bill of lading would be upheld by the court. But it has been decided by this court that an unreasonable restriction is not valid, even in cases to which our statute does not apply. Railroad Co. v. Harris, 67 Tex. 166, 2 S. W. 574. Is this a reasonable limitation? We think not. If it had been stipulated that a claim should be made in 60 days from the ascertainment of the loss, the case would have been different. But to require a shipper to give notice of his claim within a short period of the date of the bill of lading, without reference to the time when a loss for the breach of the contract accrued, is to impose a restriction which in many cases would deny a right of action, and thereby permit the carrier to contract against his negligence, which is never allowed."

3. The questions raised by appellant as to the applicability and effect of the sections of the Code of Civil Procedure and statute of limitations, and the alleged laches of the libelant in the diligent prosecution of his claim, will be considered together.

The fact that the bill of lading was signed within the state of California, before the goods were shipped on board the Queen, and that the freight was to be delivered at a port within the state, does not bring the contract within the provisions of the statutes of California. The libelants did not bring this suit to enforce any lien given by the state statute; and hence the provision of section 813 of the Code of Civil Procedure of California, relative to the time of bringing actions against steamers, vessels, and boats, which declares that "such liens only continue in force for the period of one year from the time the cause of action accrued," as well as the

Digitized by Google

other provisions of the Code cited by counsel, have no application. These libels were brought under, and by virtue of, the maritime laws of the United States. In the exercise of their admiralty and maritime jurisdiction, the United States courts are governed solely by the legislation of congress and the general principles of maritime law, and are not bound by state statutes. New Zealand Ins. Co. v. Earnmoor Steamship Co., 24 C. C. A. 644, 79 Fed. 368; Willard v. Dorr, 3 Mason, 91, Fed. Cas. No. 17,679; Brown v. Jones, 2 Gall. 477, 481, Fed. Cas. No. 2,017; The Key City, 14 Wall. 653.

In The J. E. Rumbell, 148 U. S. 1, 12, 13 Sup. Ct. 500, the court said:

"The admiralty and maritime jurisdiction is conferred on the courts of the United States by the constitution, and cannot be enlarged or restricted by the legislation of a state. No state legislation, therefore, can bring within the admiralty jurisdiction of the national courts a subject not maritime in its nature." The Glide, 167 U. S. 606, 622, 17 Sup. Ct. 930.

The question of laches, however, is applicable to courts of admiralty, and should be governed by the general principles of equity in regard thereto. No general principle of equity is better settled than the one which declares that a party must not be permitted to sleep over his rights, to the prejudice of the party against whom he makes a claim, who by the delay may be deprived of the evidence and means of effectively defending himself. But the question as to what is to be considered a reasonable time has not been, and cannot be, settled by any precise or definite rule, that would be applicable to all kinds and classes of cases. The proper solution of the question depends, to a great extent, upon the facts and circumstances of each particular case. What would be laches in one case might not constitute laches in another, where the facts are different. Mere lapse of time is not always the true criterion to follow, although it often constitutes an important factor. State statutes of limitations are often adopted by analogy. But in some cases courts have held a party guilty of laches for failure to bring his suit within a reasonable time, although the statute of limitations has not expired. Others have declined to dismiss the suit on the ground of laches, even where not brought within the time required by analogy of the statutes of limitation at law. The court, in determining the question, must necessarily be governed by the exercise of its sound legal discretion, with special reference to the facts.

In The Key City, 14 Wall. 653, 659, Mr. Justice Miller, in delivering the opinion of the court, said:

"The authorities on the subject of lapse of time as a defense to suits for the enforcement of maritime liens are carefully and industriously collected in the briefs of counsel on both sides, to which reference is hereby made, without specifying them more particularly. We think that the following propositions, as applicable to the case before us, may be fairly stated as the result of these authorities: (1) That, while the courts of admiralty are not governed in such cases by any statute of limitation, they adopt the principle that laches or delay in the judicial enforcement of maritime liens will, under proper circumstances, constitute a valid defense. (2) That no arbitrary or fixed period of time has been, or will be, established as an inflexible rule, but that the delay which will defeat such a suit must, in every case, depend upon

Digitized by Google

the peculiar equitable circumstances of that case. (3) That where the lien is to be enforced to the detriment of a purchaser for value, without notice of the lien, the defense will be held valid under a shorter time, and a more rigid scrutiny of the circumstances of the delay, than when the claimant is the owner at the time the lien accrued."

In Southard v. Brady, 36 Fed. 560, the court said:

"It is true that there is no statute of limitations in admiralty; but courts of admiralty, like those of equity, will not lend their aid to enforce stale demands. Exceptional circumstances will sometimes lead a court of admiralty to pronounce a claim stale after a lapse of time less than the local statutory period of limitations. Where there is nothing exceptional in the case, the court will govern itself by the analogy of the common-law limitations." Bailey v. Sundberg, 1 C. C. A. 387, 49 Fed. 583, 586.

The Code of Civil Procedure of California limits the time for the commencement of actions as follows:

"Sec. 337. Within four years: An action upon any contract, obligation, or liability, founded upon an instrument in writing, executed in this state."

This proceeding was instituted on the last day of that period of time. There are no facts or circumstances which indicate that by reason of the delay appellant has been prejudiced in any of its legal rights, or prevented in any manner from making any defense that it could have made if there had been no such delay. No witnesses were absent by whom the facts could be established. In brief, there were no difficulties encountered in the path of having a fair trial. There are no special or exceptional facts or circumstances, which so often appeal to the conscience of the courts in such cases, that would, in equity, justify us in holding these libelants guilty of such laches as to deprive them of their right to maintain their libels because of their delay in instituting the proceedings herein.

4. The special contracts provide that:

"It is understood that in the settlement of any claim for loss of, or damage to, any of the above-mentioned goods, said claim shall be restricted to the cash value of such goods at the port of shipment at the date of shipment."

Appellant objects to the methods pursued by the libelants in making the proofs on this point,—both as to the cash value, and of the depreciation of value on account of the damages. The objections are purely technical. There is no showing or pretense that the result reached is erroneous. The damaged goods were sold at public auction, and it is claimed that such a sale does not represent the true market value of the damaged goods. Why not? No showing is made by appellant that any greater value could have been obtained at private sale, or that the public auction was not fairly conducted. What was the use of going through the formula and expense of having the goods appraised? The same objections could perhaps have been urged with as much, or greater, force against an appraisement, as against a public auction after due and timely notice.

In The Columbus, 1 Abb. Adm. 37, Fed. Cas. No. 3,041, Betts, J., said:

"Sale by auction is, in the great marts of commerce, so commonly resorted to by merchants to ascertain the value of deteriorated merchandise, that it

Digitized by Google

may almost amount to a usage of trade. It furnishes, cheaply and promptly, all the accuracy which can be expected in any known measure of damages; and it is peculiarly fitting, in cases of this character, that the court should sanction and sustain it as the method best adapted to protect the interests of all parties concerned."

In The Columbus, 1 Abb. Adm. 97, Fed. Cas. No. 3,042, the same judge said:

"To all reasonable intents, this method of fixing the amount of injury or loss is just as obligatory on him and the vessel as a submission to arbitration, or an adjustment by mutual agreement between the parties. It does not appear that any witness, knowing the condition of the goods, considered the sale prices at all below their marketable value. The sale at auction, under such circumstances, was properly admissible as evidence of the value of the goods when landed."

The objections made upon these points were properly overruled.

5. It is claimed by appellant that the court erred in allowing the witness Haas, when testifying as to the cost of the goods, to refresh his memory from a memorandum marked "Merchandise on Steamer Queen," which the witness said was the bill, or a copy of it, which was handed to the agents of the steamer, of the goods shipped on the Queen. The facts in relation to this memorandum, as shown by the testimony, are as follows:

"By Mr. Andros: Q. Do you know what goods were shipped on board of her? A. I know by the bills. Q. Please to state— Refresh your memory from that paper, and state what they were. Mr. Towle: I object to any testimony from that paper. Mr. Andros: Q. In whose handwriting is that? A. This is in the handwriting of a clerk of ours, who was with us then, and who is with us now, in Los Angeles. The Court: Q. Do you know anything about that paper yourself? A. Nothing more than I told the young man to make it out at the time. He made it under my supervision. Mr. Andros: Q. I will ask you to see, as I read this, whether it corresponds with what is on the back of this bill of lading. * * * Mr. Towle: We object to that as irrelevant, immaterial, and incompetent, whether it agrees with the memorandum or not. Mr. Andros: I propose to prove the cost price of these goods by Mr. Haas, and I want to simply identify these goods by that memorandum, so that he may testify as to the cost. Mr. Towle: So far as it has a bearing upon the question of price, if the witness proposes to testify from that memorandum as to prices, we shall object to that. We object to these questions. If the witness is to testify, he can as well testify from the items on the bill of lading as from the memorandum which agrees with those items. The Court: His memorandum probably has the prices attached. Mr. Andros: Yes, sir. Q. '50 cases of canned vegetables.' What was the price of this, Mr. Haas? Mr. Towle: Are you testifying from your memorandum, or from your own knowledge? A. I am testifying from the memorandum. Mr. Andros: Q. Did you at the time know the cost of these goods? A. Yes, sir. Q. Did you buy them? A. Yes, sir. Q. Bought them yourself here? A. Either bought them myself, or they were bought under my supervision. Q. So at that time you did know what they cost? A. Yes, sir. Q. Did you subsequently instruct that memorandum of that cost to be made? A. Yes, sir. Q. At the time that you made that memorandum yourself, or had it made under your supervision, were the figures therein mentioned the true cost of those goods? A. Yes, sir. Mr. Towle: We ask that that answer be stricken out. * * * We submit that the only memorandum that can be used is one made by himself at the time. * * * The Court: Or under his direction. The Witness: It was our bookkeeper. Mr. Towle: But he directs somebody to make up a memorandum and that paper, and presents them to him. That does not authorize him to testify from it. The Court: He goes further than that. He said he knew it to be correct. * * * The Court: I understood you to say that you knew that the charges there were correct at the time? A. Yes, sir."

Digitized by Google

We have made this quotation because it shows, as clearly as any words we might express, that the objections made by appellant are absolutely untenable. The law is well settled that a witness may be permitted to refresh his memory by the use of any written memorandum, although it is not made by himself, if he saw it while the facts therein stated were fresh in his recollection, and knew that the memorandum, as then made, was correct. 1 Greenl. Ev. (15th Ed.) §§ 436, 437; Com. v. Ford, 130 Mass. 64, 66, and authorities there cited; Huff v. Bennett, 6 N. Y. 337, 339; Jones, Ev. § 880, and authorities there cited; Milling Co. v. Walsh, 108 Mo. 277, 284, 18 S. W. 904.

6. Appellant argues, with reference to the libel of the surviving partners of the firm of Hellman, Haas & Co., that if the loss sustained by them was paid by the Magdeburg General Insurance Company prior to the dissolution by the death of Jacob Haas, one of its members, the surviving partners have no authority to sue, because their authority was limited to a settlement of the partnership affairs as provided by sections 2458–2462 of the Civil Code of California. The contention is that under such conditions, the insurer, having paid the loss, and thereby become subrogated to the partnership rights, during the lifetime of Jacob Haas, had the right to sue in the partnership name, so long as the partnership existed, but that it could not sue, as it did in this case, in the name of the surviving partners. This contention cannot be sustained upon reason or authority.

In Liverpool & G. W. Steam Co. v. Phenix Ins. Co., 129 U. S. 397, 462, 9 Sup. Ct. 469, where the libel was filed by the insurance company, the court said:

"The question of the subrogation of the libelant to the rights of the shippers against the carrier presents no serious difficulty. From the very nature of the contract of insurance as a contract of indemnity, the insurer, upon paying to the assured the amount of a loss, total or partial, of the goods insured, becomes, without any formal assignment, or any express stipulation to that effect in the policy, subrogated, in a corresponding amount, to the assured's right of action against the carrier or other person responsible for the loss, and, in a court of admiralty, may assert in his own name that right of a shipper. The Potomac, 105 U. S. 630, 634; Phœnix Ins. Co. v. Erie & W. Transp. Co., 117 U. S. 312, 321, 6 Sup. Ct. 750, 1176."

In Hall v. Railway Co., 13 Wall. 367, 370, the court said:

"In respect to the ownership of the goods, and the risk incident thereto, the owner and the insurer are considered but one person, having together the beneficial right to the indemnity due from the carrier for a breach of his contract, or for nonperformance of his legal duty. Standing thus, as the insurer does, practically in the position of a surety, stipulating that the goods shall not be lost or injured in consequence of the peril insured against, whenever he has indemnified the owner for the loss he is entitled to all the means of indemnity which the satisfied owner held against the party primarily liable. His right rests upon familiar principles of equity. It is the doctrine of subrogation, dependent not at all upon privity of contract, but worked out through the right of the creditor or owner. Hence it has often been ruled that an insurer who has paid a loss may use the name of the assured in an action to obtain redress from the carrier whose failure of duty caused the loss."

See, also, U. S. v. American Tobacco Co., 166 U. S. 468, 474, 17 Sup. Ct. 619.

Digitized by Google

In the face of these authorities, it is apparent that the question as to who shall bring the suit is one to be determined between the shippers and the insurance company. It is no concern of the appellant whether the libel is brought in the name of the shippers, or in the name of the insurance company. In either event the right of the claimant in its defense would be identical. If the insurance company became subrogated to the right of the partnership during the lifetime of all the partners, the death of one subsequent to the loss, and its payment by the insurance company, would not prevent it from recovering from the carrier for the damage sustained to the goods. The insurance company had the right at its election to use the name of the surviving partners of the firm in bringing this suit, or to have instituted the suit in its own name. If it were brought for the benefit of the insurance company, it stands, in law, the same as if it were brought in its own name, and its right to maintain the suit cannot be questioned by the claimant.

There are other minor points discussed by counsel, which we have examined, but do not think necessary to discuss. It is enough to say that they are without merit.

7. It is contended by appellant that no negligence on the part of the ship was proven by appellees; that the presumption of negligence from the goods being wet was overthrown by proof on the part of appellant that the steamer was seaworthy when she sailed, and that there was no negligence of the master or crew on the voyage; that these facts, which are not disputed, cast upon the libelants the burden of proving some specific negligence, which they have failed to do; that the libels, while they allege the execution of the contract, are based, not upon a breach of contract per se, but upon negligence, and negligence only, as the occasion and foundation of the alleged damages. Upon these points the respective proctors have exhibited great and commendable industry in the citation of authorities which it is claimed support their views, and have furnished the court with convincing evidence of their skill, ability, and learning in the arguments which they have elaborately made in their briefs. In the light of their respective contentions, it becomes important to first determine the true nature and character of the libels,—whether they are to be construed to be actions upon torts, as claimed by appellant, or actions upon contracts, as claimed by appellees. The question is important. But, upon a careful examination of all the cases, we are of opinion that it is not difficult of solution. There is no apparent conflict in the authorities cited. The differences which at first blush might seem to exist are, upon close examination, found to be based upon different facts as to the allegations contained in the libels. Some refer to common-law actions, others to proceedings in admiralty; some are cases of collision, and others upon contracts for affreightment. Discretion, judgment, and patient consideration must be brought to bear in order to determine which are applicable, and which are not, to the pleadings and facts in the present case. We have, in the statement of facts, copied the averments in the libels. They need not be repeated. It is essential to bear in mind that proceedings in admiralty are not the same as in the courts of the common law. As was said by Mr. Justice Story in The Adeline, 9 Cranch, 244, 284, "no proceedings can be more unlike than those in the courts of

Digitized by Google

common law and in the admiralty." In actions at common law the pleadings are to be construed strongly against the pleader, and often strictly, without regard to the real substance of the action; but in admiralty the rule is different. All courts of admiralty agree in regarding substance as of more importance than form, in the proceedings which come before it; and therefore any process in admiralty is, in general, if not always, sufficient, which distinctly brings the substance of a case, and the actual parties, before a proper court in such way as to permit the questions of the case to be investigated, its merits ascertained, and justice done. 2 Pars. Adm. 369.

The criticism of appellant is based upon the language in the libel, "that, in consequence of the injury and damage to said merchandise by sea water, * * * the libelant has sustained damages." And he argues that while the libels, by way of inducement, show a failure to perform the special contracts, they do not claim any damage as resulting therefrom, and that, by the selection of the libelants, the damages alleged are limited to the alleged negligence of the servants of the Pacific Coast Steamship Company in permitting the sea water to flow in upon the goods, and that such averments show that the action is founded upon a tort, and not upon a contract, and that, if there was no negligence, the libelant cannot recover any damages. We are unable to agree with the views thus expressed. On the other hand, we are of opinion that the proceeding is founded upon the contract of affreightment, and that the claim for damages is based upon the failure of the steamship company to deliver the merchandise in good order and condition, and that the averments in the pleadings as to the negligence are merely illustrative of the manner in which the goods were damaged. It cannot, it seems to us, be legally said that the mere mention of the word "negligence," as used in the pleadings, changes the character of the proceeding from one on a contract to one in tort. If there is an express contract, and the act complained of is a breach of it, the action is clearly founded on a contract. The libelants had the privilege of selecting the form of the proceeding,—whether in tort or upon the contract; and, having elected to rely upon the contract, they are entitled to all the rights and privileges pertaining thereto.

The authorities cited by appellant in the collision cases and cases at common law are not, in our opinion, applicable to this case. The other cases do not sustain his position.

In Legge v. Tucker, 1 Hurl. & N. 500, which is referred to with approbation by the court in Atlantic & P. R. Co. v. Laird, 164 U. S. 393, 398, 17 Sup. Ct. 120, the action was, in form, an action on the case, for the negligence of the livery stable keeper in the care and custody of a horse; and it was held that the foundation of the action was a contract, and that, in whatever way the declaration was formed, it was an action of assumpsit. Pollock, C. B., said:

"Where the foundation of the action is a contract, in whatever way the declaration is framed, it is an action of assumpsit."

Watson, B., said:

"The action is clearly founded on contract. Formerly, in actions against carriers, the custom of the realm was set out in the declaration. Here a contract is stated by way of inducement, and the true question is whether, if that

Digitized by Google

were struck out, any ground of action would remain. Williamson v. Allison, 2 East, 452. There is no duty independently of the contract, and therefore it is an action of assumpsit."

In Baylis v. Lintott, 8 L. R. C. P. 345, the action was against a carriage proprietor for not securely carrying certain luggage belonging to a person who had hired his carriage. The declaration alleged that in consideration that the plaintiff, with her luggage, would become a passenger in such carriage, the defendant promised to carry the plaintiff and her luggage safely, but did not safely carry the plaintiff's luggage, but so carelessly and negligently conducted himself that part of said luggage was lost. The court held that the cause of action set forth in the declaration was "founded on a contract."

In Fleming v. Railway Co., 4 Q. B. Div. 81, 83, the material parts of the statement of claim were (1) that the plaintiffs delivered to the defendants, as common carriers of goods for hire, a parcel of goods of the plaintiffs, to be carried by the defendants from Sheffield to Dundee, for reward to the defendants; (2) that the defendants, as such common carriers as aforesaid, accepted the said parcel of goods, to be by them taken care of, and safely and securely carried and delivered to the plaintiffs at Dundee; (3) that the defendants did not take care of, and safely and securely carry and deliver to the plaintiffs, the said parcel of goods, but, not regarding their duty in that behalf, so carelessly and negligently conducted themselves with respect thereto that the said parcel of goods was and is wholly lost. The court said:

"The question is whether the plaintiffs are entitled to costs in an action in which they have recovered a sum not exceeding £20, and in which they charge the defendants as common carriers. According to Bryant v. Herbert, 3 C. P. Div. 389, we have to determine whether the action 'is founded on contract' or 'on a tort'; and, whether we are to decide this question by looking at the form of the pleadings or at the facts, it is clear that this action is 'founded on contract.' * * * These allegations seem, in effect, to amount to a charge that, in consideration of the payment of hire, the defendants promised to carry safely the plaintiffs' goods; and this would clearly have been, under the old forms of pleading, a declaration in contract."

The law upon this subject is well expressed in Schouler, Bailm. p. 557, as follows:

"Concerning the Form of Action. This, at common law, may be ex delicto or ex contractu. So long as the common-carriage occupation was considered simply as a public duty, its breach was deemed tortious, and the carrier suable in an action on the case founded upon the custom of the realm, but, when contract began to assuage the rigor of public policy, it became established that the carrier should be held liable in assumpsit on his undertaking; and hence the modern usage to lay hold of the advantages of the action ex contractu, while preserving those likewise of that more ancient remedy against carriers, ex delicto, which the practice of earlier centuries commended. Where the transaction and the character of the loss require the plaintiff to show a contract, express or implied, with the carrier, to support his action, contract is the true remedy; otherwise the preferable form of action is tort."

In a proceeding of this character, and under the facts established in this case, the following principles of law are well settled:

(1) That common carriers by water, like common carriers by land, are in the nature of insurers, and are liable for every loss or

Digitized by Google

damage, however occasioned, unless it happens from the act of God or the public enemy, or by the act of the shipper, or from some other cause or accident expressly excepted in the bill of lading. Niagara v. Cordes, 21 How. 7, 22, 26. In Hall v. Railway Co., 13 Wall. 367, 372, the court said:

"When a loss occurs, unless caused by the act of God or of a public enemy, he is always in fault. The law raises against him a conclusive presumption of misconduct or breach of duty in relation to every loss not caused by excepted perils. Even if innocent in fact, he has consented by his contract to be dealt with as if he were not so."

(2) That where merchandise is shipped, and the usual bill of lading given, promising to deliver the same in good order, the dangers of the sea excepted, and they are found to be damaged, the onus probandi is upon the owner of the vessel to show that the injury was occasioned by one of the excepted causes. Rich v. Lambert, 12 How. 347, 357; Nelson v. Woodruff, 1 Black, 156, 169; The Majestic, 166 U. S. 375, 386, 17 Sup. Ct. 597, and authorities there cited; The Lydian Monarch, 23 Fed. 298; The Mascotte, 2 C. C. A. 399, 51 Fed. 605; The Compta, 4 Sawy. 375, 377, Fed. Cas. No. 3,069; Hunt v. The Cleveland, 6 McLean, 76, Fed. Cas. No. 6,885; Ang. Carr. § 202; Chit. Carr. *142; Lawson, Carr. §§ 245, 247.

(3) That, in every contract for the carriage of goods by sea, there is a warranty on the part of the shipowner that the ship is seaworthy at the time of beginning her voyage, and his undertaking to safely carry the goods cannot be discharged because the want of fitness in the steamer is the result of latent defects. The Caledonia, 43 Fed. 681, 685; Work v. Leathers, 97 U. S. 379; The Edwin I. Morrison, 153 U. S. 199, 210, 14 Sup. Ct. 823; The Caledonia, 157 U. S. 124, 130, 15 Sup. Ct. 537.

(4) That, although it may be presumed that a vessel is seaworthy when she sails, if soon thereafter a leak is found, without the ship having encountered a peril sufficient to account for it, the presumption is that she was not seaworthy when she sailed. Higgie v. American Lloyds, 14 Fed. 143, 147; The Gulnare, 42 Fed. 861; Work v. Leathers, 97 U. S. 379; The Planter, 2 Woods, 490, Fed. Cas. No. 11,207a; Cort v. Insurance Co., 2 Wash. C. C. 375, Fed. Cas. No. 3,257; Walsh v. Insurance Co., 32 N. Y. 427, 436.

Appellant contends that the stranding of the Queen is the causa proxima of the damage, and was a sea peril, within the meaning of the special contracts relieving the Queen from all liability for damage resulting from "dangers of the sea," and that upon the established facts "that a thoroughly seaworthy vessel, without negligence on the part of her crew, springs a leak 12 hours after she sails, she not having, so far as is shown, encountered anything unusual upon the voyage, what is the presumption relating to the leak? Was it the result of accident? Was it the result of a sea peril? That it must be presumed to have resulted from the one or the other, seems evident." We are of opinion that the stranding of the ship at Port Harford was only incidental in causing the damage. The steamer was run to the beach, not because of high winds or boisterous weather, or any danger of the sea, but from

Digitized by Google

the fact that a leak had been discovered which could not be controlled. The fact, if it be the fact, that the merchandise was not wet with sea water until the steamer stranded at the beach, is wholly immaterial. It was the leak in the steamer that was the cause of the damage, and the real and only question necessary to be discussed is whether that leak was occasioned by a peril of the sea, or came within any of the exceptions mentioned in the shipping receipt, or, if the cause of the leak is not shown, then, upon the presumptions which the law raises as to the burden of proof; and we shall confine our discussion to those points.

The argument on behalf of appellant is based upon the erroneous theory that its obligation to libelants was discharged when it introduced evidence at the trial that the Queen was an absolutely seaworthy steamer when she sailed, and was properly manned, officered, and equipped on her voyage, and that appellant was not guilty of any negligence in the use of the steamer or the handling of the goods. In order to overcome the prima facie case made by the libelants, so as to relieve itself from all responsibility, the law imposed upon appellant the burden of establishing that the damage to the goods was occasioned by some of the exceptions mentioned in the shipping receipt; and in this respect it has failed to meet the requirements of the law. What are the facts? The libelants simply introduced their shipping receipts as evidence of the apparent good order and condition of the merchandise when delivered to the steamship company, the damaged condition of the goods when returned to San Francisco, and that the goods were then of less value than when shipped. Appellant then introduced evidence which tended to support the averments in its answer as to the absolute seaworthiness of the Queen when she sailed; the competency of her master, officers, and crew; the fact of a leak being discovered about 11 hours after the Queen sailed from San Francisco; that every attempt was made, consistent with prudent navigation and good seamanship, to discover the aperture or place through which the water entered the steamer, and the circumstances of her being compelled to put into Port Harford, and her being there beached, substantially as alleged in claimant's answer. The evidence shows that the leak was on the starboard side of the vessel, and was first discovered by the water tender, who noticed a small amount of water on the floor of the engine room, in a place that should have been dry. It was dropping from a point in the iron bulkhead on the starboard side of the engine room, a few inches above the deck of the alleyway in the between-decks of the vessel, coming from a water-tight compartment on the starboard side. This condition of affairs was immediately reported to the captain, and prompt measures were at once taken to ascertain the precise locality and cause of the leak, and to arrest its progress. But all of the efforts of the officers and crew in this direction proved ineffectual; and the captain then, in the exercise of a wise discretion, as alleged in the answer, and shown by his testimony, ran the steamer upon the beach at Port Harford. The evidence is as dumb as an oyster as to the cause of the leak. There is no evi-

Digitized by Google

dence that the Queen, after she sailed from the port of San Francisco, met with any accident or injury, or tempestuous winds or boisterous weather, which would have caused the leak. The captain, it is true, stated that they had some boisterous weather, but, upon his cross-examination, admitted that it was only the ordinary weather usually met with, and to be expected, at that season of the year. There was no evidence tending to show that the leak could be rationally attributed to any accident or injury produced by the state of the weather then prevailing. From this brief, but substantial, review of the testimony, it is apparent that the real and efficient cause of the leak is not disclosed by the evidence. It does not affirmatively appear that the cause of the leak was not within the knowledge of the claimant. It is true that in appellant's brief it is said, "The cause of the aperture has not been explained, nor does it appear that it was within the power of any one to explain it." Again appellant says, "Claimant showed the fact of the leak, and that it did not know—could not know—what cause it was that had produced it." We have been unable to find any testimony in the record that supports these statements. But, on the contrary, the record shows that pending the examination of Capt. Alexander, of the Queen, as a witness, the court, of its own motion, put to him several questions,—among others, the following:

"Q. I will ask you another question, to which there may be an objection made by counsel, and you need not answer it until I determine the objection. After the Queen of the Pacific was raised at Port Harford, did you discover the cause of the leak? Mr. Towle: We object to that. The Court: What is the ground of your objection? Mr. Towle: The objection is that it is not a part of our case, and is not the theory on which we are trying it,—as to what may have been discovered after the vessel had been on the rocks. (After argument.) The Court: I appreciate the fact that you are trying the case very carefully, and on a very narrow margin. I think, for the time being, I will sustain Mr. Towle's objection to the question put by the court. Mr. Towle: I would like your honor to withdraw the question. Mr. Andros: I would prefer that the objection be sustained. The Court: I do not want anything that the court does to change the theory of the case. I will withdraw the question for the present, and will see what may come hereafter. I do not know what I may do hereafter."

This action upon the part of the claimant is significant,—especially in view of the fact that it appears from the evidence that after the Queen was beached at Port Harford, and while she was partially submerged, a diver was sent down to examine her bottom and ascertain what was wrong with the steamer. He stopped the leak, all the bulkhead doors were secured from the inside, a cofferdam was built around the forward hatch, the water was pumped out, and the steamer floated. Forty-eight hours thereafter she returned to San Francisco, without any leak occurring on the return voyage; and upon a thorough examination at the Union Iron Works, on the dry dock, she was found to be in a perfectly seaworthy condition. Considering these facts, not alone upon probabilities and conjecture, but in the light of reason, and of the objections that were made to the question asked by the court, is it not fair to presume that the claimant had knowledge of the real cause of the leak, and that its failure to show what the cause was

Digitized by Google

is a strong circumstance tending to show that, if the truth had been disclosed, it would not have relieved the claimant upon any of the grounds of exemption from liability in the shipping receipts or bills of lading?

In Railway Co. v. Ellis, 4 C. C. A. 454, 54 Fed. 481, 483, the court said:

"Now, it is a well-settled rule of evidence that when the circumstances in proof tend to fix a liability on a party who has it in his power to offer evidence of all the facts as they existed, and rebut the inferences which the circumstances in proof tend to establish, and he fails to offer such proof, the natural conclusion is that the proof, if produced, instead of rebutting, would support, the inferences against him; and the jury is justified in acting upon that conclusion. 'It is certainly a maxim,' said Lord Mansfield, 'that all evidence is to be weighed according to the proof which it was in the power of one side to have produced, and in the power of the other side to have contradicted.' Blatch v. Archer, Cowp. 63, 65. It is said by Mr. Starkie, in his work on Evidence (volume 1, p. 54): 'The conduct of the party in omitting to produce that evidence in elucidation of the subject-matter in dispute which is within his power, and which rests peculiarly within his own knowledge, frequently affords occasion for presumptions against him, since it raises strong suspicion that such evidence, if adduced, would operate to his prejudice.' "

We are of opinion that the court, notwithstanding the objection of Mr. Towle, would have been justified in requiring the witness to answer the question, even if it were not in precise harmony with the theory upon which the parties were proceeding in the case. Why not? If it were within the power of the court to ascertain the truth, why should it be withheld or suppressed because the proctors desired to burden the court with the legal presumptions arising from the failure to show a fact which, if shown, would make the solution of the question as to how the case should be decided easy and plain? The court ought not to have been compelled to decide the case upon the presumptions of law until it was affirmatively shown that the claimant could not, after diligent search, introduce any evidence as to what caused the leak. Why should the court be required to indulge in presumptions, of its own motion, as to the cause of the leak, and then be criticised for so doing, when the appellant carefully, cautiously, and designedly refrained from shedding any light thereon, or offering any evidence in regard thereto; assigning as the reason therefor, that such facts would be inconsistent with the theory upon which the case was being tried? If appellant had introduced any testimony that it had tried to ascertain the cause of the leak, and had been unable so to do, that would, perhaps, have introduced another theory; but if Capt. Alexander had been allowed or compelled to answer the question asked by the court, and the examination continued on this new theory, the presumptions are that the truth as to the cause of the leak would have been discovered, and the case would have then been decided upon the facts, instead of presumptions.

In The Compta, 4 Sawy. 375, Fed. Cas. No. 3,069, which is cited and relied upon by both parties, and which, in several respects, bears a close analogy to the case in hand, the court said:

"This action is brought to recover damages for injuries to goods shipped on board the above vessel, and consigned to libelants under various bills of lading, which are appended to the bill. At the hearing, the shipment of the

Digitized by Google

goods, and their delivery in a damaged condition, were admitted. It was also admitted that the damage was by sea water. The burden of proof was thus cast upon the carrier to show that the damage was occasioned by one of those causes from the effects of which he is exempted, from the terms of the bill of lading, or by the general rules of law."

After stating that the defense set up in the answer was perils of the sea, and that the contention of the defendant was that the ship encountered such violent gales and heavy seas "as to strain and damage her, thereby causing her decks to leak and admit water to the cargo," and the facts in relation thereto, the court further said:

"It may, I think, reasonably be concluded that the weather experienced by the vessel was such as might, possibly, have produced, on a stanch and seaworthy ship, the effects attributed to it by the claimants, but that it was not of such unusual and extreme severity as to justify the assumption, without further evidence, that it caused the leaks which occasioned the damage. The carrier, to make good his defense, is bound to show that the damage arose from a sea peril. It is not enough for him to show that it might have arisen from that cause. He must prove that it did. This proof can be afforded either by showing a sea peril of such a character that injury to the vessel, however stanch and seaworthy, would be its natural and necessary consequence, or by the direct testimony of those who observed its effect upon the ship, or by proving her condition on her arrival; or he may exclude every other hypothesis of causation, by satisfactory proof that she was tight, stanch, and seaworthy at the commencement of the voyage."

The broad statement is clearly made that it is the duty of the owner, in order to relieve himself, "to show that the damage arose from a sea peril." It necessarily follows that, if such facts are known to him, he must prove them. "It is not enough for him to show that it might have arisen from that cause. He must prove that it did." If the facts are unknown to him then the other methods of proof suggested by Judge Hoffman may be resorted to, —their sufficiency, of course, to be determined by the court. Common sense and sound reason appeal strongly to the conscience of the court, against the adoption of any rule that would allow the claimant to withhold the facts within his knowledge, and rely solely on the theory of presumptions.

In The Edwin I. Morrison, 153 U. S. 199, 210, 14 Sup. Ct. 823, the vessel was bound from Weymouth, Mass., to Savannah, Ga., and her cargo was damaged by reason of the loss of the cap covering the bilge-pump hole; and it was alleged that this pump had not been properly screwed down, but negligently and improperly fastened, and left insecure, by those in charge of the steamer. The defense was that it was displaced by a peril of the sea. The district court entered a decree in favor of the libelant, which was reversed by the circuit court. The supreme court reversed the decision of the circuit court, and affirmed that of the district court. It appeared in that case that almost immediately after the commencement of the voyage the steamer encountered a storm of unprecedented violence, from the effects of which she took in 18 inches of water, which came in contact with the cargo, and soaked it to some extent. The court said:

"Assuming, as we must, that the damages awarded by the district court resulted from the loss of the cap and plate covering the bilge-pump hole,

Digitized by Google

the question to be determined is whether that loss was occasioned by a peril of the sea, or by the condition of that covering as it was when the vessel entered upon her voyage. If, through some defect or weakness, the plate and cap, and the screws which secured it, came off, or if the cap and plate were so made or so fastened as to be liable to be knocked off by any ordinary blows from objects washed by the sea across the decks, then the vessel was not seaworthy in that respect, and the loss could not be held to come within the exception of perils of the sea, although the vessel encountered adverse winds and heavy weather. * * * The obligation rested on the owners to make such inspection as would ascertain that the cap and plates were secure. Their warranty that the vessel was seaworthy in fact did not depend on their knowledge or ignorance, their care or diligence."

Upon all the evidence contained in the record, we are of opinion that the court did not err in its conclusion that the burden of proof rested upon the claimant to show that the leak, which was the direct cause which led to the damage of the goods by sea water, occurred by the danger of the sea, and that in the absence of any such proof the presumption of the law is that the damage was occasioned either from the unseaworthiness of the steamer, or from the carelessness or negligence of the officers and crew on board. In either event the claimant and the steamer would be liable. The decree of the district court is affirmed, with costs.

(95 Fed. 497.)

TOLEDO, ST. L. & K. C. R. CO. et al. v. CONTINENTAL TRUST CO. et al.

HAMLIN et al. v. SAME. ROSE v. SAME.

(Circuit Court of Appeals, Sixth Circuit. July 5, 1899.)

Nos. 640, 641, 673.

1. JURISDICTION OF FEDERAL COURTS—FORECLOSURE OF RAILROAD MORTGAGE—POSSESSION OF RECEIVER.

   Where a federal court, by its receiver, has possession of all the property of a railroad company for the purpose of administering it as the property of an insolvent corporation in a suit brought by general creditors, such possession draws to that court, as auxiliary, all suits and proceedings with respect to the property, and it has jurisdiction of proceedings to foreclose a mortgage without regard to the citizenship of the parties, whether such proceedings are by cross bill or intervening petition in the pending suit, or by an original bill.[1]

2. SAME—BILL ANCILLARY TO CREDITORS' SUIT—PROCEDURE.

   The fact that a federal court acquires jurisdiction of a suit to foreclose a railroad mortgage, by reason of its being ancillary to a pending creditors' suit, in which the court has, through its receiver, taken possession of the mortgaged property, does not make the two suits one, though, for convenience in hearing, they are consolidated, nor does it affect the rules governing parties, issues, or pleading in the foreclosure suit, and, where the mortgage constitutes the first lien on the property, it is not necessary that a decree of foreclosure should await the establishing and adjustment of all claims filed in the creditors' suit.

---

[1] As to mortgage foreclosures in federal courts generally, see note to Seattle, L. S. & W. Ry. Co. v. Union Trust Co., 24 C. C. A. 523.

Jurisdiction, as affected by possession of the subject-matter of controversy, see note to Adams v. Trust Co., 15 C. C. A. 6.

See, also, note at end of case.

Digitized by Google

3. EQUITY—CONSOLIDATION OF SUITS.

Rev. St. § 921, authorizing consolidation of suits, applies as well to suits in equity as at law, and the consolidation of two suits in equity is within the sound discretion of the court, but suits consolidated remain separate as to parties, pleadings, and decrees, unless otherwise directed.

4. ESTOPPEL—CREDITORS OF DE FACTO CORPORATION—DENIAL OF CORPORATE EXISTENCE.

Creditors of a de facto corporation, who dealt with it as a corporation, are estopped to deny its corporate existence for the purpose of defeating a mortgage which it executed in such capacity.

5. RAILROAD COMPANIES—CONSOLIDATION—DE FACTO CORPORATIONS.

Where the statutes of a state authorize the consolidation of railroad companies of the state with those of other states under certain conditions or circumstances, a consolidation of such companies creates a de facto corporation, even though the constituent companies did not possess the qualifications required by the statute to render the consolidated company a corporation de jure, and its corporate existence can only be questioned on that ground by the state.

6. SAME—CONSOLIDATION UNDER ILLINOIS STATUTE.

Under the statute of Illinois (3 Starr & C. Ann. St. p. 3241), providing that "whenever any railroad which is situated partly in this state and partly in one or more other states, and heretofore owned by a corporation formed by consolidation of railroad corporations of this and other states," has been sold under a decree of a court, and "purchased as an entirety," and is held by corporations of the different states in which it is situated, the Illinois corporation owning the portion within that state may consolidate with the others, it is no objection to the legality of such consolidation that the original consolidated company which operated the road before its sale, as to a short section of it, held only the equitable title, the legal title being in a local company, practically all of whose stock was owned by the consolidated company, nor can it be held that the road was not "purchased as an entirety," within the meaning of the statute, because it was sold in two divisions, being covered by separate mortgages, where both divisions were sold on the same day to the same purchaser, and were conveyed by one deed.

7. SAME—CONSOLIDATION UNDER OHIO STATUTE.

Under Rev. St. Ohio, § 3380, which permits the consolidation of an Ohio railroad company with a company of "an adjoining state," where the roads of the two companies will form a continuous line, the legality of a consolidation between an Ohio and an Indiana company is not affected by the fact that an Illinois company is also included as a constituent member of the consolidated company, where the roads owned by the three companies form a continuous line.

8. SAME — VALIDITY OF BONDS — PRICE RECEIVED WHEN ISSUED IN PAYMENT FOR PROPERTY.

In ascertaining the price for which bonds of a railroad company were sold, for the purpose of determining their validity under a statute prohibiting their sale for less than 75 per cent. of their par value, but which fixed no minimum limit on the sale of stock, where the bonds were not sold for cash, but an amount of both bonds and stock were issued to a contractor in consideration of his agreement to purchase a railroad at foreclosure sale, to pay off liens thereon, to reconstruct it, changing it from a narrow-gauge to a standard-gauge road, and to equip it with rolling stock (in effect as the purchase price of a reconstructed and newly-equipped road), it is not necessary that the value of the consideration received by the company should be equally distributed between both bonds and stock, according to the amount of each issued to the contractor, but the stock may properly be computed in the payment at its market value; nor is the value of what was actually done by the contractor the measure of the consideration received by the company for the bonds, but the value of what he undertook by his contract to do.

Digitized by Google

9. SAME—RIGHT OF SUBSEQUENT CREDITORS TO ATTACK VALIDITY OF BONDS.
Where a full settlement has been made between a railroad company and a contractor, to whom the company issued bonds in payment for work, which settlement was acquiesced in by all parties in interest, subsequent creditors of the company cannot attack the validity of the bonds on the ground of fraud on the part of the contractor or a failure to properly perform the contract.

10. SAME—PURCHASE OF BONDS BY DIRECTOR FROM CONTRACTOR—OHIO STATUTE.
Rev. St. Ohio, § 3313, providing that all stock, bonds, or securities of a railroad company purchased of the company by a director thereof, either directly or indirectly, for less than their par value, shall be "null and void," applies only to original sales made by the company, and the acquiring of an interest in bonds by a director through a contractor to whom the company had contracted to deliver them in payment for work, after they had been issued by the company, and deposited with trustees to be delivered to the contractor as the work progressed, either by direct purchase, or by a secret agreement, made after such issuance and deposit, for a share of the profits of the contract, does not invalidate such bonds.

11. SAME—VERBAL OPTION GIVEN BONDHOLDERS OF OLD COMPANY.
Nor are they void under the statute by reason of a verbal option given certain directors by the contractor to purchase bonds from him for less than par, after they were earned under his contract, in consideration of their consent, as bondholders of a prior company, to a certain plan of reorganization, which agreement was wholly collateral to his contract with the company.

12. SAME—WAIVER OF DEFENSE—RIGHTS OF SUBSEQUENT CREDITORS.
Such statute is for the protection of the corporation, and does not make stock or bonds of a company sold to a director for less than par absolutely void, but voidable only, and subsequent creditors cannot attack the validity of bonds on that ground, where it is not questioned by the corporation or its stockholders.

13. SAME—LIEN OF PREFERRED STOCKHOLDERS—LACHES.
A provision in certificates of preferred stock issued by a railroad company, making such stock a lien on not only the net earnings, but on the property of the company, is not illegal, as against common stockholders, in the absence of a statute or charter provision affecting it; and, where such certificates were issued and placed on the market with the knowledge and acquiescence of the then owner of all the common stock, holders of common stock cannot after 10 years, and on final distribution of the property of the company for the first time, raise the objection that such provision was not authorized by any action of the directors.

14. SAME — DE FACTO DISSOLUTION—FORECLOSURE—SALE OF PROPERTY AND FRANCHISES—DISTRIBUTING SURPLUS.
Where the entire property and franchise of a railroad company are sold in foreclosure proceedings, and conveyed to the purchaser, such act puts an end to the capacity of the company to do the only business for which it was created, and may be treated as a de facto dissolution of the corporation, for the purpose of a final administration of its assets; and such action is especially justified where there are preferred stockholders having a prior right in the distribution of any surplus remaining after payment of the debts of the corporation, but who have no voice in its management, and, in such case, a pending creditors' suit against the company may be utilized by the court for the purpose of requiring all creditors, on due notice by publication, to present their claims, and, on their adjustment and payment, for making distribution of any surplus in accordance with the rights of the stockholders as established in the foreclosure suit.

15. APPEAL—DECREE REFUSING LEAVE TO INTERVENE.
No appeal lies from a decree refusing leave to intervene and become a party.

Digitized by Google

Appeals from the Circuit Court of the United States for the Northern District of Ohio.

The appeal in the principal case, styled as above, is an appeal by the railroad company, and various intervening creditors of that company, from a decree foreclosing a first mortgage made by said railroad company to secure an issue of its bonds aggregating $9,000,000, and directing a sale of all of its property and franchises, and dismissing various intervening petitions filed by unsecured creditors of said mortgagor railroad company attacking the validity of its mortgage bonds upon various grounds, and from a decree upon the cross bill of Charles Hamlin and others, giving to holders of preferred stock issued by said railroad company a preference over the common stock in the surplus of the property of said railroad company, after the payment of all of the debts of the company. The appeal of Charles Hamlin and others is from so much of the decree of sale as charged the property of the railroad company with a lien for all debts of the company which might at any time be established to the extent that the holders of such preferred shares might use the same in paying any bid made by them as purchasers at the foreclosure sale of said property. The appeal of Dana A. Rose is from a decree striking an intervening petition filed by him from the files.

The Toledo, St. Louis & Kansas City Railroad Company is a consolidated corporation of Ohio, Indiana, and Illinois. Its road extends from Toledo, in Ohio, to East St. Louis, in Illinois, and is 450 miles in length. This consolidated company was organized June 19, 1886, by a consolidation of three constituent companies, corporations, respectively, of the states of Ohio, Indiana, and Illinois. In May, 1893, Stout and Purdy, citizens of New York, and judgment creditors of the said consolidated company, filed a creditors' bill in the circuit court of the United States for the Western division of the Northern district of Ohio against said railroad company, in behalf of themselves and other creditors. Like bills were filed at the same time in Indiana and Illinois. Under these bills, the same receiver was appointed in each jurisdiction, and the entire line of railway was thereafter operated under the direction of the circuit court for the Northern district of Ohio, that being the court of original and primary jurisdiction. Other creditors were, by publication under order of the court, invited to come in under that bill, and to file their claims before the master, and many of them did so; among them being a committee representing the holders of first mortgage bonds as a class. At the time of the filing of this creditors' bill, there had been no such default in payments of interest upon the mortgage debt as would authorize foreclosure. Such default did subsequently occur, and thereupon the trustees under the first and only mortgage filed a bill in the same circuit court for the foreclosure of that mortgage. These trustees were the Continental Trust Company, a corporation of the state of New York, and John M. Butler, a citizen of the state of Indiana. The defendants under this foreclosure bill were the railroad company, the receiver appointed under the creditors' bill of Stout and Purdy, and certain judgment creditors of the railroad company. This bill was filed by leave of the court, and the receiver under the creditors' bill was made receiver under the foreclosure bill. At the same time an order was made consolidating the creditors' suit with this foreclosure proceeding, and directing that the consolidated cause should take the title of the foreclosure proceeding, and that the receivership under the creditors' bill should be extended to the said foreclosure suit. Answers were filed to this foreclosure suit by the railroad company, and by the judgment creditors made parties defendant thereto. The answer of the railroad company declined to admit that it was a validly consolidated company, though it had acted as such; declined to admit the validity of the mortgage or of the bonds secured thereunder; denied default in interest as well as insolvency; and declined to admit the averments of the bill as to the bona fide character of the owners of the mortgage bonds. Some of the judgment creditors made defendants denied the legality of the consolidation under which the mortgagor company became a corporation; denied the power of the company to make a mortgage or issue bonds; and denied that the present holders of said bonds were bona fide holders for value; and asserted the priority of their judgments over the bonds. In the foreclosure suit certain creditors of

Digitized by Google

the railroad company were permitted to intervene by petition for the purpose of attacking the validity of the bonds of the railroad company. This they did, by averring that all of the bonds had been sold by the company at less than 75 cents on the dollar, in contravention of section 3290, Rev. St. Ohio, and also that they had been purchased by directors at less than par, and were therefore void, under section 3313, Id. Hamlin and others, representing a majority of the preferred stock of the company, were also admitted as defendants to the foreclosure suit, and allowed to answer and file a cross bill. The history of the admission of these preferred stockholders as defendants, over the objection of the complainants in the foreclosure suit, is fully stated in the opinion of this court, reported as Hamlin v. Trust Co., 47 U. S. App. 422, 24 C. C. A. 271, and 78 Fed. 664. The answer of the Hamlins, as representatives of the class of preferred stockholders, denied the validity of the bonds, upon the ground that they had been fraudulently paid out to one S. H. Kneeland, the holder of the entire common stock of the company, upon a contract with him under which he was obligated to convert the original narrow-gauge railroad into a first-class standard-gauge railroad, with full equipment of engines and rolling stock, and pay off all liens prior to the mortgage, in consideration of the bonds and common stock of the consolidated company. It was averred that Kneeland had not performed his contract in respect to the reconstruction and re-equipment of the railroad, and had not paid off some $700,000 of liens which he was bound to discharge, but that through fraud he had procured the issuance to him of the entire issue of bonds, aggregating $9,000,000, and of the entire common stock of $11,250,000, and $1,000,000 in preferred stock, and that the value of things done in the performance of his contract did not exceed $5,000,000, and that he had therefore received the bonds for about one-third of their par value, in violation of the laws of Ohio, Indiana, and Illinois. It was also averred that the bonds had been taken by their present holders subject to all defenses, and with full knowledge and notice of the facts which made them invalid. By Hamlin's cross bill, it was sought to have an account taken with Kneeland, and the amount received for the bonds ascertained, and the holders of such bonds limited to a recovery of the value received by the company. A lien second only to the valid bonds was asserted in behalf of the said preferred shares of stock. The lien claimed in behalf of the preferred stockholders arises under the terms set forth in the certificates issued to holders of such stock, which were in the form following:

"Toledo, St. Louis & Kansas City Railroad Company.

"No. —. Preferred Capital Stock. 10 Shares.

"This is to certify that James M. Quigley or bearer is entitled to ten shares, of one hundred dollars each, of the preferred nonvoting capital stock of the Toledo, St. Louis & Kansas City Railroad Company. This constitutes a lien upon the property and net earnings of the company next after the company's existing first mortgage. It does not entitle the holder to vote thereon. After the first day of January, 1888, it is entitled to and carries interest at the rate of 4 per cent. per annum, payable semiannually, represented by interest coupons attached to this certificate. Such interest is only payable out of the net earnings of the company after the payment of interest upon its existing first mortgage bonds, and the cost of maintenance and operation. A statement showing the business of the company for the half of its fiscal year next preceding shall be exhibited at the office of the company in New York, to the holder of this certificate, at the maturity of each interest coupon, and the net earnings applicable to such interest shall be reckoned for such period. Such interest is not to accumulate as a charge, and the coupons representing unearned interest must be surrendered and canceled on the payment, in whole or in part, of a subsequently maturing coupon. At any time after the first day of January, 1888, this certificate may be converted into the common capital stock of the company. If not converted then, to become a preferred 4 per cent. noncumulative stock. The company will create no mortgage of its main line other than its first mortgage, nor of any part thereof, except expressly subject to the prior lien of this certificate, without the consent of the holders of at least two-thirds of this stock present at a meeting, of which reasonable personal notice must be given to each registered stockholder, and by publication for at least three successive

Digitized by Google

weeks in two leading daily papers, newspapers published in the cities of New York and Boston. One-third of the entire issue of this stock, present in person or by proxy, shall constitute a quorum. Nor will the company increase the issue of these certificates of stock without consent obtained as above. These certificates of stock shall be transferable by delivery or by transfer on the books of the company in the city of New York, after a registration of ownership certified thereon by the transfer agent of the company.

"Countersigned:

"American Loan & Trust Company, ———, President.

"By ———. ———, Secretary.

"New York, June 19, 1886.

"Shares, $100 Each.

"The Toledo, St. Louis & Kansas City Railroad Company will pay to bearer, on the first day of January, 1898, upon the surrender of this warrant at its office or agency in the city of New York, any amount that may be due hereon, under the conditions set forth in the certificate of stock to which this is attached, not exceeding the sum of twenty dollars.

"Coupon No. 20. No. —.

"Isaac White, Secretary."

The Continental Trust Company answered this Hamlin cross bill, and denied all the averments bearing upon the validity of the bonds. This cross bill was filed in behalf of all holders of preferred stock who might elect to come in as co-complainants, and, by direction of the court, advertisement was made by the master requiring all holders of preferred stock, who desired to become co-complainants with the Hamlins, to do so within a stated time.

One Dana A. Rose, claiming to be a holder of such shares, not content to become a co-complainant with the Hamlins, filed a separate intervening petition, in which he not only attacked the validity of the bonds issued by the railroad company, but the validity of the clause in the preferred stock certificates providing that such stock should be a lien upon the property of the railroad company next after the first mortgage. This, having been filed without leave, was stricken from the files, and several motions intended to make issues upon the averments of his pleading were denied. This refusal of the court to admit him as a defendant, with the right to file a separate cross bill in behalf of himself and such other holders of preferred shares as might elect to come in under his pleading, is the occasion for a separate appeal by said Rose. Under the creditors' bill of Stout and Purdy, issues as to the validity of the bonds were presented by the answer 5 or intervening petition of the same creditors who had answered the foreclosure bill. These petitions or answer 5 attacked the validity of all the bonds upon the ground that they had been sold for less than 75 per cent. of their par value, in violation of a statute of the state of Ohio, and also attacked the validity of about one-half the bonds upon the ground that they had been sold to a director of the railroad company for less than par, in violation of section 3313, Rev. St. Ohio. Another issue was made between the railroad company and the holders of preferred stock, upon the ground that the clause in the certificates issued making said preferred stock a lien upon the property of the company had been inserted through fraud, and without the authority of the railroad company. Still another issue was tendered by one of the intervening petitions filed in the foreclosure suit by a general creditor of the railroad company, namely, whether or not the Toledo, St. Louis & Kansas City Railroad Company was a corporation de jure or de facto. This attack is based upon the averment that there was no law under which the constituent companies could become a consolidated corporation. An order was made requiring the master in the creditors' suit to make publication requiring all creditors within a given time to file their claims, and giving notice as to the time and place when and where a hearing upon all claims would be had, and fixing a time within which objections to such claims might be filed. Under this order, a large number of claims were filed, including the claim of the mortgage bondholders. Unsecured creditors filed, in opposition to the allowance of the bonds, objections going to the existence of the mortgagor corporation, the validity of the mortgage, and the validity of the bonds. After the issues had been thus made up, motions were filed by the appellants

Digitized by Google

as follows: (1) To dismiss the foreclosure bill for want of jurisdiction, on the ground that the necessary diversity of citizenship did not exist, as shown by the face of the bill; (2) to set aside the order consolidating the creditors' bill with the foreclosure suit. These motions, together with others of like purport, were overruled.

Upon the issues thus raised a vast amount of evidence was filed, constituting now a printed record of 4,000 pages. Upon a final hearing, the circuit court in the foreclosure suit decreed as follows: First. That the entire property of the railroad company was lawfully within the exclusive custody and possession of the circuit court under the creditors' bill of Stout and Purdy, and that this fact gave the court jurisdiction to entertain the subsequent foreclosure bill, notwithstanding the requisite diversity of citizenship did not exist to give the court jurisdiction upon that ground. Second. That the railroad company was, at least, a corporation de facto, and that its corporate character was not open to attack by either the corporation itself, or any stockholder, or any creditor who had dealt with it as such. Third. That the bonds were not sold for less than 75 per cent. of their par value, as charged. Fourth. That none of the bonds had been sold at less than par by the railroad company to a director. Fifth. That the mortgage securing the bonds was valid, and the bonds unaffected by fraud. Sixth. That the holders of preferred stock were entitled to a preference over the common stock in the distribution of the surplus of the railroad company's property, after payment of debts, and might become purchasers of the property at the sale ordered, using their shares to pay their bid, after paying into court in money a sufficient amount thereof to pay off the mortgage debt and all other debts of the railroad company, established in this or the creditors' suit, and all costs, etc., provided they should take the property subject to a lien to secure any other debts of the corporation which might be at any time established as a valid subsisting liability. Seventh. The property was ordered to be sold for the satisfaction of the mortgage debts, costs, preferential claims, and any surplus over and above such secured debts to be paid into the registry of the court for distribution among the general unsecured creditors who had or might establish their claims under the pending creditors' suit. Eighth. In the creditors' suit the court entered a decree reciting the proceedings in the foreclosure suit, and awarding to the creditors, whose claims had been or might thereafter be established, any surplus arising from the sale in the foreclosure suit.

From both of these decrees the railroad company and certain unsecured intervening creditors have appealed. The Hamlins have appealed from so much of the decree in the foreclosure suit as requires them, if they become purchasers, and use their preferred stock in payment of any part of their bid, to take the property subject to the claims of creditors of the railroad company, to the extent they shall so use such preferred stock. The facts are more fully stated in the two opinions of Taft, circuit judge, reported in 82 Fed. 642, and 86 Fed. 929, both of which opinions are also made a part of this record. These opinions are referred to for a more detailed statement of the facts and issues here involved, so far as not in conflict with the facts as heretofore or hereafter stated in the opinion of this court.

John S. Miller, for Rose.
Lawrence Maxwell, Jr., for Railroad Co.
J. D. Springer, for creditors.
Henry Crawford and E. C. Henderson, for Trust Co.
F. Speigelberg, for intervening and judgment creditors.
J. Treadwell Richards, for the Hamlins.
D. W. Sanders, for creditors.

Before LURTON, Circuit Judge, and SEVERENS and CLARK, District Judges.

LURTON, Circuit Judge, after making the foregoing statement of facts, delivered the opinion of the court.

Digitized by Google

The principal questions arising upon the assignment of errors filed by the railroad company or the intervening general creditors are these: (1) Did the court have jurisdiction to entertain the foreclosure suit? (2) If the court had jurisdiction, did it err in hearing and deciding the issues which were raised under the foreclosure suit without deciding all of the issues raised in the creditors' suit? (3) Did the court err in holding that the railroad company was at least a corporation de facto, and in dismissing the intervening petition of the Rhode Island Locomotive Works, based upon the insistence that the consolidated company was not a corporation de jure or de facto? (4) Did the circuit court err in holding that the bonds were not illegal under section 3290, Rev. St. Ohio? (5) Did the circuit court err in holding that the bonds were not void for violation of section 3313, Rev. St. Ohio? (6) Did the court err in holding that the preferred stockholders were entitled to a preference in the distribution of the property of the corporation, after the payment of debts, over the common stockholders? These questions can be most conveniently discussed in the order in which they have been stated, and in connection with such further facts as have application to the particular question.

1. As to the jurisdiction of the court to entertain the foreclosure bill: The foreclosure bill was not a suit between parties having the requisite diversity of citizenship to give a court of the United States jurisdiction upon that ground. The jurisdictional fact averred in the bill was the fact that the property covered by the mortgage was within the actual custody and control of the court in which the bill was filed, and was being operated under the order of the court by a receiver, whose custody was that of the court. The court's possession had been taken under a creditors' bill filed by Stout and Purdy, judgment creditors of the mortgagor railroad company, and was filed for the purpose of winding up the affairs of the company as an insolvent corporation, by marshaling liens, ascertaining debts, and bringing to sale the property of the company for distribution among all creditors who should come in according to their respective priority and right. That suit was, in every sense of the term, an administrative suit, brought not only for the benefit of Stout and Purdy, but of all other creditors of said railroad company. The required diversity of citizenship existed, and justified its being filed in a court of the United States. Under it the circuit court possessed full, complete, and exclusive jurisdiction and power to deal with the property of that company, and with all interests in it and with all controversies respecting it. Porter v. Sabin, 149 U. S. 473, 13 Sup. Ct. 1008. The priority of the mortgage and the validity of the bonds were admitted on the face of the bill, and, although the object of the suit was to ascertain all debts and marshal all liens, the mortgagees were not made defendants. To have done so would have defeated the jurisdiction, by making defendants persons whose citizenship was identical with that of the complainants. In this situation the mortgagees applied to the court for leave to file a bill to foreclose their mortgage. This exclusive custody and possession of the res by the court made the fact immaterial that some of the nec-

Digitized by Google

essary defendants to the foreclosure suit were citizens of the same state of which one of the mortgagees was a citizen. The jurisdictional fact lies in the subject-matter of the litigation, which was a claim against property in custodia legis. It is true that the court might have permitted the mortgagees to become parties to the creditors' suit by petition pro inter esse suo, and to have filed a cross bill for the foreclosure of their mortgage. In Morgan's L. & T. R. R. & S. S. Co. v. Texas Cent. Ry. Co., 137 U. S. 171–201, 11 Sup. Ct. 61, a cross bill was filed by a mortgagee brought before the court as a defendant by supplemental pleading under a bill filed by a creditor claiming priority over the mortgage. The mortgagee answered, and filed a cross bill for the foreclosure of the mortgage, and this was done. The supreme court was urged to reverse the decree of foreclosure upon the ground that the pleading under which foreclosure was ordered was not a cross bill, pure and simple, and, treated as an original bill, it could not have been maintained, for want of requisite diversity of citizenship. This contention was overruled, and the jurisdiction maintained, the court saying:

"And whether this bill will be regarded as a pure cross bill, as an original bill in the nature of a cross bill, or as an original bill, there is no error calling for the disturbance of the decree, because the court proceeded upon it in connection with the other pleadings. The jurisdiction of the circuit court did not depend upon the citizenship of the parties, but on the subject-matter of the litigation. The property was in the actual possession of that court, and this drew to it the right to decide upon the conflicting claims to its ultimate possession and control. Minnesota Co. v. St. Paul Co., 2 Wall. 609; Bank v. Calhoun, 102 U. S. 256; Krippendorf v. Hyde, 110 U. S. 276, 4 Sup. Ct. 27."

To the same effect are the cases of Gumbel v. Pitkin, 124 U. S. 131–156, 8 Sup. Ct. 379; Byers v. McAuley, 149 U. S. 608–618, 13 Sup. Ct. 906; Rouse v. Letcher, 156 U. S. 48, 15 Sup. Ct. 266.

The identical question arose in this court in the case of Compton v. Railroad Co., 31 U. S. App. 486, 522, 529, 15 C. C. A. 397, and 68 Fed. 263, where an original foreclosure bill was filed, and jurisdiction maintained solely upon the ground that the property was within the possession of the court through a receiver appointed in another foreclosure case. That case has been approved and followed in Lumley v. Railroad Co., 43 U. S. App. 476, 22 C. C. A. 60, and 76 Fed. 66, and in Blake v. Coal Co., 47 U. S. App. 753, 28 C. C. A. 678, and 84 Fed. 1014, where Judge Hammond, for the court, said, "Whether the auxiliary jurisdiction be marked by original bill, cross bill, or by intervening petition, diversity of citizenshp is not necessary to its maintenance."

2. Appellants contend that, if the foreclosure proceedings were in any sense of a dependent character, a single decree should have been entered, determining all the rights, equities, and priorities of all the creditors of the insolvent debtor, and that any creditor intervening in the creditors' suit was entitled to contest the claims of every other creditor coming into that suit, and that no proper decree could be entered until the amount and rank of every claim so filed had been determined, and all objections to such claims had been determined, and that the foreclosure decree was therefore premature and erroneous. We quite concur in the view taken by the circuit

Digitized by Google

court of the relation of the one suit to the other, and of the consequences of this sort of jurisdictional dependency. In justification of the order allowing the foreclosure suit to be filed as an independent bill, and directing consolidation of the creditors' suit with, and under the style of, the foreclosure suit, the circuit judge said:

"It cannot be of importance that the bill was apparently filed as an independent bill. If, in fact, the only way of maintaining jurisdiction of it is as a dependent bill, ancillary to the creditors' action, it is the duty of the court so to treat it, provided it appear, as it does, that it can be maintained as such. But care must be taken not to give too much effect to the dependence of one suit on the other for jurisdictional purposes. Such dependence does not throw both suits into hotchpot, and dispense with the ordinary rules of pleading and practice as to parties proper and necessary to each cause of action. Because the res acquired under the original bill gives ancillary jurisdiction to entertain a dependent bill seeking relief in respect of the res, parties to the original bill are not thereby made parties to the dependent bill. The parties to the original bill have no more right to intervene in the dependent cause than if the court had independent jurisdiction thereof. Hence the rule as to who may appear to a foreclosure bill and file answers is the same here as if the bill had in fact been an independent bill. In other words, the relation between the two suits is principal and ancillary only so far as that, without possession of the res in the former suit, the court would have no jurisdiction of the latter; but, having thus acquired and thus maintaining its jurisdiction in the second suit, the court proceeds in it without further regard to the pleading or course of the principal action." Continental Trust Co. v. Toledo, St. L. & K. C. R. Co., 32 C. C. A. 44, 87 Fed. 133.

It was not error, therefore, to hear the foreclosure suit upon the issues properly made between those who were parties to that suit. Nor was it necessary that the court should refuse a decree enforcing the mortgage because the rank and amount of other claims filed in the creditors' suit had not been ascertained. The mortgage debt, if valid, was the prior lien; and we know of no principle which would require the court to refuse a decree of foreclosure because there were unsettled controversies between the mortgagor and unsecured creditors, or between the company and different classes of stockholders. The very object in filing an original foreclosure suit was to avoid the delay and complications incident to a general administration suit. This object would be utterly defeated if the contention of appellants is to be sustained. The consolidation of the two suits was within the sound discretion of the court. Section 921, Rev. St. U. S., applies as well to suits in equity as suits at law. Fost. Fed. Prac. § 371; Andrews v. Spear, 4 Dill. 472, Fed. Cas. No. 379; Wabash, St. L. & P. Ry. Co. v. Central Trust Co., 23 Fed. 513. Such consolidation is primarily but an expedient adopted for saving costs and delay. Each record is that of an independent suit, except in so far as the evidence in one is, by order of the court, treated as evidence in both. The consolidation does not change the rules of equity pleading, nor the rights of the parties, as those rights must still turn on the pleadings, proofs, and proceedings in their respective suits. The parties in one suit do not thereby become parties in the other, and a decree in one is not a decree in the other, unless so directed. It operates as a mere carrying on together of two separate suits supposed to involve identical issues, and is intended to expedite the hearing and diminish the expense. Brevard v. Summar,

Digitized by Google

2 Heisk. 97–105; Lofland v. Coward, 12 Heisk. 546. The practice seems to be one not well established in English courts of equity, and, though admissible, to be sparingly exercised, inasmuch as it may often operate to force litigants together against their will, and without real advantage. Knight v. Ogden, 3 Coop. 409. The bringing on of the two suits for hearing together does not avoid the necessity of separate decrees in each case. Nor does the fact that the two suits have been consolidated require that every issue under each suit should be heard at the same time. So far as these suits turned upon the same issues, they were heard together, and the decree respecting those issues was entered in each case. We see no error in the refusal of the court to suspend a final decree in the foreclosure suit to await a final decree upon all the issues arising upon the numerous interventions in the creditors' suit. So far as such issues were common, as involving the validity of the bonds, they were heard and decided.

3. Certain general creditors, parties to the foreclosure suit, have challenged the validity of the agreement under which the Toledo, St. Louis & Kansas City Railroad Company claims existence as a valid consolidated corporation of Ohio, Indiana, and Illinois. This consolidated corporation was organized June 19, 1886, the constituent companies being the Toledo, Dupont & Western Railway Company of Ohio, a corporation owning that part of the consolidated line lying within the state of Ohio; the Bluffton, Kokomo & Southwestern Railroad Company of Indiana, a corporation owning that part of the consolidated line lying within Indiana; and the Toledo, Charleston & St. Louis Railroad Company of Illinois, a corporation owning that part of the consolidated road lying in the state of Illinois. These creditors aver that the purported consolidation of these constituent companies was illegal and unauthorized by any law of the states within which said railways exist, and that the said Toledo, St. Louis & Kansas City Railroad Company is neither a corporation de jure nor de facto. Upon this ground these defendants or petitioners aver that the mortgage made by the consolidated company is void, and the bonds secured thereunder unenforceable. All of the appellants who made this question dealt with the consolidated company as a corporation, and all hold claims for debts contracted by it as a corporation. It is not debatable but that a de facto corporation is estopped to deny its existence as a corporation for the purpose of defeating liability upon contracts incurred by it while pretending to be acting as a corporation. The same estoppel extends to the stockholders of such a de facto corporate organization, and to other persons who have dealt with it as such. Mor. Priv. Corp. § 750; Commissioners v. Bolles, 94 U. S. 104; Close v. Cemetery, 107 U. S. 466–477, 2 Sup. Ct. 267; Ashley v. Board, 16 U. S. App. 656, 8 C. C. A. 455, and 60 Fed. 55; Farmers' Loan & Trust Co. v. Toledo, A. A. & N. M. Ry. Co., 67 Fed. 49; Dallas Co. v. Huidekoper, 154 U. S. 654, 14 Sup. Ct. 1190; Society Perun v. Cleveland, 43 Ohio St. 481, 3 N. E. 357; Andes v. Ely, 158 U. S. 312–322, 15 Sup. Ct. 954. It is not contended that there was not authority under the law of Indiana to bring about a consolidation. The conten-

Digitized by Google

tion is that there was no authority under either the law of Illinois or Ohio to authorize a consolidation of the constituent companies comprising the mortgagor consolidated company. There was at the time of the consolidation in question a statute of the state of Illinois which provided as follows:

"Whenever any railroad which is situated partly in this state and partly in one or more other states, and heretofore owned by a corporation formed by consolidation of railroad corporations of this and other states, has been sold pursuant to the decree of any court or courts of competent jurisdiction, and the same has been purchased as an entirety, and is now or hereafter may be held in the name or as the property of two or more corporations incorporated, respectively, under the laws of two or more of the states in which said railroad is situated, it shall be lawful for the corporation so created in this state to consolidate its property, franchises and capital stock with the property, franchises and capital stock of the corporation or corporations of such other state or states in which the remainder of such railroad is situated, and upon such terms as may be agreed upon between the directors and approved by the stockholders owning not less than two-thirds in amount of the capital stock of such corporation." 3 Starr & C. Ann. St. Ill. p. 3241.

Section 3380 of the Revised Statutes of Ohio was in these words:

"A company organized in this state for the purpose of contracting, owning and operating a line of railway, or whose line of road is made or is in process of construction to the boundary line of this state, or to any point either in or out of the state, may consolidate its capital stock with the capital stock of any company in an adjoining state organized for a like purpose, and whose line of road has been perfected, constructed, or is in process of construction to the same point where the several roads, so united and constructed, will form a continuous line for the passage of cars."

The contention is that the constituent companies forming the present consolidated company did not have the requisites essential to a valid consolidation under the law of either state. This Illinois act set out above was evidently intended to permit the reconsolidation of the dismembered constituents of a former consolidated line, where the original consolidation included an Illinois railroad, and where such consolidated line has been sold as an entirety, and is at the time held as the property of two or more corporations under the laws of two or more states. If, therefore, we find that the constituent companies which undertook to unite themselves by a consolidation had theretofore been so united as to constitute a consolidated railroad company, and that their original union had been dissolved as a consequence of judicial sale, and that the original consolidated line had been "purchased as an entirety," and was at date of reconsolidation "held in the name or as the property of two or more corporations incorporated, respectively, under the laws of two or more of the states," all the conditions would exist which under the law of Illinois would authorize the organization of a de jure consolidated corporation. But suppose some one of these conditions did not in fact exist, and that, notwithstanding this absence of some of the qualifications prescribed, a consolidated corporation had been organized, claiming to be a consolidated corporation under the law of Illinois; will the fact that the organization thus formed would not be a de jure corporation operate to deprive the company so organized of its character as a de facto corporation? We think not. The fact that there might be under the law of Illinois a con-

Digitized by Google

solidated company composed of an Illinois corporation and corporations of other states, with the powers claimed by the Toledo, St. Louis & Kansas City Railroad Company, would constitute it a de facto corporation, although the particular companies thus united might not possess all of the qualifications required by the Illinois statute. A defect in the qualification of some of the constituent companies might affect the de jure character of such an organization, and, when challenged by the state, demand a judgment of ouster. The test of a de facto corporation is this: Was there a law under which there might have been a de jure corporation of the kind, character, and class to which the organization in question apparently belongs? It is the apparent legality of the organization which gives it its de facto character. If there was no law under which an Illinois consolidated corporation could exist, there could be no de facto consolidated corporation. The possibility of a de jure corporation is the only condition requisite to a de facto corporation. It is not a sound test that the particular constituents could not have become a de jure consolidated corporation. That would open every such organization to parol attack, and destroy its de facto character, not by showing the impossibility of a de jure corporation of the kind in question, but by evidence affecting the internal history of the parts composing the whole. Suppose the law had permitted any two noncompeting railroad companies to consolidate; would it be admissible to destroy the de facto consolidation of two railroad corporations by evidence that they were in fact competing companies? We think not. The sovereign power of the state might by a proper proceeding dissolve the union, as one not authorized by law; but neither the corporation itself, nor its members, nor those who dealt with it as a corporation, would be allowed to deny its de jure character for the purpose of defeating liabilities incurred in its character as a corporation. The cases of State v. Vanderbilt, 37 Ohio St. 590, and State v. Atchison & N. R. Co., 24 Neb. 143, 38 N. W. 43, hold that the consolidation of railroads not forming continuous lines, where the statute makes that a condition or qualification, were both suits by the state, directly and not collaterally attacking the de jure character of the consolidation. We find nothing in the case of Norton v. Shelby Co., 118 U. S. 425, 6 Sup. Ct. 1121, which militates against this conclusion. The court was there dealing with the validity of the acts of persons claiming to be de facto incumbents of an office which did not and could not exist de jure. But the whole line of reasoning adopted by the court, and the general trend of the cases cited, establish the proposition that the disqualification of the particular incumbent to be a de jure officer will not affect the validity of the acts of the incumbent, if there was a de jure office. The cases of Carleton v. People, 10 Mich. 250–259, Clark v. Com., 29 Pa. St. 129, and Blackburn v. State, 3 Head, 690, all illustrate the proposition that the incumbent of an office is a de facto officer, notwithstanding his personal disqualification or the illegality of his appointment, when there is a de jure office. The principle has application to the question of the de facto character of a corporation. The disqualification of the corporators or of the constituents composing a consolidated corporation

Digitized by Google

does not affect the validity of the acts and contracts of the organization, if there was a law under which there might have been a de jure consolidated corporation of the class to which the de facto corporation belongs. This question was directly considered by this court in the case of Ashley v. Board, 16 U. S. App. 656–668, 8 C. C. A. 455, and 60 Fed. 55,—a case in which was involved the validity of bonds issued by the county of Presque Isle, in the state of Michigan. It was claimed that the bonds were void because the constitutional conditions did not exist necessary to the organization of the territory constituting that county into a de jure county. This court held that this fact of the ineligibility of the territory constituting the county for legal organization into a constitutional county could not be inquired into by anybody save the state, and that a corporation was a de facto corporation, which "is of a kind which is recognized by, and its existence consistent with, the paramount law and the general system of law in the state."

The principles we have been discussing have application to the objections urged against this consolidation under both the Illinois and Ohio law. The objections made to the eligibility of the constituent companies to unite themselves as a consolidated corporation under the Illinois law above set out are these: First, that the railroad now owned by the Toledo, St. Louis & Kansas City Railroad "was not owned, prior to the attempted consolidation, by a corporation formed by consolidation of railroad corporations of Illinois and other states." The fact is that prior to 1886 there was a line of narrow-gauge railroad extending from Toledo, in Ohio, across the states of Indiana and Illinois, to East St. Louis, on the western border of the latter state. That railroad was 450 miles in length, and is the same railroad owned and operated by the present consolidated company. Prior to 1886 it was owned or operated as one line by a consolidated corporation of the states of Illinois, Indiana, and Ohio, called the Toledo, Cincinnati & St. Louis Railroad Company, called hereafter, for brevity, the "Narrow-Gauge Company." Counsel for appellants say that the Narrow-Gauge Company "did not own a section thereof sixty-seven miles in length, extending from the city of Frankfort, Indiana, to the boundary line between the states of Indiana and Illinois." It would uselessly incumber this opinion to set out at length the precise relations and rights of the Narrow-Gauge Company to and in this link of 67 miles. It is enough to say that the legal title to that section was in a corporation of Indiana known as the Frankfort & State Line Railroad Company. This company entered into a contract for the construction of its line of railroad with a construction company, whereby it agreed to execute a mortgage and issue its bonds, and to deliver them to the construction company, together with all of its shares of capital stock, save a small proportion necessary to fulfill contracts with municipal subscribers to its stock. This line of projected railway was identical with part of the line projected by the Narrow-Gauge Company, and the latter company contracted with the same construction company for the construction of a division of its line 270 miles in length, which included the section covered by the line of the Frankfort Company's railroad. Under an agreement be-

Digitized by Google

tween the Narrow-Gauge Company upon the one side, and the construction company on the other, known to and approved by the Frankfort Company, the latter did not make a mortgage or execute any bonds as contemplated, but the Narrow-Gauge Company assumed the debts and liabilities of the Frankfort Company to the construction company, and the latter company assigned to the Narrow-Gauge Company the capital stock of the Frankfort Company, and received in payment for the construction of the Frankfort Company's part of the line, and in performance of its contract with the Frankfort Company, the mortgage bonds of the Narrow-Gauge Company. All this was done with the full knowledge and agreement of the Frankfort Company, and with the mutual purpose and understanding that there should be a technical consolidation of the two corporations. When the road was constructed, it was turned over to the Narrow-Gauge Company, and operated as a part of its line of railroad. The actual technical consolidation was postponed on account of its possible effect upon certain municipal subscriptions to the capital stock of the Frankfort Company. Having paid for the construction of the Frankfort Company's railroad under the arrangement stated, having assumed all the obligations of the Frankfort Company, and being the owner of practically all of its capital stock, and in possession and operation under an agreement for a future consolidation of that section as a part of its own line, we are of opinion that this equitable ownership of that section was sufficient to constitute it a part of a railroad "heretofore owned by a corporation formed by consolidation of railroad corporations of this [Illinois] and other states," within the meaning and fair intent of the Illinois act, and that the mere outstanding legal title to that section affords no solid objection to the eligibility of the constituent companies to organize a de jure consolidated corporation under the law of Illinois.

But it is said that the old consolidated narrow-gauge railroad was not "purchased as an entirety," under the decree of a court having jurisdiction. It appears that the narrow-gauge railroad company had mortgaged its railroad as two separate divisions. That part of its line from Toledo to Kokomo was known and mortgaged as its "Toledo Division," and that portion from Kokomo to East St. Louis was known and separately mortgaged as its "St. Louis Division." These two mortgages were necessarily foreclosed under distinct decrees. These two divisions were sold on the same day, and confirmed on the same day, to Sylvester H. Kneeland, and both divisions were conveyed to him by a single master's deed, dated March 10, 1886. Subsequently Kneeland organized a corporation in Ohio, to which he conveyed so much of this line as was situated in Ohio, and also organized corporations in Indiana and Illinois, to which he conveyed, respectively, so much of the said railroad as was situated in each state. In thus buying said entire line of railroad, Kneeland was acting as the trustee for the holders of all the bonds, and with a view and under a contract for a reorganization and reconstruction of said line of road, and in accordance with this purpose and agreement of the beneficial owners, these three constituent companies were aft-

Digitized by Google

erwards consolidated, and became the present mortgagor consolidated company.

Upon the facts stated, we hold that the said railroad was "purchased as an entirety," within the meaning of the Illinois statute, and that the constituent companies were, under that statute, eligible to form a de jure consolidated corporation. Thus is it to our minds clear that, under the law of both Indiana and Illinois, a de jure consolidation was not only possible, but was a fact brought about. But it is said that the Ohio statute only permits the consolidation of an Ohio corporation with that of an adjoining state, and that, Illinois not being adjoining to Ohio, the attempted consolidation was unwarranted. Concededly, the Ohio company could have consolidated with the Indiana company. So, the Indiana company could have consolidated with the Illinois company. The objection goes, then, only to the order in which these three companies united themselves. If the Indiana company had first united itself with the Illinois company, and that act had preceded its union with the Ohio company by but a single instant, no objection would lie. But, when the union of the Ohio corporation with the Illinois corporation occurred, it was a result of a coincident union of the Ohio company with the Indiana company, which was a corporation of an adjoining state. Such a simultaneous union with two companies, one being a corporation of an adjoining state, was a substantial compliance with the Ohio law, the prime object of which was to limit consolidation to connecting lines. The consolidation resulted in a de jure corporation.

4. This brings us to the question of the legality of the bonds issued by the consolidated company under section 3290, Rev. St. Ohio. That section is as follows:

"The directors of the company may sell, negotiate, mortgage or pledge such bonds or notes, as well as any notes, bonds, scrip or certificates for the payment of money or property which the company may have theretofore received or shall hereafter receive as donations, or in payment of subscriptions to the capital stock, or for other dues of the company, at such times and in such places, either within or without the state, and at such rates and for such prices, at not less than seventy-five cents on the dollar, as in the opinion of the directors, will best advance the interests of the company; and if such notes or bonds are thus sold at a discount, without fraud, the sale shall be as valid in every respect, and the securities as binding for the respective amounts thereof, as if they were sold at their par value."

The facts essential to be understood which have direct relation to this question were clearly and compactly stated in the opinion of the circuit judge, and are as follows:

"In 1882 the railroad that is the subject of this litigation was a narrow-gauge line, running from Toledo to St. Louis, and was owned by the Toledo, Cincinnati & St. Louis Railroad Company, a consolidated corporation of Illinois, Indiana, and Ohio. It was 450 miles in length. It had a total mortgage indebtedness of about $10,000,000, and a capital stock of the par value of $21,000,000. It was divided into two divisions. By two agreements, two committees, of five members each, were constituted to protect their respective interests in the purchase of the two divisions of the road then about to be sold, and to effect a reorganization of the two divisions, united in one road, upon a plan stated in the agreements. The plan embraced the issue of first mortgage bonds to the extent of $15,000 a mile with which to rebuild and widen the gauge of the road, and the issue of $7,000,000 of second mortgage bonds with which to take up the first mortgage bonds of the two divisions. The agreement gave the

Digitized by Google

trustees very wide powers and discretion in the working out of the scheme of reorganization. In the latter part of 1885, James M. Quigley, who was chairman of the two committees, made a preliminary contract with S. H. Kneeland, by which Kneeland agreed to bid in the two divisions of the old road at the foreclosure sale, to be held in the following January, and to advance the cash which it was necessary to deposit in order to become a bidder at the sale. The preliminary agreement looked to a subsequent agreement by which Kneeland was to be given the first mortgage bonds on the narrow-gauge road, and with them to assume all the obligations of the purchaser imposed by the decree for sale, to convey the road to a newly-organized consolidated corporation of Ohio, Indiana, and Illinois, and, as contractor, to rebuild the road and widen its gauge. Kneeland made the necessary deposits, and bid in the two divisions at the sale. Upon January 23, 1886, after the sale, he made with the two bondholders' committees the two contracts under which the bonds here in controversy were subsequently issued. The agreements are in all substantial respects similar. By these contracts, Kneeland on his part agreed: (1) To complete the purchase in accordance with the terms of the decree, which required the purchaser to pay off receiver's certificates and other underlying liens prior in right to the first mortgage bonds. (2) To form three corporations, of Ohio, Indiana, and Illinois, respectively, to each of which he would convey the part of the road lying in the state of its organization, and then to consolidate them into a corporation of the three states. (3) That the consolidated corporation should change the gauge of the road from narrow to standard width; lay down steel rails of not less than 60 pounds to the yard of main line; widen all embankments and cuts to the requisite width; widen, strengthen, and rebuild bridges as the same might be necessary; construct all necessary stations, tanks, houses, repair shops, and sidings, so that the said road, reaching from Toledo to East St. Louis, should 'in all respects be a first-class road of standard gauge'; equip the road with all necessary cars of every description, and with requisite motive power; and use, of the $1,000 bonds of the company to be issued, the proceeds of at least four per mile in the purchase of the equipment. (4) Kneeland agreed to complete the construction and equipment, and deliver the road to the new consolidated company, on or before the 1st of July, 1888, unless he encountered unforeseen obstacles, in which case the bondholders' committees were to have the power to extend the time for one year. (5) To pay the interest that might accrue on the newly-issued mortgage bonds, pending the periods of construction. The net earnings of the company during this period were to be devoted to such betterments as seemed desirable to the company. (6) To pay all the expenses of the two committees in litigation and reorganization and their compensation. It was further provided that, as a consideration for the performance of these obligations, the consolidated company would be required (1) to issue $9,000,000 of 6 per cent. bonds, or $20,000 a mile, secured by a first mortgage; (2) to issue $5,805,000 of nonvoting stock, in $100 shares, having coupons attached payable semiannually, at the rate of 4 per cent. per annum if earned, but noncumulative, and convertible into common stock after five years, and before ten years, and, if not converted, to become a preferred 4 per cent. noncumulative nonvoting stock; (3) to issue $11,250,000 of common stock, or $25,000 a mile; (4) to issue the bonds, preferred stock, and common stock at once to two trustees, one to be selected by Kneeland, and the other by the bondholders' committee, for distribution. According to the contract, the trustees were (1) to deliver to Kneeland $2,000,000 in bonds and $2,500,000 in common stock at once; (2) thereafter, as the work of construction and equipment progressed, to deliver the remaining bonds and common stock to Kneeland according to the value of the work done and equipment furnished, as certified by the chief engineer of the company; (3) to deliver $1,000,000 of the preferred stock to Kneeland to aid in the purchase and payment of the underlying liens, as the satisfaction of the same should be certified by the clerk of the court; (4) to deliver $4,805,000 in preferred stock to the holders of the old narrow-gauge first mortgage bonds, on the basis of 15 shares, of $100 each, for one bond of $1,000 on one division, and 10 shares for one bond on the other division. It is further provided that the bondholders' committee (1) should deliver all their first mortgage narrow-gauge bonds to Kneeland to enable him to complete his contract of purchase;

Digitized by Google

and (2) should litigate all claims made for liens prior to these bonds as he should request, but at his expense.

"Soon after the signing of the contracts, Kneeland proceeded to organize three corporations,—one of Ohio, called the Toledo, Dupont & Western Railway Company; one of Indiana, called the Bluffton, Kokomo & Southwestern Railroad Company; and one of Illinois, called the Toledo, Charleston & St. Louis Railroad Company. To the first, by deed of June 12, 1886, he conveyed all of the railroad lying in Ohio in consideration of all its capital stock; to the second, by deed of June 11, 1886, he conveyed all of the railroad lying in Indiana in consideration of all its capital stock; and to the third, by deed of April 1, 1886, he conveyed all of the railroad lying in Illinois in consideration of its capital stock. At the same time he made contracts with the three companies of a similar character. It will be sufficient to state briefly his contract with the Ohio company. The recitals refer to the foreclosure proceedings of the old narrow-gauge consolidated company, the Toledo, Cincinnati & St. Louis, and Kneeland's purchase of the railroad at the foreclosure sale. Kneeland agreed to convey the Ohio part of the railroad to the Ohio company; agreed that the companies of Indiana and Illinois organized by him, to whom he would convey or had conveyed the remainder of the road, would consolidate with the Ohio company, so that a new consolidated company should become the owner of the continuous line from Toledo to East St. Louis; and agreed that the consolidated company should, without delay, broaden the gauge of the road to a standard gauge, should lay the track with steel rails weighing not less than 60 pounds to the yard, and should make said line a first-class standard-gauge railroad in all respects, and equip the same with proper rolling stock and motive power. The Ohio company, on its part, agreed—First, to issue all its capital stock to Kneeland; second, agreed that the consolidated company, formed as before provided, should issue, in full and complete payment for the broadening of the gauge, the reconstruction of the railroad, and its equipment, 'and for the purpose of exchanging some of said stock and securities with the holders of certain securities issued by the companies heretofore owning and controlling said railroad and property, or portions thereof, for the payment of certain debts, underlying liens, rights of way, and other corporate purposes,' $9,000,000 of bonds, $11,250,000 of common stock, and $5,805,000 of preferred coupon convertible stock. The three corporations were then consolidated, and the organization of the new company was effected on the 19th of June, 1886. The articles of incorporation of the consolidated company described the preferred stock as follows: 'Of said capital stock, $5,805,000, being 58,050 shares thereof, shall be four per cent. preferred coupon convertible stock, with right to vote only after conversion.' The articles of association of the consolidated company provided that the first board should consist of James M. Quigley, Isaac W. White, and Robert G. Ingersoll, of New York, together with ten others named thereof, and that the first officers of the company should be James M. Quigley, president, and Isaac W. White, secretary and treasurer. The first meeting of the stockholders and directors was held on the 19th of June, and Quigley was elected president, and White secretary and treasurer, accordingly. The board of directors then passed resolutions authorizing the issue of the bonds and stock provided in the articles of association and the contracts of January 23, 1886. There was no formal confirmation of the contracts of January 23, 1886, by the board of directors of the company, but they proceeded at once to conform to the provisions of the contracts in the issue of the stock and bonds, and in their delivery to trustees. Kneeland selected Robert G. Ingersoll as his trustee, and the bondholders' committee selected Isaac W. White as their trustee, the two to hold the bonds and stock, and deliver the same to Kneeland, as the contract required."

The negotiable character of these bonds has been questioned, because it is said the time of payment is uncertain, in view of the option given to the holders of one-half the entire issue to precipitate their maturity for default in interest, and because the amount payable is uncertain, in view of the provision that "all payments of principal and interest shall be made free and clear of all taxes." We ex-

Digitized by Google

press no opinion upon this question, as we find it unnecessary, in view of our conclusions upon the question of the legality and validity of the bonds themselves.

The bonds and stocks thus placed in the hands of Ingersoll and White, as trustees, were from time to time, as the work of reconstruction and re-equipment progressed, delivered to Kneeland, and have passed finally into the hands of holders, many of whom are unknown. The contention is that the railroad company did not realize for its bonds the minimum price at which the bonds might be sold under this contract with Kneeland, and that, therefore, the holders of these bonds who do not establish their title as bona fide holders, for value and without notice, can, at most, recover only the actual money value or money's worth received by the company, and not the amount of their investment. Without at this point deciding whether this question has been properly raised or can be by any of the appellants, we shall examine the question upon its merits. The trial court found upon the evidence that the money value of that which Kneeland did under his contract and the money value of the benefit received by the company for the bonds amounted to the price of 76.6 per cent. of the par of the bonds, and that there had been, therefore, no violation of this provision of the Ohio law. After a careful consideration of this vast volume of evidence, we concur with the circuit court in finding that the price realized by the company for their bonds was in excess of the limit fixed by the Ohio statute. The amounts paid out by Kneeland in performance of his contract, as found by the circuit court, aggregated $10,305,106. This consisted of the following items:

Construction disbursed through Crowell	$ 3,509,317
Steel rails	1,528,179
Iron bridges, etc	500,000
Allowed by Kneeland for completion of road	100,000
For interest on bonds down to June 1st, 1891	1,766,465
For equipment	1,314,071
For lien claims prior to mortgage	650,247
Profit—10 per cent. on cash paid out	936,827
	$10,305,106

From this aggregate value of benefits received the court deducted the following items, in order to arrive at the net value actually received by the company for its bonds:

Market value of common stock issued to Kneeland at 15 per cent	$1,687,500
Market value preferred stock issued to Kneeland at 30 per cent	300,000
Value of old materials received by him	200,000
Net earnings received by him for year ending June 30, 1889	200,000
Net earnings received by him for year ending June 30, 1890	470,352
Net earnings received by him for year ending June 30, 1891	549,962
	$3,407,814

This aggregate of payments to Kneeland, other than in bonds, being deducted from total value of benefits received by the company under the contract with Kneeland, leaves $6,897,292, which is the value actually received by the company for $9,000,000, or 76.6 of par. The criticism of counsel for appellants upon this method of arriving at the consideration received for the bonds is chiefly this: That the

Digitized by Google

bonds and the stock furnished, together, the consideration paid Kneeland for the construction and equipment of the road, and for the payment of the preferential liens upon the property of the old company, and that, if any apportionment is to be made, the only one which would carry out the intention of the parties "would be to apportion the consideration ratably upon the three classes of securities." Thus apportioned, the consideration for the bonds would necessarily be less than 75 per cent. of par. We are unable to appreciate this objection. To adopt such a construction of the contract of January 23, 1886, would be to assume that the parties attached a value to the stock which it did not have, and which could not have been obtained. The common stock had little, if any, actual value, and only such market value as Kneeland's dealings in it created for it. This value the court found to be 15 cents upon the dollar. This is a liberal allowance. The preferred stock had a probable market value of 30 per cent. No statute forbade the sale of either class of stock at its marketable value, either for money or in payment for construction of its railroad, unless section 3313, Rev. St. Ohio, forbidding a sale of bonds or stock to a director, has application to such a contract as was made with Kneeland, when made with a director. In Fogg v. Blair, 139 U. S. 118–126, 11 Sup. Ct. 476–478, the bill of a judgment creditor was dismissed upon demurrer which averred that the defendant had received for construction work the mortgage bonds of the company to the full value of the work done, and capital stock to a like amount as a bonus. The court said that it was competent for the company to use its bonds and stock in payment for the construction of its road. But that it could not do so without exercising good faith, and obtaining a reasonable equivalent. In discussing the question of the value of the stock, Justice Harlan said:

> "What was such an equivalent depends primarily upon the actual value of the stock at the time it was contracted to be issued, and upon the compensation which, under all the circumstances, the contractors were equitably entitled to receive for the particular work undertaken, or done by them."

It is impossible to suppose that the parties intended to treat these securities as of equal actual or market value, and there is no reason why so improbable a view of the contract shall be taken.

There is, however, a view of the contract under which the price received for the bonds and stock together would be the reconstructed and re-equipped railroad. The contract with Kneeland was but a plan for the reorganization and sale of the old narrow-gauge railroad, reconstructed and re-equipped. The original parties thereto were the first mortgage bondholders of that company, acting through their committee, and S. H. Kneeland. The plan was that Kneeland should buy in the mortgaged property for them, for this purpose using their bonds as far as they would go in satisfying his bid, and advancing for them the cash necessary to make the requisite money payment required by the decree of foreclosure, and for paying the claims adjudged to be entitled to priority over their bonds. Thus these mortgage bondholders were to become, through Kneeland's purchase, the beneficial owners of the narrow-gauge railroad. But the scheme went further. There was to be organized a corporation to which

Digitized by Google

these owners should convey this property for purposes of operation. Hence the agreement that Kneeland should first organize three corporations, one in each state within which the road was situated, and convey to each such corporation that part of the railroad within the state of each corporation, and then consolidate these companies, so that the road in its entirety should be held by one corporation organized under the law of each state. The conversion of this narrow-gauge road into one of standard gauge, and to re-equip it according to the necessities of the changed gauge, was deemed wise and prudent in order to secure the possibility of some return for the large investment by these beneficial owners. Thus a part of the plan of reorganization required that the road should be reconstructed and re-equipped, that it might be in all respects a first-class standard-gauge railroad. This Kneeland also undertook to do, and the method adopted was that the consolidated company should obligate itself to the constituent companies to thus reconstruct and re-equip the said railroad. For this purpose, and for the purpose of paying to the beneficial owners of the old property the price for which they consented to sell the same to the reorganized company, the consolidated company was obligated, as a condition upon which it received this property, to issue $9,000,000 of first mortgage bonds, $11,250,000 of common stock, and $5,000,000 of preferred stock; making a total capitalization of $25,250,000. This, in the last analysis, constituted the price to be paid for this property in its reorganized, reconstructed, and re-equipped condition, and was a price which the beneficial owners of the property required the reorganized corporation to pay for the property. The price was to be distributed thus: To Kneeland, in consideration for the payment of all costs and liens prior to the mortgage bonds, and for the re-equipment and reconstruction of the railroad, and in consideration that he would pay the interest on the bonds during the period of reconstruction, $9,000,000 of mortgage bonds, $11,250,000 of common stock, and $1,000,000 of preferred stock. To the old mortgage bondholders, for their interest in the old property, $4,000,000 in preferred stock. It is difficult to see any solid distinction between this reorganization contract and that sanctioned in Railroad Co. v. Dow, 120 U. S. 287, 7 Sup. Ct. 482. That case involved the reorganization of an Arkansas railroad which had been bid in by a trustee for the bondholders at a foreclosure sale, and subsequently conveyed by the trustee to a new corporation in consideration for the bonds and stock of the new company to be issued to the beneficial owners. The amount received by them was $1,300,000 in stock and $2,600,000 in mortgage bonds. The railroad company resisted liability upon the bonds upon the ground that the full value of the property conveyed to it did not exceed $1,300,000, the amount at which the capital stock was fixed, and that it therefore followed that the $2,600,000 in bonds was without any consideration, and represented only a fictitious indebtedness. A provision in the constitution of Arkansas (article 12, § 8) provided that "no private corporation shall issue stock or bonds, except for money or property actually received, or labor done; and all fictitious increase of stock or indebtedness shall be void." The court held that this provision "did not

Digitized by Google

necessarily indicate a purpose to make the validity of every issue of stock or bonds by a private corporation depend upon the inquiry whether the money, property, or labor actually received therefor was of equal value in the market with the stock or bonds so issued." "It is not clear, from the words used," said the court, "that the framers of that instrument intended to restrict private corporations—at least when acting with the approval of their stockholders—in the exchange of their stock or bonds for money, property, or labor, upon such terms as they deem proper: provided, always, the transaction is a real one, based upon a present consideration, and having reference to legitimate corporate purposes, and is not a mere device to evade the law and accomplish that which is forbidden. We cannot suppose that the scheme whereby the appellant acquired the property, rights, and privileges in question for a given amount of its stocks and bonds falls within the prohibition of the state constitution. The beneficial owners of such interests had the right to fix the terms upon which they would surrender those interests to the corporation of which they were to be the sole stockholders. And, that subsequent holders of stock might not be misled, each certificate of stock states upon its face that the holder takes this stock subject to $2,850,000 of mortgage bonds of the company, which are secured by two mortgages duly recorded. All that was done was to reorganize the Little Rock & Memphis Railroad Company upon the same basis, substantially, as to capital stock and bonded indebtedness, as existed, in respect to these properties, rights, and privileges, before the adoption of the state constitution, and while they were held and controlled by the companies which preceded the appellant in the ownership. There was, consequently, no fictitious increase by appellant of its stock or indebtedness. Under these circumstances, it cannot be fairly said that the bonds secured by the mortgage were issued without any consideration whatever actually received in property." The foundation of the title of the appellant railroad company to the property now owned and possessed by it was the contract of January 23, 1886, between Kneeland and the bondholders' committee. The entire issue of bonds and stock of the new consolidated corporation was, in its essence, but the purchase price paid by the new company for the railroad in its rehabilitated condition.

The principal distinction between the provision of the Arkansas constitution construed in Railroad Co. v. Dow and the Ohio statute involved here is that the latter prescribes a minimum price at which bonds may be lawfully sold. But we are not here dealing with a sale for money, but with an exchange of bonds and stocks for a completed railroad, including its franchises. In this aspect of the case, are the bonds illegal unless the actual money value of the railroad, as ascertained by evidence, shall prove to be equal to 75 per cent. of the par of the bonds, plus the market value of the stock, which was also used in the purchase? If so, the record discloses no such state of facts as would justify us in holding that the statute has been violated. Indeed, the evidence relied upon to support the claim that the statute has been violated has not been addressed to this aspect of the question. The circumstances would tend to show quite the

Digitized by Google

contrary. The old narrow-gauge road was bonded for nearly $10,000,000, and its capital stock exceeded that of the new company. This fact, taken into consideration with the fact that of the price so paid not less than $6,000,000 was to be expended in betterments upon the old road, and about $4,000,000 in paying underlying liens upon that road over and above the mortgage debt, and in a provision for the payment of interest upon the bonds so used for several years, tends strongly to establish that the actual value of the reconstructed railroad was equal to 75 per cent. of the par of the bonds, plus the value of the entire common and preferred stock, the first being estimated at 15 cents on the dollar and the last at 30. The Ohio statute did not forbid the sale or exchange of stock at its market value. Neither does it any more forbid the exchange of its bonds for a railroad, or their use in exchange for construction work, than did the Arkansas constitution. The most that can be said is that, if used in exchange for a railroad, or in payment for property or construction work, the railroad, or the property, or labor and materials, shall be the equivalent of the money price for which the bonds might be lawfully sold. Tried by this test, the appellants have not supported their averment. But, waving the aspect of the case presented by the assumption that all the bonds and all the stock, common and preferred, represent the price paid for the reconstructed and re-equipped railroad required by the contract of January 23, 1886, and treating the transaction as one between Kneeland and the consolidated company, by which the former, in consideration of the bonds and common stock and one million of the preferred stock, agreed to pay off all underlying liens, and convert the old narrow-gauge railroad into a first-class standard-gauge railroad, and provide for the interest upon the bonds during reconstruction, we reach the question as to what was the money value of the contract under which Kneeland acquired the bonds. The price for which the bonds were sold was the money value of the obligations entered into by Kneeland; not the money value of the contract as he performed it, but as he was obligated to perform. The circuit court entered into a calculation of the money worth of that which Kneeland did. Upon that basis the conclusion was reached that the company realized 76.6 of the par value of the bonds, after applying the stock paid him at its market value. With that result we agree. Allowing for certain supposed errors in the values attributed to benefits received, there were certain items omitted or underestimated which offset any deductions we might be disposed to make. The true question, however, is not the value of the benefits actually received, but the money value of what Kneeland agreed to do. The pleadings are full of averments that Kneeland did not carry out his contract, and that he is liable to the company in large sums for breaches of his engagement in many particulars. Some of the creditors of the company have even sought to invalidate the bonds upon the ground of fraud in the performance of his contract. All relief upon this ground was properly denied for the reason that a subsequent creditor of the corporation has no right to complain of a fraud upon his debtor which the debtor has waived or refuses to litigate. Graham v. Railroad Co., 102 U. S. 148.

Digitized by Google

During the performance of this contract by Kneeland, many disagreements arose between him and the company touching his performance of the contract. In June, 1891, a compromise and settlement of all differences was agreed upon, which was assented to by both the company and the committee of the bondholders of the old Narrow-Gauge Company. By that agreement Kneeland acknowledged his indebtedness to the company in a large sum, and his obligation to pay some $600,000 of underlying liens, which are still unpaid. The railroad company and the bondholders' committee agreed that the trustees, Ingersoll and White, should deliver to him the bonds and stock remaining in their hands, to be held to secure his notes executed on the consideration before stated. They also solemnly acknowledged that all the bonds and stock theretofore delivered to Kneeland by the trustees had been lawfully and properly delivered, and discharged the trustees from all responsibility therefor. It is clear from this action of the corporation and those representing the old bondholders that neither the stockholders who consented to this settlement nor subsequent creditors may, at this late day, open up any mere question of breach of contract, and thereby affect bonds which had been theretofore delivered.

This question of the value of the contract with Kneeland is an aspect of the case to which neither the pleadings nor the evidence was addressed, and upon which the court is without the assistance of counsel. For this reason we are unable to compare the value of the work and equipment done or furnished with that agreed to be done or supplied. There are, however, certain items about which we are not left in doubt. Kneeland contracted to discharge all claims against the old Narrow-Gauge Company which should be entitled to a preference over the first mortgage bonds. These claims, including receiver's debts, etc., were, at the date of the contract, estimated at $1,500,000. He might have that full sum to pay, or he might, by litigation, reduce the amount. He reserved the right to contest such claims at his own expense, and did succeed in cutting them down to about $1,100,000. Here was a margin of $400,000. How are we to estimate the price at which the company contracted to sell these bonds, unless we make allowance for a hazard like this? But it turned out that Kneeland in fact paid but $650,247 on these preferential claims, leaving unpaid about $500,000. Judge Taft allowed only the amount actually paid in estimating what the company had received. This was an error to the extent of the difference between the sum paid and the amount Kneeland is under contract to pay. If he fails to carry out his contract, he is liable, and this is an asset of the company. If he is insolvent, it is a misfortune which should not operate to make a sale illegal, which, when made, was legal, as being under a contract which, if carried out, would have realized the statutory price. One other item will serve to illustrate the difference between the value of Kneeland's contract and the value of that which was actually done under it. He agreed to pay the interest upon the bonds during the period of construction. He did pay such interest for the company to the extent of $1,766,465, and this is credited to him as a benefit received by the company. The same con-

Digitized by Google

tract provided that the net earnings of the railroad while under reconstruction should go to the company, and be applied to betterments. This was the contract under which the bonds were sold to Kneeland. It was made January 23, 1886. It was adopted or became binding upon the new corporation June 19, 1886. It was unchanged until September 14, 1887, when, by agreement, it was so modified as to permit Kneeland to apply the net earnings to payment of interest, he agreeing to supply any deficiency. Under this modification Kneeland stands charged with $1,020,314, being amount of net earnings received by him and applied to paying interest on bonds which he was originally obligated to pay out of his own means. The contract on this one fact was worth something over $1,000,000 more to the company than it actually benefited therefrom. Is this subsequent arrangement by which the railroad company turned over to Kneeland $1,000,000 of the net earnings of the company to have the effect of reducing the price for which the bonds were sold, and thus render their sale illegal? If it is to have any effect, it must be limited to such bonds as were delivered after September 14, 1887. In the circuit court's calculation of benefits received nothing was included for expenses of litigation conducted by Kneeland, nor for salary and compensation of the trustees who held the bonds and stock during pendency of reconstruction, nor for salary and expenses of the bondholders' committee, all of which Kneeland paid under the contract. These should have been included in the price received. They aggregated more than $50,000, and constituted a part of the price he was to pay for the bonds. In no view which can be reasonably taken is there shown any violation of section 3290, Rev. St. Ohio.

5. The next contention is that a majority of the bonds are void under section 3313, Id., which provides as follows:

"All capital stock, bonds, notes or other securities of a company purchased of a company by a director thereof, either directly or indirectly, for less than the par value thereof, shall be null and void."

The contention is that J. M. Quigley, who was a director and president of the consolidated railroad company, was the secret partner of S. H. Kneeland in the contract of January 23, 1886, heretofore in substance stated, and therefore a joint purchaser with Kneeland of the mortgage bonds of the company at less than par. To support this averment, Kneeland produces a copy of an agreement between himself and J. M. Quigley, and testifies that this agreement was but the written embodiment of a parol agreement which had existed between himself and Quigley prior to the date of the agreement of January 23, 1886. This contract is dated July 8, 1886, and was at that date signed and deposited, as a secret arrangement, with Robert G. Ingersoll, the private attorney of Kneeland, and his representative as one of the trustees to whom the railroad bonds had been delivered in escrow for delivery to Kneeland as his contract was performed. That agreement was in these words:

"Memorandum of agreement between Sylvester H. Kneeland, of the first part, and James M. Quigley, of the second part. Whereas, the party of the first part, on the 23d of January, 1886, made certain contracts for the reconstruction, widening of the gauge, and equipping of the line of railroad from

Digitized by Google

Toledo to East St. Louis, now known as the Toledo, St. Louis & Kansas City R. R. Co., said contracts having been made with the first mortgage bondholders' committee or the trustees, respectively, of the lines of road heretofore known as the Toledo & St. Louis Divisions of the Toledo, Cincinnati & St. Louis R. R. Co., contracts of like character and tenor having been since made with the Toledo, Charleston & St. Louis R. R. Co., the Bluffton, Kokomo & Southwestern R. R. Co., and the Toledo, Dupont & Western R. R. Co., being the companies forming by consolidation the Toledo, St. Louis & Kansas City R. R. Co., before mentioned; and whereas, the party of the first part, owing to the complicated and hazardous character of the contracts above referred to, having been unable to associate with himself therein such persons as he desired and anticipated, and now finds himself alone, and in danger of failing to accomplish all he has undertaken, and for these reasons, and to better carry out the great work in hand, finds it necessary to avail himself of the extended acquaintance and great knowledge and experience possessed with respect to the railroad property by the party of the second part: Now, therefore, in consideration of the premises, and other valuable and sufficient consideration, hereto him moving, the party of the first part hereby associates with himself the party of the second part as full partner equally in all the contracts above mentioned. Any profit to be made thereby to be equally divided; that is to say, each to be entitled to one-half of such profits. And the party of the first part declares he has no associates or partner in such contracts but the party of the second part. It is agreed between the parties hereto that their respective duties shall be as follows: The party of the first part to have charge of the reconstruction and financial arrangements therefor, and negotiations looking to alliances with other companies. The party of the second part to attend to the closing up of the trust created under a certain trust deed or agreement dated April 9, 1884, to conduct and have charge of the various litigations and references involving the purchase-money fund in court, conflicting title, and all lawsuits pertaining to the line of said Toledo, St. Louis & Kansas City R. R. Co., and to manage the business, other than financial, of the railroad company. If, owing to illness, or any other cause, the party of the second part should be unable to perform his duties as above, there is to be deducted from his share of the profits, before a final division, the amount required to pay the persons other than legal counsel who may be employed to take his place and do his work. The party of the first part in his department to be without restriction, except that he shall not close any negotiations tending to reduce the interest or profits of the party of the second part without the consent of the party of the second part. Any profits in securities or money withdrawn before the completion of the contracts shall be divided equally at the time."

So far as it appears, this corrupt agreement was known only to the parties thereto, and to the depository thereof. The relation thus established continued until September 8, 1887, when it was dissolved by mutual consent, and the signed agreement destroyed. A partial settlement of the profits seems to have been at that time agreed upon, and on July 5, 1889, Quigley received from Kneeland 180 of the bonds of the railroad company in compromise of his claims against Kneeland under this most infamous contract. The evil and vicious character of this arrangement by which Quigley was to become interested with Kneeland in the profits to be realized under this contract is at once seen when we recall that Quigley was not only the chairman of the bondholders' committee, which was the other party to the contract, but the president of the consolidated railroad company, which by the act of consolidation had assumed or adopted the contract made in anticipation of its organization. The object in uniting Quigley with himself was plainly to facilitate the acceptance of the work he was doing in the reconstruction of the railroad through Quigley's influence with his fellow directors, and more directly through his influ-

Digitized by Google

ence with Isaac W. White, the representative of the old bondholders' committee and of the new railroad company. This influence Kneeland says was supreme with White; the latter being, as he says, a mere "office boy" under Quigley. Between June 19, 1886, and September 7, 1887, bonds aggregating $4,550,000 were delivered by Ingersoll and White, trustees, to Kneeland, under the terms of the contract of January 23, 1886; and the contention is that all of these bonds so delivered prior to September 8, 1887, when the relationship between Kneeland and Quigley was dissolved, were bonds sold by the railroad company "directly or indirectly" to Quigley, who was a director of the company, for less than par, and are therefore "null and void," under section 3313, Rev. St. Ohio.

The first question is whether Quigley was associated with Kneeland when the contract of January 23, 1887, became obligatory upon the consolidated company. The constituent companies composing that company accepted the title to the railroad from Kneeland subject to the conditions of his agreement of January 23, 1886, and either expressly or impliedly assumed the obligations of that agreement. The same may be said as to the consequences which resulted from the consolidation of the constituent companies. The burdens, obligations, and contracts of the constituent companies were imposed upon the consolidated company as a consequence of the act of consolidation, and without any formal adoption of such contracts by the officers and directors of the consolidated company. Section 3384, Rev. St. Ohio; Compton v. Railway Co., 45 Ohio St. 592, 16 N. E. 110, and 18 N. E. 380; Railway Co. v. Ham, 114 U. S. 595, 5 Sup. Ct. 1081. That which was done after consolidation was in mere execution of the agreement imposed by law upon the consolidated company as a consequence of consolidation. The date, therefore, of the assumption of the contract of January 23, 1886, by the railroad company, was June 19, 1886. At that date was Quigley a joint contractor with Kneeland, or otherwise directly interested in the agreement then assumed by the company of which he on the same day became a director and president? For the purpose of carrying this contract of July 8, 1886, back of the date of the organization of the consolidated company, Kneeland has testified that prior to the contract of January 23, 1886, he had a verbal agreement with Quigley that, if he obtained an agreement for the reorganization and reconstruction of the old narrow-gauge railroad, he (Quigley) was to have one-half the profits of the venture, and that that agreement was not put in writing until the paper of July 8, 1886, was prepared and signed. Quigley denies this, and says he had no other agreement with Kneeland prior to July 8, 1886, than an agreement that he would represent him in the matter of defending claims against the old company involving liens prior to the mortgage, and that Kneeland was to compensate him for this attention. He says he did devote himself to this duty, and after a time found some disagreement as to the value of his services, growing out of differences of opinion as to the profitableness of the Kneeland contract, and that Kneeland finally proposed to give him one-half of his net profits for his services in the matter of underlying liens. We have given attentive consideration to the evi-

Digitized by Google

dence of Robert G. Ingersoll, but fail to find anything in it which is inconsistent with this statement of Quigley. The actual date when this corrupt agreement was originally made is of the utmost importance, and upon this point Mr. Ingersoll's memory is utterly valueless, and nothing detailed by him as to conversations with Quigley is in any way inconsistent with the statement of Quigley that this agreement under which he acquired an interest in the profits of Kneeland's contract with the railroad company was made July 8, 1886, being the date of the contract signed by him. The contract itself contains internal evidence that Kneeland had had no associate, and had not contemplated theretofore an association with Quigley. Between Kneeland and Quigley, we should prefer to accept the statement of the latter. He at least has not voluntarily exhibited himself as a party to this disgraceful and corrupt bargain. The circumstances also tend to confirm Quigley's account of the matter, and we concur with confidence in the conclusion reached by the trial court that this contract of July 8, 1886, bears the true date of the agreement, and that the effort to carry this corrupt arrangement back to the contract of January 23, 1886, has been unsuccessful. Kneeland was not a director of the company, and it was perfectly legitimate for it to sell to him its bonds and stock at any satisfactory price, provided only that the provisions of section 3290 were not violated. Kneeland was the only party known to the railroad company at any time, and was the only party with whom it had any contractual relations. Under a perfectly valid agreement, all of the bonds of the company were delivered to Ingersoll and White as trustees, to be delivered as the contract with Kneeland should be performed. This was the contract and the status of these bonds when Quigley bargained with Kneeland for an interest in the profits of the contract. However vicious and corrupt this agreement was, in view of Quigley's duty as a director to protect his company against the improper claims of Kneeland, it was not a purchase of bonds by Quigley from the railroad company. Whatever title or interest he acquired in such bonds, he acquired through and under Kneeland. When the company assumed this agreement (whether it did so as matter of law or by formal adoption is of no moment here), and placed the bonds in the custody and control of the trustees, to be delivered as Kneeland's contract was performed, it parted with them, and could make no other disposition of them, unless its title should be recovered through failure of Kneeland to perform his agreement. Kneeland might have sold them to whomsoever he pleased, and at any price he saw fit. The prohibitions of the statute apply only to original sales made by the company. Kneeland might sell to a director as well as to a stranger. The indirect purchase by a director, prohibited by the statute, is a purchase for a director by another, or by a director in the name of another. It cannot be said that Quigley indirectly purchased bonds from the company by obtaining them from Kneeland, either by a purchase out and out, or by a contract for participation in his profits. Certain of the bonds delivered to Kneeland were subscribed for by Havemeyer, Herbeck, Quigley, Stout, and Brown, when directors. This was done under an agreement with Kneeland

Digitized by Google

by which he agreed to let the old narrow-gauge bondholders have an equal amount of the new bonds and common stock for the par value of the bonds in cash. This subscription to these bonds was made after the first 2,000 bonds had been actually delivered to Kneeland. This was not a purchase from the company, but a purchase from Kneeland. But Kneeland says this privilege of subscription was really a part of his agreement of January 23, 1886. This is so only in a modified sense. It was wholly collateral to his contract, and seems to have been a personal verbal concession made by him to induce the old mortgage bondholders to consent to change the original plan for the reorganization of the old railroad, under which they were to receive second mortgage bonds of the proposed new company for their old bonds, and accept preferred stock instead. To induce them to accept this change, he agreed that he would, at their option, sell them an amount of his first mortgage bonds equal to their old bonds and the same amount of his common stock, for cash, at the par of the bonds. This was a purely personal and collateral arrangement between Kneeland and the beneficial owners of the old railroad, and was no part of the obligation assumed or adopted by the consolidated company. Those to whom the privilege was extended were not obligated to take bonds from him, and did not avail themselves of the option until after Kneeland had become the actual owner of the bonds. Upon the facts of the case, we agree with the conclusion of the circuit court that none of the bonds were sold in violation of section 3313, Rev. St. Ohio.

But we also affirm the decree upon this point upon another ground; that is, that none of the appellants were entitled to challenge the validity of the mortgage bonds. The railroad company made no such issue. Its answer was a formal traverse of the formal averments of the bill, and made no question as to the validity of the bonds under section 3313, Rev. St. Ohio, issued by it, and secured under the mortgage sought to be foreclosed. This defense has been made only under issues presented either by the answers or intervening petitions of general and unsecured subsequent creditors of the railroad company. May such creditors rely upon section 3313 as a defense against the enforcement of a mortgage and mortgage debt existing when they became creditors, and of which they had notice through registration? Are bonds sold by an Ohio railroad company at less than par to a director so absolutely null and void that any subsequent creditor may interpose the defense and destroy the obligation, even in the hands of an innocent holder for value? Are they so absolutely void that neither the company nor its stockholders can waive the objection or validate them by subsequent ratification or long acquiescence? The construction contended for by counsel for appellants is that the bonds are void to all intents, and in the hands of every holder, and that the defense to them may be made by any creditor of the company. The question has never been before the supreme court of Ohio, and is therefore one for original and independent opinion. The same question was made in the case of Zabriskie v. Railroad Co., 23 How. 381–399, but was not decided. The statute declares all bonds sold in violation of the statute to be "null and void." But nothing is better

Digitized by Google

understood than that the word "void" is more frequently than otherwise used in the sense of "voidable," both in contracts and statutes. Thus, in leases, contracts of insurance, and contracts of sale, the word "void" is almost universally construed as meaning voidable at the option of one of the parties, and therefore capable of being waived and enforced over the objection of the other. The cases illustrating this are innumerable. The same interpretation is often given to the words "null and void," when found in statutes. The statute provides that all bonds sold by the corporation to a director at less than par shall be "null and void." If we are compelled to construe the word "void" in its literal sense, there is an end to the argument. That which is void is incapable of enforcement, and cannot be ratified or confirmed. In this sense, an act of a corporation wholly beyond the corporate powers is void and incapable of confirmation or enforcement. Iron Co. v. Riche, L. R. 7 H. L. 653; Thomas v. Railroad Co., 101 U. S. 83; Central Transp. Co. v. Pullman's Palace-Car Co., 139 U. S. 24–59, 11 Sup. Ct. 478; Trust Co. v. Boynton, 37 U. S. App. 602, 19 C. C. A. 118, and 71 Fed. 797.

In Anderson v. Roberts, 18 Johns. 529, Spencer, C. J., in differentiating void and voidable acts, said:

> "Whenever the act done takes effect as to some purposes, and is void as to persons who have an interest in impeaching it, that act is not a nullity, and therefore, in a legal sense, is not utterly void, but merely voidable. Another test of a void act or deed is that every stranger may take advantage of it, but not of a voidable one."

This distinction is one recognized by the Ohio court in Terrill v. Auchauer, 14 Ohio St. 80–88.

It appears to us that there is good reason for refusing to give to the words "null and void," in section 3313, any narrow or rigorous construction, and good reason for interpreting them as used in the sense of "voidable." The reasons for this construction are found in the object of the statute. The object was not to compel the sale of all such corporate securities at par. There is no statute in Ohio prohibiting a corporation from disposing of its capital stock at its fair market value, except to a director. Neither is there any policy to be discovered from the statute of that state regulating the organization of railroad corporations from which we might infer a purpose to compel sales of corporate stock at par only. Neither do we find any statute which forbids generally the sale of railroad bonds at less than par. Upon the contrary, section 3290 declares sales at any price not less than 75 per cent. of par value to be valid and regular, and does not in terms declare sales at less than that price as operating to destroy bonds so sold. Neither does this section 3313, nor any other Ohio statute, prohibit sales of either corporate stocks or bonds to directors. The plain and obvious object was to protect such corporations from improvident or fraudulent sales of such securities by directors to directors by requiring that such sales shall be for not less than par. The statute affects only the personal capacity of the directors to buy bonds from the corporation at less than par. No public policy is declared upon the face of the statute, and none is discoverable from the evident object and purpose of the law. By section 3290, the state

Digitized by Google

consents that sales of bonds shall be valid and effectual if made at any price equal to, or in excess of, 75 per cent. of par. If we assume that that statute is based upon some principle of public policy looking to the interest of the public who may become creditors of the company, then the public policy of Ohio and the interests of future creditors are protected by requiring that all bonds shall be sold at not less than 75 cents on the dollar. Whether bonds are sold to a stranger, a stockholder, or a director at 75 cents, or at any sum above that and below par, does not affect any public policy which may be indicated by section 3290. It follows, therefore, that if directors are not permitted to buy bonds at 75 cents, as all the rest of the public may, the prohibition is intended to protect the corporation against sales by those who represent the corporators to themselves, and that the public have no concern, except so far as the public interest may be regarded as protected by section 3290. We are therefore led to construe the statute as one intended only for the benefit of railroad corporations and their stockholders. Such a statute serves its purpose when construed as making sales in violation thereof voidable at the instance of the corporation for whose benefit it was enacted, whether the latter be put in motion by its proper officers, or by stockholders when the corporate management refuses to act. The rule deducible from the decided cases is this: Where the enactment is not based upon some declared or evident ground of public policy, but has for its object the protection of persons sui juris, the word "void" will generally be construed as "voidable" only at the election of the persons for whose benefit the enactment was passed. In Ohio this rule of interpretation was applied in Terrill v. Auchauer, 14 Ohio St. 80, where a statute which declared that a purchase at a judicial sale by one who acted as an appraiser of the property should be "considered fraudulent and void" was construed as making such a purchase voidable only on interposition of a party in interest directly for the purpose of avoiding it. The Ohio court, in the case cited above, after considering the object of the statute under consideration, said:

"It would seem that we ought to construe the word 'void,' in this statute, as meaning 'voidable' only, if we can find any established rule by which to distinguish cases in which it has been and ought to be so construed from those in which a literal construction has been adopted, and to hold that this case comes within the former category. Such a rule, we think, is found in the following language of Bayley, J., in Rex v. Inhabitants of Hipswell, 8 Barn. & C. 471, where, discussing a question of statutory construction, he says: 'But it is said that "void" is sometimes construed "voidable," and, where the provision is introduced for the benefit of the parties only, such a construction may be right, but where it is introduced for public purposes, and to protect those who are incapable of protecting themselves, it should receive its full force and effect.' Tested by this rule, the word 'void,' in the statute under consideration, may be held to mean 'voidable' only, for this provision of the statute was obviously introduced only for the benefit of parties to be affected by the sale. The public at large have no interest in the matter, and the parties in interest have full opportunity to protect themselves by interposing to prevent the confirmation of a sale, or moving to set it aside, or, in a proper case, by a direct proceeding to avoid it after the conveyance is made. A rule substantially similar is stated by Lord Denman in Pearse v. Morrice, 2 Adol. & E. 94, in these words: 'The word "void" had certainly been construed as "voidable" in some instances, where the proviso was introduced in favor of the party who did not wish to avoid the instrument.'"

Digitized by Google

In Bank v. Portner, 46 Ohio St. 381–384, 21 N. E. 634, the court held that the indorsee of a check could not recover against the drawer, although he took same for value and without notice of any vice in the transaction, because of the provisions of section 4269, Rev. St. Ohio, declaring all notes, bills, bonds, and contracts, when given for money won or lost upon any game, to be "absolutely void and of no effect." But the Ohio court clearly distinguished the principle upon which it proceeded in that case from the principle to be followed where the statute using the word "void" is not one enacted for the purpose of advancing some public policy, by saying:

"Notwithstanding the general tendency of courts to construe the word 'void' as 'voidable' only, when used in statutes that affect contracts made in disregard of their provisions, yet where a public policy is to be subserved, as the suppression of usury or gaming, the settled rule is to give to the language employed its full force and effect. The rule with its limitations is thus stated by a very reliable author on the interpretation of statutes: 'In general, however, it would seem that, where the enactment has relation only to the benefit of particular persons, the word "void" would be understood as "voidable" only, at the election of the persons for whose protection the enactment was made, and who are capable of protecting themselves, but that when it relates to persons not capable of protecting themselves, or when it has some object of public policy in view which requires the strict construction, the word receives its natural full force and effect.' Maxw. Interp. St. (2d Ed.) 256."

Thus, a Massachusetts act declared all mortgages given to secure usurious obligations "utterly void." The supreme court of Massachusetts interpreted the purpose of the act to be the protection of mortgage debtors against usurious demands, and held the words "utterly void" as meaning "voidable" at the instance of the debtor, and that strangers to the title should not be at liberty to raise the question. Green v. Kemp, 13 Mass. 515. In Michigan a statute provided that no mortgage or sale "of any part of the mine works, real estate or franchises of any corporation" mentioned in the first section of the act "shall have any force or effect, or pass any title thereto, or interest therein, unless expressly authorized by the vote of three-fifths in interest of the entire stock of said company actually present, or legally represented, at some meeting called and notified" as required by law. A mortgage was sought to be foreclosed, and was resisted by an assignee of the equity of redemption, which had been sold at execution sale, upon the ground that the mortgage had not been authorized as required by the statute, and was void by express provision of the statute. The opinion of the court was by Cooley, J., who, in a clear and well-considered opinion, held that the defense could only be made by the corporators. The statute in question was construed as intended only to protect stockholders in mining companies, and upon this ground held to render a conveyance made contrary to its provisions voidable only, at the election of those for whose benefit the statute was passed.

This provision of the Ohio statute does not limit the scope of the powers of the companies affected, but only prescribes regulations as to the manner of exercising the general powers of the corporation. If this regulation of the disposition of corporate securities be one intended only for the benefit of the corporation, it is a provision which the corporation and its stockholders might waive. Zabriskie v. Rail-

Digitized by Google

road Co., 23 How. 381–398; St. Louis, V. & T. H. R. Co. v. Terre Haute & I. R. Co., 145 U. S. 393–403, 12 Sup. Ct. 953; Louisville Trust Co. v. Louisville, N. A. & C. R. Co., 43 U. S. App. 550, 22 C. C. A. 378, and 75 Fed. 433, and decided by supreme court of the United States May 15, 1899 (not yet officially reported) 19 Sup. Ct. 817; Central Trust Co. v. Columbus, H. V. & T. Ry. Co., 87 Fed. 815–826.

A statute of Illinois prescribed that any lease by an Illinois railroad company without the written consent of the Illinois stockholders "shall be null and void." It was construed as a provision enacted for the benefit of the stockholders alone, and to be availed of by them only. St. Louis, V. & T. H. R. Co. v. Terre Haute & I. R. Co., 145 U. S. 393–403, 12 Sup. Ct. 953.

The conclusion we reach is that subsequent creditors cannot avail themselves of a defense which the corporation has not made, and which was available only to the corporation. If the corporation chooses to acquiesce, a creditor who became such afterwards will not be heard to impeach the transaction. This is well settled in respect to a fraud practiced upon a debtor. If the debtor waives the right to impeach the transaction, or elects to abide by it, a creditor subsequent to the fact will not be suffered to inquire into or question it. Graham v. Railroad Co., 102 U. S. 148; Porter v. Steel Co., 120 U. S. 673, 7 Sup. Ct. 1206. So, where a transaction is within the general scope of the powers of the company, but is in violation of some limitation of law upon the exercise of the power, it cannot be challenged by those who subsequently become creditors. Sioux City Terminal Railroad & Warehouse Co. v. Trust Co., 27 C. C. A. 73, 82 Fed. 124–133; Central Trust Co. v. Columbus, H. V. & T. Ry. Co., 87 Fed. 815–828; Bank v. Whitney, 103 U. S. 99–103.

The corporation having made no issue, and having chosen to acquiesce in the purchase of the bonds averred to have been sold to directors, the defense is not available to subsequent creditors. The consequences to innocent holders of securities, such as Ohio railroad bonds, would be most appalling and unjust if the provision in question should be construed as making such bonds void to all intents, and upon the challenge of any subsequent creditor, for a secret vice growing out of their original disposition by the corporation. So harsh and unjust a construction is not necessary, and would be unjustifiable, in view of the object of the enactment. A construction which casts upon innocent holders of such bonds all the consequences of a violation of the statute, and suffers the corporation to retain the benefits of such a violation of law, and the original purchasers to escape responsibility, would bring about most deplorable results. The issuance and sale of bonds and stocks were within the general scope of the powers of the corporation. Their sale at less than par to a director was a mere violation of the provision regulating the exercise of that power. This regulation, being for the benefit of the corporation, is only available to the corporation while the bonds are in the hands of those who took them in violation of the law, or with notice that they had been purchased in violation of law. It is a defense not open to strangers, nor to those who became creditors after the execu-

Digitized by Google

tion of the contract. Upon this ground, as well as upon the ground that the evidence fails to show a violation of law by a sale to directors at less than par by the corporation, we affirm the decree of the circuit court holding that all the bonds are legal and valid obligations of the corporation.

6. The circuit court did not err in holding that the preferred stockholders were entitled to a preference over the common stockholders in the distribution of the property of the corporation after the payment of debts. The form of these certificates of preferred stock has been heretofore set out. The contention of the common stockholders of the company is that the words contained in the foregoing certificate, "this stock constitutes a lien upon the property," were inserted without authority of the corporation, and by the president, or some one acting for him, in the printing of the certificates, and that they were not authorized by the contract with Kneeland of January 23, 1886, nor by the resolutions of the board of directors. The evidence fails to establish the contention that this language was inserted fraudulently. The form of the certificate was left by the directors to Kneeland, who represented this common stock, and to Quigley, and the bondholders' committee, who represented those who were to receive the greater part of the preferred shares. There was much conference between Kneeland and the bondholders' committee, and more than one form was suggested and considered. The evidence as to the verbiage thus suggested and finally adopted is altogether unsatisfactory. The certificates in the form they now appear were issued in November, 1886, and the stock was shortly thereafter listed upon the New York Stock Exchange, at the request of the directors of the railroad company, and with the consent and knowledge of Kneeland, and have gone into general circulation without objection or protest until the question was made in this litigation. These facts strongly tend to establish that the form of the certificate was as agreed upon by Kneeland and Quigley, and the others composing the committee to whom that matter was referred. Whether the agreement of January 23, 1886, or the subsequent resolutions of the consolidated company, expressly authorized that the preferred stock should be preferred in respect to both the property and net earnings of the corporation, or whether either the contract or resolutions authorized the form in which such certificates were issued, the fact remains that the certificates were issued in the form they now appear, with the knowledge and sanction of Kneeland, who, in October, 1886, received 2,310 shares of this preferred stock, and admits that he then noticed both the lien clause in question, as well as the clause prohibiting any mortgage without the consent of the preferred stockholders. The stock ledger shows Kneeland to have been the holder of the whole block of common stock from June 19, 1886, until November 24, 1886, when he turned it over to Ingersoll and White, the trustees under the construction contract, who again delivered it to him, from time to time, in blocks, in payments under the construction agreement, and none passed to outsiders until November 24, 1886, when a delivery was made to him by the trustees, a part thereof being transferred on the same day by him to others. Thus Kneeland,

Digitized by Google

while the sole holder of every share of common stock, received preferred shares from the company in the form they now appear. These he retained, without taking any step to correct the form of contract therein set out by which such stock was given a preference in the distribution of the property of the corporation over the common stock, all of which was owned by him. Three years later he received 5,000 other shares of the same preferred stock, without objection or protest. At that time he still owned a large majority of the common shares; and, while his receipt of preferred shares at that time could not affect others who had become owners of common stock theretofore by assignment from him, it is a strong circumstance to indicate that he had theretofore ratified and consented to the preference given the preferred shares over the common shares at a time when he was the sole representative of the common stock. A delay of more than 10 years in questioning the authority of the preference clause is in itself sufficient to raise a presumption of ratification. If the common stockholders had the right originally to have this lien clause stricken out, so far as it applies to the property of the company, they have lost that right, under the circumstances of this case, by their acquiescence and inexcusable delay. It is true that this is not a question between creditors and the corporation, or stockholders and third parties. But it is a question between holders of common and holders of preferred stock. If the common stockholders had an equitable right to have the lien clause in question stricken out, and the contract declared illegal, they should have been prompt in their application to the corporation, or, if it obtained circulation before knowledge, then they should have been prompt in their application to the courts for relief. Mor. Priv. Corp. § 462; Banigan v. Bard, 134 U. S. 291, 10 Sup. Ct. 565; Kent v. Mining Co., 78 N. Y. 159–187, et seq.; Taylor v. Railroad Co., 13 Fed. 152. This they should have done, so that evil should not fall upon innocent parties who might buy such shares in reliance upon this clause. This they did not do, and only complained when the distribution of the company's property was about to occur. The evidence of acquiescence and ratification afforded by such inexcusable delay is an answer to the objection now made to the preference claimed, aside from all other questions we have considered. The objection that such a preference in the property of the company as is secured by this clause is illegal and unauthorized by law has been again pressed upon us. The same question arose in the case of Hamlin v. Trust Co., 47 U. S. App. 422, 24 C. C. A. 271, and 78 Fed. 664. The question was there most ably argued, and was decided upon full consideration. In that case we had under consideration the very preferred shares now in question. We said then that, "Ordinarily, preferred stock is entitled to no preference over common stock in relation to capital. But when there is an express agreement giving such a preference, not prohibited by local law nor the charter, we see no reason why it is not a valid contract, as between the corporation and such preferred stockholders, and binding upon the common stockholders." Such an agreement is nothing more than a contract between stockholders as to how they shall divide the corporate property and profits, and, if not prohibited, is

Digitized by Google

clearly within the general powers of such corporators. It is difficult to see how such an arrangement is of the slightest consequence to the public, or to creditors of the corporation. It does not withdraw the property from the demands of creditors, and provides only for the division among those who are the beneficial owners of the corporate property, after the payment of corporate obligations. We see no reason for doubting the correctness of the view we took in the Hamlin appeal of the legality of such an agreement for preference, nor of the proper construction and intent of the words employed to give the preference complained of. Mor. Priv. Corp. § 461; Gordon's Ex'rs v. Railroad Co., 78 Va. 501; In re Bangor & P. M. Slate & Slab Co., L. R. 20 Eq. 59; McGregor v. Insurance Co., 33 N. J. Eq. 181.

7. The original decree of foreclosure denied to the preferred stockholders the right to use their stock in the payment of any bid made by them for the railroad property when exposed for sale under the foreclosure decree therein ordered. The ground for this denial, as stated by Judge Taft in his opinion, was as follows:

"Such a clause in a decree is, in effect, a distribution of the assets of the company among the stockholders, and would necessarily work to the prejudice of those creditors whose claims are not to be paid under the decree for sale. Are there not or may there not be such creditors? In the foreclosure proceeding, only judgment creditors are parties. Such a provision in a foreclosure decree would utterly ignore the rights of creditors whose claims are not reduced to judgment. Nor does the creditors' bill necessarily include all creditors of the company. The advertisement for creditors of the company under the creditors' bill only invited, and only could invite, those to come in who wished to participate in the distribution of the proceeds of the sale between creditors; but it did not advise them that the surplus, if any, after sale of the property and payment of claims of those who made themselves parties, was to be divided among the stockholders. Those creditors who have chosen not to come in have the right to rely on this court's paying over the surplus to the company, to whom they can look for payment. Their failure to come in under the creditors' bill, which is a proceeding quasi in rem, only excludes them from any claim against the property, but it does not bar their claims against the company on a winding up, and for a distribution of the surplus realized by the company on the sale of the property under the creditors' bill. For this reason the application of the preferred stockholders for leave to use preferred stock to complete their bid must be denied."

Subsequently, upon application, he permitted a modification of the decree, and allowed such preferred shares to be used to complete any bid by such stockholders, under the conditions following:

"Upon application made by and on behalf of the cross complainants Hannibal E. Hamlin and others for a modification of the decree for foreclosure, entered April 1, 1898, the court grants the application by adding, at the foot of said decree, the following: Upon the issue arising between the cross bill of said Hamlin and others, and the answer to said cross bill of the defendant the Toledo, St. Louis & Kansas City Railroad Company, and the answer of S. H. Kneeland, for himself and other common stockholders, the court finds that said cross complainants and others as holders of the preferred stock in said Toledo, St. Louis & Kansas City Railroad Company have, by virtue of the terms under which said stock was issued, a priority over said common stockholders, not only in the payment of dividends, but also in the distribution of the assets, remaining after the payment of all the debts of said company, secured or otherwise, when the same may come on to be distributed, and therefore that, if said preferred stockholders or any of them choose to do so, they may deposit, in partial fulfillment of any bid which they may make at the sale ordered herein, shares of the preferred stock of said railroad com-

Digitized by Google

pany; provided, however, that such stock shall not be received for this purpose until the holders thereof shall have paid into the registry of the court a sum upon their bid in cash sufficient to satisfy all the costs and expenses of this suit and sale, all the receiver's debts, all the mortgage debt, and all the debts, claims for which have been filed either in this foreclosure proceeding, or under the creditors' bill consolidated herewith, with interest thereon to the day of distribution, as said debts have been or shall be hereafter adjudicated either under the foreclosure bill or the creditors' bill herein; and provided, further, that said preferred stock thus deposited shall be received to pay only that part of the surplus of the bid after payment of debts of the railroad company which its owners would be entitled to receive on their shares of stock in the distribution of the surplus among the holders of the entire issue of said preferred stock, and the remainder of said surplus, to be paid in cash, shall be held for ratable distribution to the owners of the shares of the preferred stock not joining in the bid; and provided, further, that, as a condition of the privilege of using the preferred stock to complete their bid as above permitted, such preferred stockholders shall, if they become the purchasers of the said mortgaged railroad ordered sold, hold said road thus purchased subject to a lien equal in amount to the entire surplus remaining out of the purchase price bid after the payment of all the costs, expenses, receiver's debts, and debts of the company, mortgage or otherwise filed and adjudicated herein, to secure the payment of any debts of said Toledo, St. Louis & Kansas City Railroad Company which have not been presented under this bill or the creditors' bill herein, as the holders of said claims may present them and establish their validity; and the court reserves the right to retake the mortgaged property again into its possession, to enforce the payment of said debts as they are presented, until the said surplus shall have been exhausted."

Hamlin and others, representing the preferred stockholders, have appealed only from so much of said decree as subjects the property, if bought by them, to a lien "to secure the payment of any debts of said Toledo, St. Louis & Kansas City Railroad Company which had not been presented under this bill or the creditors' bill herein, as the holders of said claims may present them and establish their validity; and the court reserves the right to retake the mortgaged property again into its possession, to enforce the payment of said debts as they are presented, until the said surplus shall have been exhausted." The objection is urged that this decree will operate to leave the interest acquired by the preferred stockholders through the use of their stock in payment of their bid perpetually subject to a lien for an indefinite amount in favor of creditors who refuse to come forward and prove their claims in the creditors' suit, and subject also to new claims arising under obligations incurred by the railroad company which will be exclusively under the control of those owning the common stock. On the other hand, it is said that the duty of the court is to pay over any surplus, after paying the debts established in the administrative suit, to the officers and directors of the railroad company, whose duty it will be to hold same subject to the claims of creditors, and of stockholders, upon a legal dissolution of the corporation. The circuit court did not entirely recognize the contention of either the corporation or the preferred stockholders; for it refused to permit the corporation to receive the surplus, and allowed its appropriation by the preferred stockholders, subject to a lien in behalf of creditors of the corporation, if any should establish their debts who had not come into the creditors' suit. That the corporation is not technically dissolved as a consequence of the sale of its property and franchises may be conceded. The mortgage included the franchises of the corporation,

Digitized by Google

and the decree of foreclosure includes the entire railroad and the franchises of the corporation. If, after providing for every debt which may be established under the administrative suit, there shall be a surplus, what shall be done with it? The situation is peculiar. The preferred stockholders, under the terms of their subscription, are entitled to obtain a return of their capital before the common stockholders are repaid. There will be no known debt remaining unpaid. There may be debts, however, not proven under the suit instituted for the purpose of ascertaining and paying all debts, and the shell of the corporation may continue a moribund existence, with the right to sue and be sued as a corporation. Are the principles of equity so inflexible that, under such circumstances, the court will not feel authorized to distribute this surplus, lest thereby unknown creditors may be prejudiced, or the technical rights of the corporators be violated? If the court was authorized by statute to decree a dissolution of the corporation, it would undoubtedly direct a distribution among stockholders, after ascertaining that no debts remained unpaid. This power to adjudge a technical dissolution the court has not. What, then, may it do? Here is a fund for which creditors do not apply, and which, in default of creditors, will belong to stockholders. But the equity in favor of a distribution by the court is strengthened by the fact that the preferred stockholders are entitled to a preference in the distribution of capital over common stockholders, and object to having that surplus paid over to the corporation, which is exclusively in the hands of the common stockholders, the preferred stockholders having no vote in the management of corporate affairs. The difficulty arising out of the fact that a technical dissolution of the corporation has not occurred, and will not result from the sale of the corporate property, is, in our judgment, met by the fact that that which will result will amount to a de facto dissolution. The object and purpose for which the corporation was created were to own and operate its railroad. When that railroad and all other corporate property and the corporate franchise to own and operate its railroad shall have been sold and conveyed to the purchasers at foreclosure sale, that will forever put an end to the capacity of the corporation to do the only business for which it was created, and operate as a de facto dissolution of the corporation. Briggs v. Penniman, 8 Cow. 387; Slee v. Bloom, 19 Johns. 456; Bradt v. Benedict, 17 N. Y. 93–96; Sprague-Brimmer Mfg. Co. v. Murphy Furnishing Goods Co., 26 Fed. 572. Under such circumstances, a court of equity is justified in administering the assets of the corporation as if a legal dissolution had occurred. Under the creditors' bill and the cross bill of the preferred stockholders, through which they have asserted their preference in the capital over the common shareholders, the court may, after ascertaining that no debts remain unpaid, distribute the assets remaining among the stockholders according to the contract between them as determined in the foreclosure suit. If the surplus should be turned over to the directors of the moribund corporation, they would but hold it as trustees, and would be accountable to the preferred stockholders for its due administration. If they unreasonably retained such surplus, under pretense that debts might appear,

Digitized by Google

a court of equity would, on suit of the stockholders, ascertain the existence of debts, and compel distribution. This is practically what was done, under such circumstances, in the case of Cramer v. Bird, L. R. 6 Eq. 143–147. The bill was by a preferred stockholder in behalf of himself and others against the corporation and its directors, and its object was to compel the directors to account to the stockholders for a surplus of capital in their hands, and make distribution thereof. The corporation had sold and transferred the property which it had been organized to manage, and had ceased to do business. Lord Romilly, master of the rolls, said:

"The case may be stated thus, assuming for a moment that no act had been passed for the winding up of companies: An act is passed enabling certain persons to form a railway and a harbor, and they are constituted a corporation for making and maintaining that railway and harbor. By a second act their powers are extended. They are unable to carry on their works, and a third act is passed, reciting that their powers had become extinct, and authorizing the transfer of their undertaking to another company, which is accordingly effected, the property is sold, and, after providing for all the liabilities of their own company, the directors have a balance of several thousand pounds in hand. Can it be said that there is no remedy, and that they are entitled to keep this money for themselves? The proposition amounts to this: That, unless the act of parliament gives a remedy, there is none. I consider that they are trustees for the members of that body which was once a corporation, but which has become extinct, and that this court, making all due and just allowances to them, may call on the directors to pay the money, and divide it among the persons entitled, as though no winding-up act had ever passed. This case does not, in my opinion, come within the 199th section of the companies act of 1862, nor within the railways abandonment act of 1850 (13 & 14 Vict. c. 83), nor the railway companies act of 1867 (30 & 31 Vict. c. 127). None of these acts were intended to supersede the principles of equity, but only to assist the court, by giving additional powers, to enable persons to enforce equities, without those peculiar difficulties arising from the number of shareholders, and from the rules of equity, which theretofore had made it impossible for persons in such cases ever to get to a decree. I am of the opinion that there cannot be a plainer equity than this: that, where the functions of a corporation have ceased, the managers of that corporation are bound to account for all moneys belonging to the corporation, and, when such moneys are improperly retained, this court will make a decree, in order that they may be divided among the various members."

A note shows that a reference was made to ascertain what debts and liabilities of the company remained unsatisfied. The doctrine of this case was recognized in Re Suburban Hotel Co., 2 Ch. App. 737. That which the court might do upon a bill filed by stockholders against the directors of a corporation which has permanently ceased to do business, and has lost the power to carry out the purposes of its organization, it may do, under the pending creditors' bill, in connection with the pleadings and decrees affecting this corporation and its property in the foreclosure case. The court should, in the administrative case, exercise the jurisdiction arising out of the fact that a de facto dissolution has occurred, and on that basis ascertain, as in Cramer v. Bird, whether any debts and liabilities remained unpaid. For this purpose it will be proper for the circuit court to cause publication to be made, requiring all creditors to file their claims within a reasonable time, to be prescribed by the court, and to establish the same before the master. After providing for the payment of debts so ascertained, it will be the duty of the court, no

Digitized by Google

debt remaining unpaid, to declare a final distribution of the capital among the shareholders who, for this purpose, should file their certificates with the master. The decree of foreclosure will be so modified as to reserve a lien upon the railroad in the hands of the preferred stockholders, as purchasers, only for the payment of such debts of the Toledo, St. Louis & Kansas City Railroad Company as have or may be so established under the pending creditors' suit, and allowing such purchasers to intervene and contest all claims therein pending.

8. The petition, or so-called answer and cross bill, of Dana A. Rose, was properly dismissed. He was not a party, and had filed a verbose and belligerent pleading without leave of the court. Rose is a holder of preferred stock. The Hamlins, representing a majority of that stock, were suffered to become parties defendant to the foreclosure bill as representatives of the class. The facts and reasons permitting that intervention appear in the opinion of this court in the case of Hamlin v. Trust Co., 47 U. S. App. 422, 24 C. C. A. 271, and 78 Fed. 664. When Hamlin's appeal had resulted in his reinstatement as a party, the circuit court directed the master to make publication, directing all holders of preferred stock certificates like those set up in Hamlin's answer and cross bill to appear and become parties complainant to the representative cross bill filed by Hamlin and others. Rose was not content to have himself made a cross complainant with the Hamlins, as permitted by the order recited. Desiring to present his claim in his own way, and upon his own view of the facts, he declined the invitation extended, and filed a pleading which purported to be an answer to the foreclosure bill and cross bill. In this pleading he averred that the preference secured to holders of preferred stock in the property of the company was unauthorized and fraudulently inserted, but claimed the benefits of the lien, if held valid. He attacked the validity of the mortgage bonds, upon the grounds already considered in a former part of this opinion, and ended by attacking the validity of the preferred stock issued to Quigley. There was no authority for Rose's admission as a party, save as a co-complainant with Hamlin. He did not choose to avail himself of that privilege. He consequently was never a party to the suit, except in so far as he may be bound by a decree through representation by those having the same interest and admitted as representing the class. This gave him no independent status as a party. The right to file his stock and prove it up before the master, if he had such right at that stage of the case, with the rights incident to such an appearance, is a right of which he did not avail himself. Rose says he could not adopt the pleading filed by the Hamlins. The averments of his own pleading show that he was not one having a common interest with the body of preferred stockholders. If he wished to contest the validity of the lien claimed by such stockholders, or the validity of some of the certificates, the Hamlin suit afforded him no field and extended to him no invitation. He should have sought admission as an independent defendant. This he did not do, unless the unauthorized filing of his pleading be regarded as an application for leave to intervene. If so, it was denied him. From a decree refusing leave to intervene and become a party, no appeal lies. Ex

Digitized by Google

parte Cutting, 94 U. S. 14. We entertained Hamlin's appeal because, after being admitted as defendant, he was excluded upon the ground that his intervention was without merit. The decree would have concluded him in another suit. His remedy was by appeal. Not so with Rose. He was never admitted as a party. He had the right to come in as a co-complainant with Hamlin. That he did not do. His appeal must be dismissed. The decree of the circuit court involved by the appeal of the Toledo, St. Louis & Kansas City Railroad Company and those joined with it is affirmed. The appeal of Hamlin and others, from so much of the foreclosure decree as subjected the railroad, if purchased by the preferred shareholders, to a lien in behalf of creditors who should not establish their claims in the pending creditors' suit, is sustained, and the decree of foreclosure modified so as to limit such lien to such debts as shall be established in the administrative suit. The costs of the Hamlin appeal will be paid by the receiver.

NOTE.

Supplementary and Ancillary Proceedings and Relief in Federal Courts.[1]

1. In General.

[a] (U. S. C. C. Ind. 1868) The federal court will retain jurisdiction of an action, once acquired, to give remedy to all intervening and conflicting rights.—Barth v. Makeever, Fed. Cas. No. 1,069 [4 Biss. 206].

2. Citizenship of Parties.

[a] (U. S. C. C. A. 6th Circuit, 1895) In a dependent or ancillary suit in a federal court, a party may be brought in by compulsory process, though his citizenship is such that it would defeat the jurisdiction if it depended on diverse citizenship.—Compton v. Jesup, 15 C. C. A. 397, 68 Fed. 263.

[b] (U. C. C. C. Ark. 1868) The fact that the parties plaintiff and defendant to a cross bill, or some of them, are citizens of the same state, will not prevent its being sustained in the federal court, where necessary to prevent injustice; and defendants, as parties to the original bill, are subject to the jurisdiction of the court.—Schenck v. Peay, Fed. Cas. No. 12,450 [Woolw. 175].

[c] (U. S. C. C. Mass. 1878) Where a suit is auxiliary to one previously commenced and still pending between citizens of different states, it is no objection to the jurisdiction that the parties are citizens of the same state.—Stone v. Bishop, Fed. Cas. No. 13,482 [4 Cliff. 593].

3. Possession of Subject-Matter—Foreclosure and Insolvency Proceedings.

[a] (U. S. Sup. 1890) A federal court having jurisdiction and possession, through its receiver, of all the property of a railroad company, thereby acquires jurisdiction of a subsequent suit to foreclose a mortgage on the same property, irrespective of the citizenship of the parties thereto, and may enter therein a binding decree of foreclosure and sale.—Morgan's L. & T. R. & S. S. Co. v. Texas Cent. Ry. Co., 11 Sup. Ct. 61, 137 U. S. 171.

[b] (U. S. C. C. A. 6th Circuit, 1895) While property is held in the possession of a federal court, and thereby withdrawn from the jurisdiction of state courts, such federal court has jurisdiction to entertain a suit in relation to such property, without regard to the citizenship of parties.—Compton v. Jesup, 15 C. C. A. 397, 68 Fed. 263.

[c] (U. S. C. C. A. 5th Circuit, 1896) The possession by the court, in which a foreclosure suit is pending, of the fund applicable to the payment of the bonds secured by the mortgage under foreclosure, is sufficient to authorize it to enter-

---

[1] Ancillary jurisdiction as affected by citizenship of parties, see note to Shipp v. Williams, 10 C. C. A. 260.

Digitized by Google

tain the petition of the claimants, asserting a mortgage lien upon such bonds.—Trust Co. v. Carter, 24 C. C. A. 73, 78 Fed. 225.

[d] (U. S. C. C. A. 6th Circuit, 1897) The fact that the circuit court has possession of all the assets of an insolvent corporation, for the purpose of winding up its affairs, in a suit pending in such court, gives it jurisdiction to entertain a petition, ancillary to such suit, against a debtor of the corporation, to ascertain and enforce payment of his debt, without regard to the citizenship of the parties or the amount in controversy.—Peck v. Elliott, 24 C. C. A. 425, 79 Fed. 10.

[e] (U. S. C. C. Ga. 1894) When a United States circuit court has jurisdiction, generally, of a controversy, by reason of the parties being citizens of different states, it can entertain a suit for the foreclosure of a mortgage on land within the district for which it sits, and, in such suit, can entertain and determine such pertinent questions as are necessary to give the complainant perfect and full relief, including the question of the superiority of an alleged prior mortgage held by a defendant, although neither complainant nor all the defendants are residents of the district.—Kuhn v. Morrison, 75 Fed. 81.

[f] (U. S. C. C. Neb. 1896) A suit against a street-railway company to collect a paving tax assessed against it under its contract with the city cannot be removed into a federal court merely because the property of the company is in possession of that court in another suit for the foreclosure of a mortgage thereon.—City of Lincoln v. Lincoln St. Ry. Co., 77 Fed. 658.

[g] (U. S. C. C. N. Y. 1897) A federal court having possession, through its receiver, of the mortgaged property, has jurisdiction of a suit to foreclose the mortgage, regardless of the citizenship of the parties.—Fish v. Railroad Co., 79 Fed. 131.

[h] (U. S. C. C. Ohio, 1897) A federal court has ancillary jurisdiction of a mortgage foreclosure suit, irrespective of the citizenship of the parties, where all the property affected is already in its possession through its receiver in another suit.—Continental Trust Co. v. Toledo, St. L. & K. C. R. Co., 82 Fed. 642.

[i] (U. S. C. C. N. C. 1899) Where a federal court has taken possession of the property of an insolvent corporation for distribution among creditors, it may, in its discretion, remove to itself suits pending against the corporation in the state courts, and affecting the property, by virtue of its jurisdiction to administer the same and as incidental thereto, without regard to whether or not it would have had jurisdiction of the suit.—Rice v. Water Co., 91 Fed. 433.

4. Actions by and against Receivers.

[a] (U. S. Sup. 1895) The circuit court has jurisdiction in a general creditors' suit properly pending therein, for the collection and distribution of the assets of an insolvent corporation, to hear and determine an ancillary suit instituted in the same cause by its receiver, in accordance with its order, against debtors of such corporation, so far as in said suit the receiver claims the right to recover from any one debtor a sum not exceeding $2,000.—White v. Ewing, 15 Sup. Ct. 1018, 159 U. S. 36.

[b] (U. S. C. C. A. 6th Circuit, 1896) A federal court which has possession of property by receivers, and is engaged in administering the trusts pertaining to it, must take jurisdiction of any claim by any one whose interests would be injuriously affected by the action of the court in dealing with the property and administering the trust.—Blake v. Coal Co., 22 C. C. A. 430, 76 Fed. 624.

[c] (U. S. C. C. Wash. 1896) A suit in equity, brought by the receiver of an insolvent corporation, appointed by a federal court, against the subscribers to the stock of the corporation, to collect the balances due on their subscriptions, is within the jurisdiction of such federal court in equity, as an ancillary suit, without regard to the citizenship of the parties, or the adequacy of the remedy at law.—Bausman v. Denny, 73 Fed. 69.

[d] (U. S. C. C. Wash. 1896) When a federal court, by the appointment of a receiver, has assumed exclusive control of the operation and management of a railroad, a proceeding to require the receiver by mandamus to comply with a state statute requiring the weighing of cars loaded with lumber is subordinate and ancillary to the suit in which the receiver was appointed, and, as such, within the jurisdiction of the federal court, and removable thereto if com-

Digitized by Google

menced in a state court.—State of Washington v. Northern Pac. R. Co., 75 Fed. 333.

[e] (U. S. C. C. Wash. 1896) An action against a receiver appointed by a federal circuit court, growing out of the transactions of the receiver or his employés, being ancillary to the suit in which the receiver was appointed, is within the jurisdiction of that court, regardless of the citizenship of the parties, the nature of the controversy, or the amount involved.—Carpenter v. Railroad Co., 75 Fed. 850.

[f] (U. S. C. C. Cal. 1897) A suit by or against a receiver of a federal court in the course of the winding up of a corporation is ancillary to the main suit, and is cognizable in the same court, regardless of the amount in controversy. —Lanning v. Osborne, 79 Fed. 657.

5. Intervention or Injunction.

[a] (U. S. C. C. A. 8th Circuit, 1896) The federal circuit court, having jurisdiction of an action, and the custody or control of the fund or property in controversy, may entertain a petition of intervention, and try the issues thereon, without regard to the citizenship of the parties in the main action, or to the amount in controversy under the petition.—Institution v. Miles, 22 C. C. A. 152, 76 Fed. 252.

[b] (U. S. C. C. A. 8th Circuit, 1897) B. and others filed intervening petitions, in suits pending in the United States circuit court for the winding up of certain railroad properties, claiming a fund in the hands of the C. Trust Co. *Held* that, notwithstanding B. and his associates and the C. Trust Co. were citizens of the same state, as the making of the order sought for was properly incident to granting full relief in the pending suits, and as the C. Trust Co. was a mere depositary of the fund, having no valid claim against it, the court had jurisdiction to direct payment of the fund to B. and his associates.—Trust Co. v. Benedict, 24 C. C. A. 56, 78 Fed. 198.

[c] (U. S. C. C. A. 7th Circuit, 1897) A bill to enjoin the prosecution of a creditors' suit pending in the same court is ancillary to such suit, and jurisdiction does not depend on the diverse citizenship of the parties.—Bradshaw v. Bank, 26 C. C. A. 673, 81 Fed. 902.

[d] (U. S. C. C. A. 5th Circuit, 1898) A suit to stay an action on the law side of the court for recovery of lands, and to reform a deed thereto, is an ancillary suit, and the court has jurisdiction without regard to the amount in controversy. —Hill v. Kuhlman, 31 C. C. A. 87, 87 Fed. 498.

[e] (U. S. C. C. N. Y. 1855) A suit in equity to stay proceedings at law pending in a federal court may be maintained in such court without regard to the citizenship or alienage of the parties.—St. Luke's Hospital v. Barclay, Fed. Cas. No. 12,241 [3 Blatchf. 259].

[f] (U. S. C. C. Iowa, 1887) Where a circuit court of the United States has jurisdiction of a suit to foreclose a chattel mortgage, it may entertain a cross bill in such suit, filed by a party who intervenes, and claims to be the owner of a part of the property, although such party, by reason of his citizenship being the same as that of defendant, could not have originated the suit.—Osborne v. Barge, 30 Fed. 805.

[g] (U. S. C. C. Cal. 1897) The circuit court cannot take jurisdiction of an intervention in a merely personal action, in which no fund has come into the possession of the court, by one who is a citizen of the same state as the party against whom his complaint is directed.—Seligman v. City of Santa Rosa, 81 Fed. 524.

[h] (U. S. C. C. Cal. 1897) A bill in equity filed in the circuit court against the parties to an action at law, which has proceeded to judgment in said court, to enjoin the enforcement of such judgment, and for permission to the complainant to intervene in said action and set up a defense, is ancillary to the original action, so far as the question of jurisdiction is concerned, and may be maintained without regard to diversity of citizenship.—McDonald v. Seligman, 81 Fed. 753.

[i] (U. S. C. C. Cal. 1898) A bill filed in a circuit court to enjoin the further prosecution of an action at law pending therein is ancillary to the law action, and the court has jurisdiction without regard to the citizenship of the parties. —Widaman v. Hubbard, 88 Fed. 806.

Digitized by Google

6. Proceedings on Judgments.

[a] (U. S. C. C. A. 5th Circuit, 1894) A bill filed to carry out a decree, in a former suit, establishing a partnership, by which new parties are brought in and new matter charged as a basis of relief, is not a supplemental or ancillary bill, of which jurisdiction can be entertained without regard to the citizenship of the parties.—Phosphate Co. v. McKibben, 13 C. C. A. 36, 65 Fed. 529.

[b] (U. S. C. C. Me. 1827) A bill in equity to enjoin a judgment of the circuit court, brought in such court, is not an original suit (Act 1789, § 11); and it is immaterial that the original plaintiff is a resident and citizen of another state. —Dunlap v. Stetson, Fed. Cas. No. 4,164 [4 Mason, 349].

[c] (U. S. C. C. Ark. 1846) A bill to enjoin a judgment in the circuit court is not considered an original bill between the same parties, as at law, but as growing out of, and as auxiliary to, the suit at law.—Williams v. Byrne, Fed. Cas. No. 17,718 [Hempst. 472].

[d] (U. S. C. C. Ark. 1846) There is no jurisdiction to entertain a bill to enjoin a judgment at law in the circuit court, brought by a citizen of Tennessee, not a party to the judgment, against a citizen of Mississippi, the plaintiff in the judgment.—Williams v. Byrne, Fed. Cas. No. 17,718 [Hempst. 472].

[e] (U. S. C. C. Ark. 1846) But if other parties are introduced, and different interests involved, it is to that extent an original bill, and the jurisdiction of the court must then depend on the citizenship of the parties, and one of the parties must be a citizen of the state where the suit is brought.—Williams v. Byrne, Fed. Cas. No. 17,718 [Hempst. 472].

[f] (U. S. D. C. Mass. 1859) The court has jurisdiction of all proceedings consequent upon the judgment to obtain satisfaction, for the suit is not terminated until satisfaction.—Campbell v. Hadley, Fed. Cas. No. 2,358 [1 Spr. 470].

[g] (U. S. C. C. Ohio, 1862) A creditors' bill, filed to obtain satisfaction of a judgment at law rendered in the same court, is not an original action, irrespective of parties.—Babcock v. Millard, Fed. Cas. No. 699.

[h] (U. S. C. C. Iowa, 1871) The federal court has jurisdiction of a bill filed by defendant in a judgment rendered therein against an assignee of plaintiff, to set aside such judgment for fraud, though both parties are citizens of the same state.—O'Brien County v. Brown, Fed. Cas. No. 10,399 [1 Dill. 588].

[i] (U. S. C. C. Tenn. 1876) The federal court has jurisdiction of all questions arising in the course of the levy and collection of a tax directed by it to be made by a municipality to enforce its judgment.—Brooks v. Memphis, Fed. Cas. No. 1,954.

[j] (U. S. C. C. Mo. 1896) Scire facias to revive a judgment in a federal court being an ancillary proceeding, the court has jurisdiction, even though the parties are citizens of the same state.—Wonderly v. Lafayette County, 77 Fed. 665.

[k] (U. S. C. C. Cal. 1898) A suit to restrain a decree entered in another equity suit in the same court may be sustained in a federal court, although all parties are citizens of the same state, as it is not an original suit, but purely ancillary and supplementary to the previous one.—Broadis v. Broadis, 86 Fed. 951.

7. Proceedings on Bonds.

[a] (U. S. C. C. A. 8th Circuit, 1893) On the expiration of a stay bond the lands of the surety were sold to satisfy the judgment, as allowed by the Nebraska statute, but, in view of a threatened appeal by the surety, the judgment creditor was required, as a prerequisite to obtaining the money, to give a bond conditioned for repayment thereof "in case the order confirming the sale is reversed by the supreme court of the United States." No appeal, however, was taken, but the purchaser of the land brought ejectment to recover it of the stay bondsman, and the supreme court of the United States held that the Nebraska statute did not apply, and the sale was void. Thereupon the court ordered the judgment creditor to repay the money into court, and assigned the redelivery bond to the purchaser of the land. The order was not complied with, and thereafter the purchaser filed a petition on the bond in the same court. *Held*, that this proceeding was merely auxiliary to the former

Digitized by Google

suit, and the federal court had jurisdiction, irrespective of the citizenship of the parties or the amount in controversy.—Lamb v. Ewing, 4 C. C. A. 320, 54 Fed. 269.

[b] (U. S. C. C. Ill. 1877) The federal circuit court has jurisdiction of a suit upon a supersedeas bond given in that court, independent of the citizenship of the parties.—Seymour v. Construction Co., Fed. Cas. No. 12,689 [7 Biss. 460].

8. Enforcing Liability for Costs.

[a] (U. S. C. C. A. 1st Circuit, 1896) A writ of scire facias to enforce the liability for costs of the indorser of a writ is an ancillary proceeding, and may be entertained in a federal court, without regard to the citizenship of parties or amount in controversy.—Washburn v. Palace-Car Co., 21 C. C. A. 598, 76 Fed. 1005, affirming (1895) 66 Fed. 790.

9. Suit to Set Aside Conveyance.

[a] (U. S. C. C. Pa. 1886) Pending a suit in equity brought by assignees in bankruptcy to set aside a conveyance alleged to have been made by the bankrupt in fraud of creditors, a creditor to whom the assignees have, under order of court, conveyed the bankrupt's title, may file a bill in the cause in the nature of a supplemental bill, although a citizen of the same state as defendants.—Miller v. Rogers, 29 Fed. 401.

[b] (U. S. C. C. Pa. 1886) In such a case, while a bill to obtain the benefit of a depending suit by a party who acquired the plaintiffs' title by transfer from them pendente lite may be technically and to some intents an original bill, it is essentially supplementary. Such bill is not, in a proper sense, the commencement of an original suit, but is rather the mere continuation of the former suit.—Miller v. Rogers, 29 Fed. 401.

10. Proceedings in Other Courts.

[a] (U. S. C. C. W. Va. 1889) A suit was brought in the United States circuit court for Ohio for the foreclosure of a mortgage on defendant's railroad, which extends through Ohio and West Virginia. After the appointment of a receiver in that suit, complainant filed a bill termed an "ancillary bill," in the United States circuit court for West Virginia, reciting the proceedings in the first suit, and exhibiting a copy of the bill therein, and praying the court to take "ancillary jurisdiction" and furnish such relief as might be necessary to accomplish the purposes of the first suit, "and for such other and further relief as the nature of the case may require," etc. *Held*, that the bill should be dismissed. If the aid of the court in West Virginia is desired in enforcing the mortgage, it must be invoked by an independent suit.—Mercantile Trust Co. v. Kanawha & O. Ry. Co., 39 Fed. 337.

[b] (U. S. C. C. Ga. 1894) The duty of a court in which proceedings are pending, ancillary to proceedings in another district, for the foreclosure of a mortgage, is only to consider and dispose of rights and liens peculiar to its jurisdiction, and to the property particularly within its charge.—Clyde v. Railroad Co., 65 Fed. 336.

(94 Fed. 213.)

THE BARNSTABLE.

(Circuit Court of Appeals, First Circuit. May 11, 1899.)

No. 249.

SHIPPING—CONSTRUCTION OF CHARTER PARTY—RISK OF COLLISION.

A provision of a charter party that "the owners shall pay for insurance on the vessel," to be given any effect as between the parties, must be construed as requiring the owners to insure against all such losses as would otherwise fall on the charterer; and, where the owners failed to procure insurance, they made themselves insurers, and cannot cast upon the charterer the burden of paying damages recovered against the vessel for collision, against which they might have insured.

Digitized by Google

Appeal from the District Court of the United States for the District of Massachusetts.

J. Parker Kirlin, for appellant.
Charles T. Russell, for appellee.

Before PUTNAM, Circuit Judge, and WEBB and ALDRICH, District Judges.

WEBB, District Judge. Little need be added to the careful opinion of the district judge in this case (84 Fed. 895), which is a case of contract between the owners and the charterers of the steamship Barnstable. There can be no controversy as to the terms of the charter, for it is in writing and is in evidence. The difference relates to the twenty-second article of the charter, which is in these terms: "The owners shall pay for the insurance on the vessel." What are the obligations imposed by this provision of the contract?

In argument there has been some discussion concerning the mutual relations, under the charter, between the parties. The owners contend that the charterers were bailees, and held to all the liability of bailees, and this contention the charterers controvert. We do not think that the determination of that question will aid in the decision of the case; for whether or not, in the full and strict sense, the charterers were bailees, they would be, independently of this insurance clause, chargeable with some of the risks of the ship, while the owners would bear others. Assumption by the owners of insurance against risks affecting themselves alone would be of no advantage to the charterers, who would, in no event, be answerable for losses arising from such risks, and had no interest in insurance against such losses. The insertion of this clause in the charter has no meaning unless it be to make such insurance as would profit the charterers, which could only be effected by insurance against losses which would fall upon them, against all risks attaching to them. This insurance clause must have been intended for their protection, and could have been understood by them in no other way, and the agreement of the owners was not to partially, but wholly, protect them, and to relieve them of the expense of insuring themselves. In effect, it said to the charterers: "Your only responsibility will be to pay the hire of the ship; all other things shall be our care and at our charge." If, having so agreed, they chose to take the hazard of loss, and to save the cost of a policy, they made themselves insurers, and, after the loss, cannot throw it upon the charterers. The decree of the district court is affirmed, with interest, and the costs of this court are adjudged to the Boston Fruit Company, appellee.

Digitized by Google

(94 Fed. 214.)

ULSTER S. S. CO., Limited, v. CAPE FEAR TOWING & TRANSPORTATION CO. et al.

(Circuit Court of Appeals, Fifth Circuit. March 28, 1899.)

No. 744.

1. SALVAGE—SERVICES.

Services of tugs in towing a steamer from an offshore sand bar, on which she had grounded, in connection with their carrying out the steamer's anchors to enable her to assist in getting off the bar, are in the nature of salvage services, authorizing compensation on that basis.

2. SAME—COMPENSATION.

An allowance of $13,000 for salvage services in getting a steamer off a sand bar should be reduced 50 per cent., though the steamer was worth $300,000, the value of the tugs employed being only $18,000, all the services being rendered under the direction and control of the master of the steamer, the real services which put her afloat being, in the main, rendered by herself, operated by the master and crew, it appearing probable, the good weather continuing, that without the services of the tugs the master would have successfully floated her through the use of his own crew and appliances, no risk being incurred by the salvors, and the tugs being exposed to no danger, the skill shown in rendering the services being of the ordinary kind, the labor being the ordinary employment of the tugs and persons engaged, the time employed being less than a day, and it appearing that extraordinary awards were given by the decree to members of the crews of the tugs, such as $300 to cooks and firemen, who performed no services out of their usual routine, and whose wages were $1 a day.[1]

3. SAME—ALLOWANCE TO CREWS.

Where salvage services which occupied less than a day are of the lowest order, and the crews of the tugs perform only services in the ordinary course of employment, the award to them should not be more than two months' pay.

Appeal from the District Court of the United States for the Eastern District of Louisiana.

On September 24, 1897, at 7:20 a. m., the British steamship Torr Head, bound on a voyage from New Orleans to Belfast, drawing about 25 feet of water astern, grounded on the Frying Pan Shoals off the coast of North Carolina, near the mouth of Cape Fear river, between five and six miles inside of the light-ship there stationed, and about a mile east-northeast from the black buoy. She had been swept out of her course about 40 miles by an abnormal setting of the Gulf Stream to the south and west, caused by a hurricane that had passed over the locality a day or two before. Frying Pan Shoals are described in the United States Coast Pilot as especially dangerous to navigation "on account of the great distance they make out from the shore," and "on account of their distance from the land, and the strong tidal currents which set across them in strong winds." They are said to consist "generally of sand, shifting to some extent with every gale." At the time of this mishap the weather was fine, the barometer high, and the sea smooth. The weather remained fine, with light breezes, the whole of the 24th and 25th. The ship grounded without any noticeable shock. About three years before this, the ship Valedo, 310 feet long, drawing 21.6, grounded in the same way, and at about the same spot, and got off without assistance and without injury by turning herself around with her anchors. When the Torr Head grounded, soundings were immediately taken around the ship, and 30 feet of water was found over the stern, shoaling gradually to 25 feet amidships, 22.6 at the break

[1] As to salvage awards in federal courts, see note to The Lamington, 30 C. C. A. 280.

Digitized by Google

of the forecastle, and 24 over the stem. The character of the bottom was examined, and found to be soft sand. There was deep water both ahead and astern of the ship. Attempt was made to back her off by filling the after water tanks, and shifting cargo from forward aft, so as to put the vessel by the stern, and by going astern with the engine; but this did not succeed. While these operations were going on, the steam tug Jacob Brandow, about 9:30 a. m., came alongside, and offered assistance, which was refused. About 11:30 a. m. the assistance of that tug was engaged, with the understanding that the amount of compensation to be paid was to be settled by arbitration; and the tug took a stern line to help pull the ship off. The captain of the Torr Head understood that he was employing them for a towage service. About 12.30 p. m. the tug Blanche arrived, with a salvage crew in a lifeboat, but the services of these salvors were refused, and the tug Blanche was engaged on the same terms as the Brandow to take a line and tow astern. About 3:30 p. m., while the Brandow and the Blanche were towing astern, a small steam tender, called the Isabel, came out, and offered her assistance, and she was engaged to run out the starboard anchor, but her captain considered his vessel too small for that service, and she was told to take a line, and tow astern with the other tugs. This towing astern by the three tugs continued until 5 p. m., with little or no result. The captain of the Torr Head then ordered the tugs to stop towing, and to go forward, and run the steamship's starboard anchor out, broad off on the starboard bow, which the tugs Brandow and Blanche proceeded to do, and about 6:30 p. m. got out the anchor and about 40 fathoms of chain. The three tugs were then set to towing on the starboard bow, and strain was put on the anchor by the ship's steam windlass. The result was that in an hour's time the ship was moved about 70 feet, and was turned almost entirely around; i. e. about 124 degrees, or from N. 56 E., to S. This brought the starboard anchor close under the forefoot of the ship. The captain of the Torr Head then, about 7:30 p. m., asked the tugs Blanche and Brandow to run the starboard anchor out straight ahead, in order that he might heave it tight, so as to keep the ship from moving further on shore, and so that he might jettison some molasses. This the tugs refused to do, and then quit work, saying they would come back the next tide. The captain says they gave as a reason for this refusal that the ship was all right, and in no danger. He testifies that he begged, and almost beseeched, them to run this anchor. They gave as their reason for this refusal that they thought it was an obstruction to the vessel in the position she was in. When the tugs quit work and left, the anchors were dropped under the forefoot of the vessel, and the crew was sent to supper. The tug Isabel lay near the ship. The tug Blanche went off a mile or two, and anchored. The tug Jacob Brandow went off towards Wilmington, with the lifeboat in tow, to take the occupants ashore. At 8:45 p. m., after supper, the crew began to jettison cargo,—staves and molasses,—which jettison continued until 10 p. m. At this time the tug Blanche came back, and offered the services of a pilot, which were refused. Soundings were made at dead low water, at 9:30 p. m., around the ship, and deep water was found ahead, and 21 feet amidships. About 11 p. m. the tug Blanche came back again, and, after some difficulty, and protests that she was not strong enough, was persuaded to run the anchor straight out ahead, with 30 fathoms of chain. In this work the Isabel helped her. The ship then heaved tight on this chain, and commenced to pump out her tanks to lighten the ship, and continued to jettison cargo. About 1 a. m. on the morning of the 25th the tug Brandow came back, and all the tugs were ordered straight ahead to tow, the ship meanwhile working her engines, and putting a strain on the anchor chain. About 3:30 a. m. it was found that the ship was moving, and a heavy strain was put on the anchor chain. About 4 a. m. the anchor hove home, and the ship's head began to fall off to port. The tugs were then ordered to tow on the starboard bow. At 4:15 a. m. the ship began to move ahead. At 4:25 she was all afloat, and at 4:30 a. m. the ropes were cast off, and the ship proceeded on her way to Belfast, the captain saying to the tugs he would give them full credit for all they had done. While she was aground, she "lay easily," as one of the libelants admits.

It is claimed in the libels that she was in danger of being hogged, because she was aground amidships; but the testimony is that she was water-borne

Digitized by Google

bow and stern all the time, and was never at any time in any such danger. It is further claimed that she was pounding. One of the witnesses for libelants says she pounded on the morning of the 25th, before she was hauled off, but that he was not aboard, and could not say how hard she pounded. Those who were aboard of her say she moved slightly and easily in her bed in the sand. When the Torr Head reached Belfast, she was docked, and the only injury she suffered from this grounding was the denting of five of her plates, which were taken out, rerolled, and put back in position. The small damage done, as thus indicated, to a ship of her enormous weight and length, shows the insignificance of the pounding. The cargo jettisoned was 10 tons of staves and 650 barrels of molasses, weighing about 200 tons. The Torr Head is 453 feet long, of 5,910 gross and 3,967 net tonnage. She is a twin-screw steel ship, launched in March, 1894, and cost, new, £80,000, and had been three years in service. Figuring her annual depreciation at 7 per cent., which is the lowest allowed, as the master testifies, it would make her value at that time about £63,200, or, in American money, $305,888. This is the only evidence in the record as to the value of this ship. The tug Jacob Brandow is a wooden vessel, built in 1874, and was therefore 23 years old at that time. She is 78 feet long, 17 feet beam, 8 feet depth, net tonnage 32.69 tons, with one boiler 14 feet long, 96 inches in diameter (allowance of steam 80 pounds per square inch), and one condensing engine of 22½ inches diameter of cylinder and 2 feet piston stroke. The evidence of her value is that libelants bought her for $5,200 more than two years before this time. She had on this occasion a crew of six men,—master, mate, engineer, fireman, cook, and deck hand. The tug Blanche is an iron vessel, built in 1878, and was therefore nineteen years old. She is 83 feet long, 17.9 feet beam, 10 feet depth, net tonnage 47.12 tons, with one boiler 11½ feet long and 107 inches in diameter (allowance, 75 pounds of steam to the square inch), and one condensing engine of 20 inches diameter of cylinder and 22 inches stroke of piston. The evidence of her value is that libelants had bought her three years prior to that date for $11,000. She had a crew of six, the same as the Jacob Brandow. The tug Isabel is a small, wooden vessel built at Buffalo, on Lake Erie, in 1891, and was therefore six years old at that time. Her certificate of inspection does not give her dimensions, but states that she is of 13.32 net tons burden, has one boiler 9 feet long, of 75 and 88 oval inches in diameter (steam allowance, 115 pounds per square inch), and one keel condensing engine of 14 inches diameter of cylinder and 16 inches stroke of piston. There was no evidence adduced as to her value. She had a crew of five persons,—master, mate, engineer, fireman, and cook. The value of the salved vessel, exclusive of cargo and freight, now involved in this suit, was therefore about $306,000, of the salving vessels about $18,000, and the number of persons on the vessels engaged in assisting the Torr Head 17. The Torr Head touched at 7:20 a. m. on September 24th, and went on her voyage 4:30 a. m. September 25th, being aground about 21 hours. The tugs worked during only a portion of this time. The Brandow worked from 11:30 a. m. to 7:30 p. m. on the 24th, being 8 hours on that day, and from 1 a. m. to 4:30 a. m. on the 25th, being 3½ hours on that day; or a total of 11½ hours. The Blanche worked from 12:30 p. m. to 7:30 a. m. on the 24th, and from 11 p. m. on the 24th to 4:30 a. m. on the 25th; a total of 12½ hours. The Isabel worked from 3:30 p. m. to 7:30 p. m. on the 24th, and from 11 p. m. on the 24th to 4:30 a. m. on the 25th, a total of 9½ hours. With the exception of the two occasions when the anchor was towed out, once by the Brandow and Blanche and once by the Blanche and Isabel, the work consisted of taking a line and tugging at the Torr Head. All of this work was done in fine weather and smooth sea, and without damage or particular risk of person or property. The business of these boats was to seek towage in the waters where they were working on the Torr Head, and further out, and all up and down the coast for 40 miles, and both boats and crew were engaged in their ordinary vocations during the whole time of this service. These facts appear clearly in the contest made in this court between the crews and the owners of these vessels as to the division of the award between them. None of the crews of the tugs at any time left their own vessels, or went on board the Torr Head, except that two men paddled around the Torr Head in a small dory, and took soundings. The

Digitized by Google

tugs at all times were acting under the orders and directions of the master of the Torr Head, who had sole charge and direction of the services rendered. The two tugs Brandow and Blanche belong to the same owners, the Cape Fear Towing & Transportation Company. The tug Isabel is owned by John L. Grim. The owners of these tugs filed separate libels in rem for salvage against the Torr Head when she returned to the United States in November, 1897, claiming in this proceeding salvage not only on the vessel, but also on her cargo and freight. Six of the crew of these vessels—two from each—also filed a separate libel in rem, making similar claim. All three libels were consolidated.

It is conceded that no claim can be made in this present cause for salvage on either the pending freight or the cargo. The district court found that the services rendered were of the nature of salvage services, and made an award of $13,000, to be divided equally between the crews and the owners of the three tugs. The decree of distribution shows as follows:

Amount awarded herein, thirteen thousand dollars	$13,000 00
To the Cape Fear Towing & Transportation Company, owner of the salving tugs Blanche and Jacob Brandow, and to John L. Grim, owner of the salving tug Isabel, one-half of said sum, to wit, the sum of	$ 6,500 00
—Two-thirds thereof to go to the Cape Fear Towing & Transportation Co., and one-third to John L. Grim. To T. Jeff Smith, William (Dock) Davis, C. B. St. George, Sam Betts, Jno. Risley, George Penny, and Elijah Burruss, members of the crews of said tugs Blanche, Jacob Brandow, and Isabel, who have claimed salvage herein, seven-seventeenths ($^7/_{17}$) of the remaining half, $^7/_{17}$ of $6,500.00 being the sum of	2,676 47
To the Cape Fear Towing & Transportation Co. and John L. Grim, owners as aforesaid, the remainder of said sum of $6,500.00, to wit, $^{10}/_{17}$ of $6,500.00, being the sum of	3,823 53
—To be divided ⅔ and ⅓ as aforesaid.	
Total award of salvage	$13,000 00

The said sum of $2,676.47 awarded to the crew, as afore stated, to be divided among them in proportion to their wages, respectively, as follows:

Name.	Rank.		Wages.	To Receive.
T. Jeff Smith	Engineer,	Tug Blanche	$3 25	$694 57
Wm. (Dock) Davis	Fireman,	Tug Blanche	1 00	308 70
C. B. St. George	Mate,	Tug Jacob Brandow	1 17	361 20
Sam Betts	Deck hand,	Tug Jacob Brandow	25	77 20
Jno. Risley	Engineer,	Tug Isabel	2 00	617 40
George Penny	Fireman,	Tug Isabel	1 00	308 70
Elijah Burruss	Cook,	Tug Isabel	1 00	308 70
Total to crews				$2,676 47

The claimants have appealed against the award, assigning as error: (1) "That the court erred in holding that the services herein were salvage services. (2) That the court erred in fixing the value of the services performed by the libelants at thirteen thousand dollars, said sum being more than double the amount that should have been allowed in this cause." The owners of the tugs have taken a cross appeal, assigning as error "that the court erred in the division of the amount of salvage awarded, to wit, in only one-half of said award (to wit, one-half of thirteen thousand dollars) to your petitioners said Cape Fear Towing and Transportation Company and said John L. Grim, instead of decreeing to your petitioners the whole of said amount, except a mere nominal sum to the crews of said tugs engaged in the salvage service rendered, as the services rendered by them were merely in the nature of their employment."

E. H. Farrar, E. B. Kruttschnitt, B. F. Jonas, and Hewes T. Gurley, for appellant.

Richard De Gray, Thos. Evans, John D. Grace, J. W. Carroll, and Chas. Carroll, for appellees.

Digitized by Google

Before PARDEE and McCORMICK, Circuit Judges, and PARLANGE, District Judge.

After stating the case as above, the opinion of the court was delivered by PARDEE, Circuit Judge.

The ordinary and usual employment of the tugs, for which salvage services are claimed in this case, was in the rendition of towage services in the same waters where the Torr Head was aground. Under the facts, it is fair to presume that the original employment of the tugs by the master of the Torr Head was really to render towage services, for which compensation was to be made whether they successfully aided the Torr Head in getting afloat or not. This appears from the undisputed evidence of the master, who employed the libelants, and agreed to fix their compensation by arbitration. It also appears to have been the idea of the master of the tugs, because, of their own motion, and against the wishes of the master of the Torr Head, they quit work at 7:30 p. m. on the first day of employment, and the tug Jacob Brandow entered into other employment. The services of salvors, to entitle them to compensation as such, must be successful, and, as a general rule, and necessarily, they must be continuous. In this connection it is significant to note that the assignment of error by the libelant owners of the tugs in their cross appeal, in which they claim that the crew should be awarded only a nominal sum, is to the effect that the services of the crews were merely the ordinary services rendered by them under their employment. The district court found that the services rendered by the libelants were in the nature of salvage services entitling the libelants to compensation. Looking at the services actually rendered, all were within the usual employment of the tugs and their crews. The only peculiar salvage service rendered was in the carrying out of the anchors of the Torr Head, and, considering this valuable service, in connection with the towage, the finding of the district court that the services were in the nature of salvage services, entitling the libelants to compensation, is not erroneous. We think it proper to emphasize the fact that all the services rendered and performed were under the direction and control of the master of the Torr Head, and that the real services which put the Torr Head afloat were, in the main, rendered by the Torr Head herself, operated by her master and crew.

The real contention before us is in regard to the matter of compensation. The district court allowed $13,000, and directed its disposition, half to the owners of the tugs and half to the crews of the respective tugs. The argument is pressed in this court that the amount awarded in a salvage case is so largely within the discretion of the district court that it is not to be disturbed, except for gross overallowance, palpable mistake, and the like. The true rule appears to be as stated in The Connemara, 108 U. S. 359, 2 Sup. Ct. 754, as follows:

"In The Sybil, 4 Wheat. 98, Chief Justice Marshall said: 'It is almost impossible that different minds contemplating the same subject should not form different conclusions as to the amount of salvage to be decreed, and the mode of distribution.' And by the uniform course of decision in this court during

Digitized by Google

the period in which it had full jurisdiction to reverse decrees in admiralty upon both facts and law, as well as in the judicial committee of the privy council of England, exercising a like jurisdiction, the amount decreed below was never reduced, unless for some violation of just principles, or for clear and palpable mistake or gross overallowance. Hobart v. Drogan, 10 Pet. 108, 119; The Camanche, 8 Wall. 448, 479; The Neptune, 12 Moore, P. C. 346; The Carrier Dove, 2 Moore, P. C. (N. S.) 243, Brown & L. 113; The Fusilier, 3 Moore, P. C. (N. S.) 51, Brown & L. 341."

Many cases have been cited on one side to show that, compared with allowances made for salvage services in many cases of more or less similar circumstances, the amount allowed in this case was moderate and reasonable; and, on the other hand, to show that the amount allowed was very high, and out of all proportion to the services rendered. It is profitless to discuss these cases, as confusion could only come from trying to apply them in the present case. The Hesper, 18 Fed. 696, is, however, a case in which the circumstances are so similar that it is well to refer to it. The Hesper, worth $106,500, ran aground in the sand on Galveston Island, about 20-odd miles off the port of Galveston, and remained aground for three days; one-third of her cargo was lightered by tugs, which were worth $35,000; the weather was good; and the court found that:

"The Hesper, when aground as aforesaid, was in a condition of peril and distress, hardly likely to be able to get out of danger by her own efforts, even if the weather had been certain to continue favorable for many days, and certain to be wrecked if the weather should prove to be bad; that the services rendered the Hesper by the libelants' boats were salvage services, but of the lowest grade, involving neither risk of property, peril of life or limb, or unusual exposure, or gallantry, courage, or heroism, and the same will be fully compensated by double compensation on the basis of towage and lighterage services."

In that case the district court allowed the sum of $8,000 salvage. This amount was cut down by the circuit court on appeal to the sum of $4,200; that sum being double compensation for towage and lighterage. In the instant case, we find that the Torr Head was aground in a condition of peril and distress for less than one full day; that the services rendered by the libelants' boats were salvage services, but of the lowest grade, involving neither risk of property, peril of life or limb, nor unusual exposure, nor gallantry, courage, nor heroism. The elements to be generally considered in determining the amount of salvage in a given case, taken from instructions issued by the British Board of Trade, may be stated as follows: (1) The degree of danger from which the lives or property are rescued; (2) the value of the property saved; (3) the risk incurred by the salvors; (4) the value of the property employed by the salvors in the enterprise, and the danger to which it is exposed; (5) the skill shown in rendering the services; (6) the time and labor occupied. In the case of the Torr Head the value of the property saved seems to be large; the danger from which it was rescued was certain, but not determined; there was no risk incurred by the salvors; the value of the property employed was comparatively small, and it was exposed to no danger; the skill shown in rendering the services was of the ordinary kind; the time employed was short, and the labor was the ordinary employment of the tugs and persons engaged. Considering these facts, and

Digitized by Google

that the amount of the salvage awarded was more than two-thirds of the value of the vessels employed in the service, and that under the decree appealed from extraordinary awards are given to the members of the crews of the libelants' vessels,—such as over $300 to cooks and firemen who performed no services out of their usual routine, and whose wages were a dollar a day,—it would seem that the allowance of salvage is out of proportion to the services rendered, and unduly high in reference to the objects for which salvage compensation is allowed. In addition to this, we think it apparent from the record that the allowance of salvage was made largely on the theory that the libelants' tugs and their crews really performed the whole services of saving the Torr Head from impending peril, while the fact is, as clearly appears from the evidence, and hereinbefore referred to, the real services which put the Torr Head afloat were rendered by the master and crew of the Torr Head, using her machinery and appliances; and it seems probable,—extremely probable,—the good weather continuing, that without the services of the libelants' tugs the energetic master of the Torr Head would have successfully floated his vessel through the use of his own crew and appliances.

While it is now conceded that no claim can be made in the present cause for salvage on either the pending freight or cargo, it is admitted that since the appeal was taken the libelants have sued in personam the owners of the Torr Head to recover salvage on both freight and cargo. As the trial judge filed no opinion in the case, we are not advised whether, in making his allowance for salvage, he considered the value of the cargo and freight. On the whole case we conclude that the allowance made against the Torr Head is an overallowance, that it was made on the incorrect theory that the libelants rendered all the services which saved the Torr Head; and that it ought to be reduced at least 50 per cent. On the cross appeal brought by the owners of the tugs it is claimed that the crews on board the libelants' tugs rendered only services within the scope of their employment, and that the amount allowed to the crews is wholly disproportioned to the services rendered. That this claim is well founded appears from an inspection of the decree of distribution wherein cooks and firemen under pay of one dollar per day, and who rendered no services off their own tugs, and were in no wise overworked or exposed, are given nearly a year's pay as a reward, where they were occupied at regular hours in usual work, in a salvage venture over which they had no control.

Proctors argue and cite cases as though there was some fixed rule for distributing salvage compensation between vessels and their crews. Awards in all cases that have come to our notice have been based upon the particular circumstances attendant upon each case, and have varied from one-half the entire salvage awarded to one or two months' pay. In the instant case, as we have found substantially that the salvage services were of the lowest grade, and that the crews aboard of the respective tugs performed only services in the ordinary course of employment, an award of two months' pay would be ample. More than that would be judicial liberality at the expense of the unfortunate.

Digitized by Google

The decree of the district court is reversed and the cause is remanded, with instructions to award the libelants the gross sum of $6,500 salvage compensation, and distribute the same according to the views expressed in this opinion.

(94 Fed. 221.)

THE SARATOGA.

(Circuit Court of Appeals, Second Circuit. March 1, 1899.)

No. 70.

1. MASTER AND SERVANT—ASSUMPTION OF RISK—WORK ON SHIPBOARD.
   The danger of a hatch between decks, usually left open and unlighted, is assumed by one engaged to coal the vessel, and who had been so employed two or three times a week for a year on the same vessel, or vessels of the same construction, and on which the custom as to lighting and covering the hatch was the same; he having, on going towards it, after completion of his work, to make his exit by the ladder leading from it, and without availing himself of one of the lanterns furnished, fallen down it.
2. SAME—EVIDENCE.
   That an open, unlighted hatch between decks, down which an employé, who had been engaged in coaling the vessel, fell when going to it, to make his exit by a ladder leading from it to the upper, was usually unlighted, is shown, in the absence of conflicting evidence, by testimony of witnesses that the kind of light there usually was exactly the same as on the evening of the accident, and that the coaling of the vessel and putting out of the lights had always been done in the same way before, and the testimony of one of the coaling gang that, when he heard some one had fallen, he started along with his lamp in his hand, "which," he said, "I always do. I take my lamp to see my way out."
3. SAME—PROXIMATE CAUSE.
   The proximate cause of one of the coaling gang on a vessel falling down a hatch between decks, open and unlighted, as usual, towards which he started to make his exit by the ladder leading from it to the upper deck, is his failure to make use of one of the lanterns furnished the men to guide themselves as well as their wheelbarrows; he knowing of the hatch and of the custom relative thereto.

Appeal from the District Court of the United States for the Eastern District of New York.

This cause comes here upon appeal from a decree of the district court, Eastern district of New York. The suit was brought to recover damages for personal injuries sustained by libelant in consequence of a fall through an open hatch. The district court held both parties in fault, and divided the damages it assessed ($1,000) equally between them. 87 Fed. 349. The claimant has appealed. The facts sufficiently appear in the opinion.

Chas. C. Nadal, for appellant.
Edwin G. Davis, for appellee.

Before WALLACE, LACOMBE, and SHIPMAN, Circuit Judges.

LACOMBE, Circuit Judge. Plaintiff was one of a gang of about 20 men who were engaged in coaling the steamer while she lay at the

Digitized by Google

pier, the coal being taken aboard through a port on her off-shore side. The coal was elevated from a scow or coal barge, and run through the port by means of a chute which led into the between-decks. It was shoveled into wheelbarrows, wheeled to the bunkers, and stowed therein. The forward ports, through one of which the coal came, are on each side of the vessel, from 35 to 50 feet aft of the forward hatch. The ship was 30 feet wide between decks. Immediately forward of the forward hatch the lower deck was obstructed or bulkheaded, and the machinery and bunkers closed the after end of the compartment. Just forward of the bunkers was a blind hatch (so called because there is no hatch above it on the main deck). This blind hatch was in the route followed by the wheelbarrows, and was closed; a lantern being placed on it, so that those wheeling the barrows might avoid collision with coamings or hatch cover. An iron ladder ran down the forward side of the fore hatch from the main deck to the lower hold. It was by means of such ladder that the gang of coal passers had ingress and egress to and from the between-decks, although occasionally some one would come aboard through the inshore port. The between-decks hatch had the usual 3-inch coaming. The hatchway was 13 feet square. The forward hatches both on the main and on the between-decks were off. On the main deck there was, just aft of the forward hatch, a light with a reflector which sent its rays across the top of the hatchway. No fixed lights were maintained at the hatchway below the main deck, nor any on the between-decks. When the coaling gang was sent down to work, they were provided with a number of hand lanterns,—more than 1 to every 2 men. On the evening in question there were 14 lanterns issued to, and taken by, the gang. Of these, 2 or 3 were passed out through the port, to be used by the men working on the coal scows. They were returned through the port when the work was done. The remaining lanterns were placed about the between-decks, wherever, in the opinion of the workmen, they would do most good; being shifted from time to time as the work progressed. The way in which the work was done on the evening in question was the same as that pursued on all former occasions. The libelant had been working with this gang, coaling the steamers of claimant's line (and the interior arrangements, location of hatches, etc., are the same on all of them), for a year. As the district court found:

"The libelant had complete knowledge of these hatches, their location, and the spaces about them. It was knowledge resulting from actual use of the deck two or three times a week for a year."

What happened on the evening of the accident was this: Libelant arrived late, and went on board through the forward port on the inshore side of the vessel, by means of some planks (apparently not a regular gangplank) which had been extended from the dock. He worked with the gang from half-past 6 to about half-past 8 or 9. The work being finished, the foreman called out, as libelant says, "Put out those lights, and all go ashore." Libelant at that moment of time had no lantern in his hand, nor was there any in his immediate charge. Usually, when work for the evening was finished, if a workman happened to have a light in his hand he extinguished it before he left; but the duty of putting out lanterns placed upon the deck devolved

Digitized by Google

upon two designated men, who were allowed extra time for putting up the tools and attending to the lanterns. The foreman's order having been given, most of the lanterns were extinguished. There remained two, however,—one with the men who were closing the port; another, near the man (Vaughan) who was tying up the shovels. The libelant went to the place where he had left his coat, got the same, and went to the port by which he had come aboard. The foreman, or one of his men, was closing the entrance (there is some evidence that the temporary plank had been removed), and told him to go out the other way. Without waiting for the lantern held by those closing the port, or for the other in use where Vaughan was collecting the shovels, and without taking up any of those standing on the deck, and making an effort to relight it for his individual use, libelant turned and walked straight for the hatch ladder; and, "not knowing," as he says, "that the hatch cover was off," he fell through the opening into the hold.

The district judge held that the hatch coverings were customarily left off when the vessel was in port. The evidence in support of that proposition is, as he expresses it, "full, uncontradicted, and satisfactory." Indeed, it should take but little proof at this late day to satisfy a court of admiralty, sitting in this port, that, when a vessel is lying here between trips, one cargo discharged and the next not yet stowed, it is usual to have her between-deck hatches off, day and night, to sweeten the hold. With the knowledge of this condition of things the libelant must be held charged. Passengers, visitors, or workmen from shore, unaccustomed to the regulation of the ship's internal economy, who are invited by the owner, either expressly or by implication, to wander about in the vicinity of such hatches, may hold the owner responsible for results; but so far as the crew, and the regular gangs of workmen from shore, who are familiar with the location and regulation of the hatches, are concerned, their knowledge of the situation and their continuance at work are held to be conclusive evidence that, as to the particular danger of which they were thus advised, they took their risk. This has been held so many times that it is unnecessary to cite authorities. The principal ones will be found referred to and discussed in the exhaustive opinion of the learned district judge. He held, however, that there was no assumption of the risk of the hatchway being unlighted,—apparently on the ground of some failure of proof that it had theretofore, as a general thing, been unlighted. We do not so understand the testimony. One witness testified that the kind of light they usually had there was exactly the same as on the evening of the accident. Other witnesses testified that the coaling of the ship and putting out the lights had always been done in that way before. Still another witness (called by libelant), Vaughan, the man who was detailed to gather up the shovels, says that, when he heard a call that Craig was in the hold, he got his coat and started along, with his lamp in his hand, "which," says he, "I always do. I take my lamp to see my way out." If there had been any conflicting evidence, perhaps this proof would not be especially strong, but there is none. Nowhere is there any suggestion in the testimony that the claimant had ever maintained a fixed light at the between-decks hatch,

Digitized by Google

or that it was ever lighted otherwise than by the lanterns in the hands of the men using it. Without deciding whether or not the claimant was negligent in failing to maintain a fixed light at the hatch, when it had given 14 hand lanterns to the score of men it set to work in the vicinity of such hatch, we are of the opinion that the proximate cause of the accident was the negligence of libelant and of his fellow workmen in failing to avail themselves of the lanterns furnished them to guide themselves as well as their wheelbarrows, and that the libelant must be held to a knowledge of the conditions under which the work was done, since it had been done in the same way repeatedly and usually during his employment. By continuing to work where the path of ingress and egress was lighted, not by any fixed light, but the casual gleams of lanterns in the hands of himself and his fellow workmen, he must be held to have taken the risk that the carelessness of one or other of them would some day bring about a catastrophe.

Much was said on the argument of the decision in The Manhanset, 53 Fed. 843. The case is clearly distinguishable. There is no analogy between a permanent structure like an open hatch, the exact location of which is known in advance, and a snarl in the fall of a winch, which may be at one time in one place, and at another elsewhere. The decree of the district court is reversed, and the cause remanded, with instructions to dismiss the libel.

(94 Fed. 231.)

DICKEY v. DICKEY.

(Circuit Court of Appeals, Eighth Circuit. April 3, 1899.)

No. 1,072.

1. APPEAL AND ERROR—REVIEW OF FINDINGS OF FACT.
   While the findings of fact made by the court are not as conclusive as the findings of a jury, they are presumptively correct, and will not be disturbed by the appellate court, unless they are against the weight of evidence.

2. LEGACY—DEPENDENT ON VALUE OF ESTATE.
   Where the amount of a legacy is dependent upon the amount of decedent's estate, at a fair valuation, at the time of his death, the value of the estate will be computed by deducting his debts, for which his estate is liable, from the fair value of the assets.

3. SAME—INTEREST.
   A refusal to pay a legacy is not willful and without reasonable cause, so as to entitle legatee to interest, where he claimed a larger sum than entitled to, and, on suit, was allowed only half of the amount claimed.

4. SAME.
   If legacies bear interest within the provisions of Mills' Ann. St. § 2252, allowing creditors interest for all moneys after they become due, on any bond, bill, or promissory note or other instrument in writing, they do so only after an order of the court has been made directing their payment.
   Sanborn, Circuit Judge, dissenting.

Appeal from the Circuit Court of the United States for the District of Colorado.

Digitized by Google

Suit by John M. C. Dickey against Mary S. Dickey, executrix, to recover a legacy. From decree in favor of plaintiff for part of amount claimed, he appeals. Affirmed.

Thomas H. Hardcastle, for appellant.

Henry McAllister (Henry M. Blackmer, on the brief), for appellee.

Before CALDWELL, SANBORN, and THAYER, Circuit Judges.

CALDWELL, Circuit Judge. This is a suit in equity by a legatee to recover a legacy. The material facts are: Clement C. Dickey, late of Colorado Springs, in the state of Colorado, died on March 7, 1893, leaving a will, which was duly probated, containing the following bequests:

"Second. I give and bequeath unto my brother, John Miller Crescent Dickey, of the town of Oxford, Chester county, Pennsylvania, the sum of $20,000 cash, for his own use forever." "Fifth. In case my estate and property at the time of my decease does not amount to more than the sum of $50,000, at a fair valuation, then, in that event, it is my will that my said brother shall receive only the sum of $10,000 cash, instead of the $20,000, hereinbefore mentioned."

His widow was nominated as executrix, and was made the residuary legatee. The complainant claims that he is entitled to the legacy of $20,000, and also interest on the same. The court below decreed that he was entitled only to the sum of $10,000, as it found the estate did not amount to more than $50,000, at a fair valuation, at the time of the testator's death, and also denied the claim for interest. From this decree an appeal was taken to this court, and these are the only questions presented by the record.

The first question is determined by the finding that "the value of the testator's estate at the time of his death, at a fair valuation, did not exceed the sum of $50,000." It is urged that the evidence does not support this finding. While the findings of fact made by a chancellor are not as conclusive as the finding of a jury in a common-law action, they are nevertheless presumptively correct, and will not be disturbed by the appellate court unless it can be shown that they are against the weight of the evidence. In the case at bar, a careful examination of the evidence satisfies all of us that the findings of the court below are supported by the weight of the evidence, and that the value of the estate at the time of the death of the testator did not amount to $50,000 at a fair valuation, but fell several thousand dollars short of that sum.

It would serve no useful purpose to set out in detail the description and valuation of the assets of the estate, and the evidence relating thereto, and the amount and character of the debts which have to be deducted therefrom, to ascertain the "amount" of the "estate and property, at a fair valuation, at the time of" the testator's death. It is obvious that the testator did not mean to exclude his debts from the computation. The amount of the estate, at a fair valuation, at the time of his death, is the fair value of the estate at that time after deducting therefrom the debts then owing by the testator, and which his estate was liable to pay.

Is the appellant entitled to interest on the legacy? At common law, interest was not allowed in any case. 2 Bl. Comm. 454; Hough-

Digitized by Google

ton v. Page, 2 N. H. 42. In this country it is sanctioned by statute, and is entirely a creature of the statute, and only allowed where so authorized, except as damages in certain cases, where the refusal to pay has been willful and without any reasonable cause. Railroad Co. v. Moynahan, 8 Colo. 56, 5 Pac. 811; Dexter v. Collins, 21 Colo. 455, 42 Pac. 664. In the case at bar there has been no willful refusal to pay the legacy, as appellant claimed a larger sum than he was entitled to receive.

Do the statutes of Colorado allow interest on legacies in such a case? Section 2252 of Mills' Annotated Statutes of Colorado reads:

"Creditors shall be allowed to receive interest when there is no agreement as to rate thereof, at the rate of eight per centum per annum, for all moneys after they become due, on any bond, bill, promissory note or other instrument of writing, or on any judgment recovered before any court or magistrate authorized to enter up the same within this state, from the day of entering up said judgment until satisfaction thereof be made; also on money due on mutual settlement of accounts from the date of such settlement; on money due on account from the date when the same became due, and on money received to the use of another and detained without the owner's knowledge."

Legacies are not mentioned in the statute, and for this reason appellee insists that legacies do not bear interest. It is unnecessary to determine that question in this case; for, as shown by the bill, complainant insisted that the value of the estate exceeded $50,000, and that he was entitled to $20,000, while the appellee in her answer denies that the estate was of that value. The statute has never been construed by the supreme court of Colorado in relation to legacies, and, while there is some conflict among the authorities as to that proposition, it is unnecessary to determine it in this case. It is neither charged in the bill nor is there any evidence in the record showing that the court in which the proceedings for the settlement of the estate are pending has ever made an order directing the executrix to pay this legacy. Section 4797 of the Colorado Statute provides:

"Whenever it shall appear that there are sufficient assets to satisfy all legacies and all demands against the estate, the court shall order the payment of all legacies mentioned in the will of the testator, the specific legacies being first satisfied."

This, of course, refers to the court in which the estate is being administered.

Until that court makes an order for the payment of legacies, the executrix can pay the same only at her own peril. It is true that all claims against the estate must be presented within one year, still it requires a judicial determination that the assets in the hands of the executrix are sufficient to pay all demands of the creditors of her testator and to pay the legacies. The legatee can make no legal demand on the executrix until such an order is made, and there can be no default until a legal demand can be made. As interest on a legacy does not arise from a contract, but can only be awarded as damages, it follows that appellant, in the absence of such order, is entitled to no damages for the failure of the executrix to pay him the legacy. The decree of the circuit court is affirmed.

SANBORN, Circuit Judge (dissenting). I concur in the first proposition in the opinion of the majority, but I think the legatee in

Digitized by Google

this case is entitled to interest from June 26, 1894, one year after the will was probated. My reasons are that the statute of Colorado provides that "creditors shall be allowed to receive interest when there is no agreement as to the rate thereof, at the rate of eight per cent. per annum for all moneys after they become due, on any bond, bill, promissory note or other instrument in writing," and this will was a written instrument, under which the legacy became due one year after its probate, and that, in the absence of such a statute and of a provision for interest at common law, it is the established rule in chancery to allow it. Bedford v. Coke, 1 Dick. 181; Swinisen v. Scawen, Id. 117; Godfrey v. Watson, 3 Atk. 517; Bisp. Eq. (5th Ed.) § 178; Young v. Godbe, 15 Wall. 562.

It was the duty of the executrix to convert the estate into money as far as it was necessary to discharge the legacy, and to pay it at the end of the year allowed for administration, and as she never did so, and never offered to do so, it does not seem to me to be a valid defense to the legatee's claim for interest that she neglected to obtain an order from the probate court to pay the legacy, and failed to convert the estate into money, so that she could pay it. The record shows that the estate was ample to pay this claim, and an order to pay it would have passed of course upon the application of the executrix. If she kept the legacy back for her own and others' benefit, she and they ought to pay interest during the delay out of the funds of the estate. Nor does the fact that the legatee claimed $20,000, when only $10,000 was due, seem to me to discharge the executrix from liability for the interest on the amount justly due. She could have stopped the running of the interest by the tender of the payment of $10,000, but as long as she paid nothing, and tendered nothing, interest on the amount actually due under the will should, in my opinion, be allowed to the legatee.

(94 Fed. 244.)

STATE OF MINNESOTA v. CENTRAL TRUST CO. OF NEW YORK.

(Circuit Court of Appeals, Eighth Circuit. April 10, 1899.)

No. 1,133.

TAXATION—LIEN OF TAXES ON PERSONAL PROPERTY—MINNESOTA STATUTE.

Under Gen. St. Minn. 1894, § 1623, which provides that "the taxes assessed upon personal property shall be a lien upon the personal property of the person assessed from and after the time the tax books are received by the county treasurer," the lien so created is paramount to any other lien upon the property, prior or subsequent, in favor of private parties.

Appeal from the Circuit Court of the United States for the District of Minnesota.

On July 13, 1897, the Central Trust Company, the appellee, which is a corporation of the state of New York, filed its bill in the circuit court of the United States for the district of Minnesota against the Duluth Gas & Water Company, a Minnesota corporation, hereafter termed the "Water Company," to foreclose a mortgage executed by the latter company on November 1, 1888, and recorded with the register of deeds for St. Louis county, Minn., on

Digitized by Google

February 23, 1889, whereby the mortgagor company conveyed to said Central Trust Company all and singular the property, real, personal, and mixed, then owned and controlled by it, or that it might thereafter acquire, including its franchises, incomes, rents, works, contracts, buildings, machinery, mains, pipes, lines, poles, and property of every kind, in trust, to secure the payment of an issue of bonds to the amount of $5,000,000, of which sum bonds to the amount of $1,513,000 were subsequently issued. A decree of foreclosure was entered in said cause in the usual form on October 13, 1897, the amount found due under the mortgage being $1,586,059.19. The decree provided that the mortgaged property, in default of payment of said sum within five days, should be sold after six weeks' notice of the sale. On December 29, 1897, the circuit court was advised by affidavits duly filed therein by the complainant that three judgments had been obtained against the Water Company in the district court for St. Louis county, state of Minnesota, where the mortgaged property was located, amounting in the aggregate to $37,088.30, which judgments were for taxes upon personal property that had been assessed against the Water Company for the years 1894, 1895, and 1896; that executions had been issued on said judgments; and that a levy had been made thereunder by the sheriff of St. Louis county on December 18, 1897, upon all the gas and water mains of the Water Company in the city of Duluth, the same being property which was included in the aforesaid mortgage. On the presentation of such affidavits, the circuit court enjoined the sheriff of St. Louis county from proceeding with the levies, and required him to release the same. It gave the state of Minnesota, however, leave to present its demand for unpaid taxes to the master who had been appointed to make the foreclosure sale, and empowered the master to hear and report upon the merits of said claim before there should be any distribution of the proceeds of the sale of the mortgaged property. On February 5, 1898, the master publicly sold the mortgaged property, pursuant to the decree of foreclosure, for the sum of $700,000, the sale being made subject to a prior mortgage lien to the amount of $295,000. This sale was afterwards reported and confirmed. In pursuance of the order empowering the master to hear and decide concerning the merits of the state's claim for unpaid personal taxes, which were alleged to be due from the Water Company, a hearing was had before the master, who reported with respect to said claim that although the aforesaid judgments for personal taxes had been recovered by the state against the Water Company, for the years 1894, 1895, and 1896, to the amount before stated, and that although personal taxes had been assessed against the Water Company for the year 1897 to the amount of $23,569, yet "that the state of Minnesota has, under the laws of the state and the rules and practice of this court, no lien upon the personal property of the Duluth Gas & Water Company, covered by and included in the mortgage or deed of trust in this action foreclosed, paramount to the lien of the bondholders under said mortgage or deed of trust. And the said claim on the part of the state to have said personal taxes of said Duluth Gas & Water Company paid out of the funds * * * derived from said foreclosure sale of said mortgaged property, made under said judgment and decree of this court, is * * * disallowed." The state excepted to this report; but, upon the hearing of the exceptions, they were overruled, and the report was confirmed. The appeal by the state is from the aforesaid order.

J. B. Richards, for appellant.

Jed L. Washburn (Samuel Untemeyer, Charles L. Lewis, and William D. Bailey, on the brief), for appellee.

Before CALDWELL, SANBORN, and THAYER, Circuit Judges.

THAYER, Circuit Judge, after stating the case as above, delivered the opinion of the court.

The laws of the state of Minnesota (Gen. St. 1894, § 1518) declare that:

"The personal property of gas and water companies shall be listed and assessed in the town or district where the principal works are located. Gas and

Digitized by Google

water mains and pipes laid in roads, streets or alleys shall be held to be personal property."

Section 1623 of the same volume of the General Statutes provides that:

"The taxes assessed upon real property shall be a lien thereon from and including the first day of May in the year in which they are levied until the same are paid, but as between grantor and grantee such lien shall not attach until the first day of January of the next year thereafter. The taxes assessed upon personal property shall be a lien upon the personal property of the person assessed from and after the time the tax books are received by the county treasurer."

And section 1562 of the same volume provides, in substance, that the county auditor shall deliver the tax lists of the several districts into which a county is divided to the county treasurer on or before the first Monday in January in each year, and that such lists when received by the treasurer shall be sufficient authority to receive and collect the taxes specified therein. It thus appears that the lien for personal taxes which is provided for by section 1623, supra, takes effect on the first Monday in January succeeding the completion of the tax lists, that being the date on which the tax lists are usually delivered to the county treasurer. The method of assessing taxes in the state of Minnesota corresponds generally with the laws which prevail in other states, with which all are familiar, and need not be stated with particularity. Real property is listed every even-numbered year, and assessed with reference to its value on the 1st day of May preceding the assessment. Personal property is listed and assessed annually with reference to its value on the 1st day of May. Vide Gen. St. Minn. 1894, § 1514. All property is required to be assessed at its full and true value in money. The assessment is made during the months of May and June, and taxpayers are required to make a correct statement of their taxable property to the assessor, and, in case of a failure by the assessor to obtain such a statement, it is made his duty to ascertain the amount of property liable to taxation, and to assess it at what he believes to be its true value. Vide Id. §§ 1536, 1541, 1542, 1546. When the assessment is completed by the assessor, it is returned to the county auditor, and the assessment is thereafter equalized and corrected by a board of equalization. The corrected tax list is subsequently delivered by the auditor to the county treasurer, as prescribed by Id. § 1562. Taxes on personal property are deemed delinquent on the 1st day of March next after they become due, and thereupon a penalty of 10 per cent. is attached. After taxes have been returned as delinquent, the county auditor is empowered to file a revised list of such delinquent taxes with the clerk of the district court of the county wherein the taxes were assessed, and after due notice of such proceedings said court is empowered to enter a judgment against the delinquent taxpayer for the amount of the tax assessed against him, together with the penalty and costs. Vide Id. §§ 1567–1569.

It is contended in behalf of the appellee, and so the lower court appears to have held, that the lien created by the mortgage in favor of the Central Trust Company, from the time when that in-

Digitized by Google

strument was recorded, to wit, February 23, 1889, was and is paramount, so far as the personal property conveyed by the mortgage is concerned, to any lien thereon which the state can assert under a subsequent assessment of such personal property for taxation, and in accordance with that view it was held that the personal taxes due to the state of Minnesota from the Water Company for the years 1894, 1895, 1896, and 1897 could not be paid out of the proceeds of the foreclosure sale, the amount received at such sale being insufficient to discharge the mortgage indebtedness. It cannot be successfully denied that there are some adjudications which support the appellee's contention to the full extent last stated, one of such cases, and the only one which is directly in point, being Binkert v. Railway Co., 98 Ill. 205. In that case a tax had been assessed, pursuant to the laws of the state of Illinois, on the capital stock of a railway company, and an attempt was made some years after the assessment to enforce the collection thereof. By the laws of the state taxes on personalty were made a lien upon the personal property of the person assessed from and after the time when the tax books were delivered to the collector. It was held by a divided court that the tax thus imposed on the capital stock of the railway company, the same being a personal tax, was inferior to the lien of a mortgage which was executed and recorded before the tax book containing the tax was delivered to the collector. The reasons given for the ruling were, in brief, that the lien given by the statute for the taxes in question had no reference to the property which was originally assessed, but was a lien on such personal property as the taxpayer owned at the time of the delivery of the tax book to the collector; that the lien could not take effect before the time which was fixed by the statute; and that the tax book had no greater effect as a lien when delivered to the collector than an execution issued on a judgment recovered in a suit between private individuals. No reference, however, was made in the opinion to a prior decision by the same court (Dunlap v. Gallatin Co., 15 Ill. 7, 9), wherein it was declared, in substance, with reference, it is true, to a tax on realty, that a tax levied by the state is not an ordinary debt, but that, being levied for the support of the government, it takes precedence of all other demands against the owner. In the state of Iowa taxes assessed on personal property are made a lien on real estate owned by the taxpayer, and in that state it was first held (Trust Co. v. Young, 81 Iowa, 732, 39 N. W. 116, and 46 N. W. 1103) that the lien for such a personal tax upon realty of the taxpayer was superior to the lien of a mortgage thereon which was executed before the personal tax became a lien, although the statute of the state was silent as to the relative merits of such liens. This decision was based mainly on the ground that, if the superiority of the tax lien was not upheld, the state would be relegated to the position of an ordinary junior lienholder, and would be compelled to redeem from prior liens to collect its taxes, and in many cases would be defeated in the collection of the same by reason of the existence of prior liens in favor of individuals. In a later case (Bibbins v. Clark, 90 Iowa, 230, 57

Digitized by Google

N. W. 884, and 59 N. W. 290) a majority of the then members of the supreme court of that state reached a different conclusion, holding with respect to a lien on realty for personal taxes that it is inferior to the lien of a mortgage executed before the tax was assessed or became a lien. To the same effect is a decision by the supreme court of South Dakota (Miller v. Anderson, 1 S. D. 539, 47 N. W. 957), and a decision by the court of appeals of Colorado (Gifford v. Callaway, 8 Colo. App. 359, 46 Pac. 626). In the case of Macknet v. City of Newark, 42 N. J. Law, 38, where a city charter made an assessment for taxes a lien on all lands of the taxpayer within the city, it was held that the lien for so much of the tax as was assessed on personal property was subject to the lien of a prior mortgage on the property of the taxpayer. The question whether the lien declared by the last clause of section 1623, supra, takes precedence of prior liens held by private persons on personalty of which the taxpayer is the owner when the tax lists are delivered to the county treasurer, or whether it is inferior to such liens, has never been considered by the supreme court of the state of Minnesota, and, in the absence of an adjudication by that court, we feel at liberty to express an independent judgment.

It has been held frequently that a tax lawfully imposed by the state on its citizens is not an ordinary debt, but is an obligation which by its very nature should be regarded as paramount to all other demands against the taxpayer, although the law imposing the tax does not in express terms declare such priority. And in some well-considered cases the same priority has been accorded to a tax, although the statute imposing it failed to provide in so many words that it should be a lien on the property of the taxpayer. Such decisions proceed on the theory that the maintenance of good government and the public welfare are to such an extent dependent upon the prompt collection of taxes that demands of that nature should take precedence of all claims founded upon private contracts. Butler v. Baily, 2 Bay, 244, 249; Gledney v. Deavors, 8 Ga. 479, 481, 482; Dunlap v. Gallatin Co., 15 Ill. 7, 9; Parker v. Baxter, 2 Gray, 185; George v. Railway Co., 44 Fed. 117, 119; Central Trust Co. v. New York City & N. R. Co., 110 N. Y. 250, 257, 18 N. E. 92; Greeley v. Bank, 98 Mo. 458, 460, 11 S. W. 980; Eastman v. Thayer, 60 N. H. 408, 418; Jarvis v. Peck, 19 Wis. 74; Bank v. Billings, 4 Pet. 514, 562. These decisions also express a thought which is generally prevalent in the public mind that taxes levied by the state for its own support are founded upon a higher obligation than other demands. The fact has also been recognized from time immemorial that every sovereignty ought to be armed with the requisite power to enforce the collection of taxes without fail, and to compel the prompt payment of whatever imposts it sees fit to levy for its own support. In view of that necessity it has been a common practice to provide summary remedies for enforcing such demands, which have been upheld by the courts whenever assailed, although it is quite probable that some of the remedies so provided could not have been sustained as affording due process of law, if the proceedings had related to the collection of purely private debts.

Digitized by Google

Murray's Lessee v. Improvement Co., 18 How. 272, 277, 280; Hersee v. Porter, 100 N. Y. 403, 409, 411, 3 N. E. 338; Sears v. Cottrell, 5 Mich. 251. In the case in hand it is not necessary to infer the existence of a lien for the taxes in controversy, because of the character of the indebtedness, as has been done in some cases, since the state statute has, in unmistakable language, given a lien therefor upon all the personal property of the taxpayer owned by him when the tax lists are received by the county treasurer. Moreover, it cannot be successfully asserted that, in view of the prior mortgage covering the property upon which the sheriff proposed to levy, it was not the personal property of the Water Company when the tax lists were received by the county treasurer, within the meaning of the statute, since, according to the modern view, a mortgagee has a mere lien on the property covered by his mortgage, and is not regarded as the owner thereof. Trust Co. v. Young, 81 Iowa, 732, 739, 39 N. W. 116, and 46 N. W. 1103. The sole question at issue, then, is whether the lien of the state should be regarded as inferior to that of the mortgagee because the legislature did not expressly declare that it should be paramount. In behalf of the appellee it is conceded, apparently, that if the taxes in question had been levied upon real property the lien would prevail over a prior incumbrance thereon, without any express legislative declaration to that effect, and so it has been held on several occasions. Parker v. Baxter, 2 Gray, 185; Eastman v. Thayer, 60 N. H. 408, and cases heretofore cited. This rule with respect to the lien for real taxes is said to be due, however, to the fact that such taxes are assessed originally against the very thing to which the lien applies, whereas personal taxes are assessed against the person, and that when, as in the case at bar, the statute gives a lien for personal taxes on personal property of the taxpayer owned at a certain time, it is not a lien upon the same property on account of which the assessment was levied, and is therefore a lien of less dignity. With reference to this distinction between personal and real taxes, it is only necessary to say that, while it is doubtless true that in some cases personal property owned by the taxpayer when he is assessed for taxation is not identical with that which he owns when the lien attaches, yet we can perceive no reason why this fact should have any effect upon the paramount character of the lien imposed for personal taxes. The state has an undoubted power to create a lien for a personal tax on other property of the tax debtor than that which was assessed for the tax, and to make the same superior to all other liens. It will also be found, we think, that taxpayers generally retain the bulk of their personal property from the time when they are assessed for taxation until the tax becomes a lien, so that in the majority of cases the statute with which we are now dealing will impose a lien on the bulk of the same property on account of which the tax was assessed. But whether it will or will not have such effect must be deemed immaterial in considering the paramount nature of the lien.

It is manifest from a glance at the situation that if the view which prevailed in the lower court is approved, and the lien for

Digitized by Google

the taxes in controversy is reduced to the grade of a lien created by private contract, no more serious obstacle could be interposed in the way of the collection of personal taxes in the state from whence this appeal comes. A large percentage of personal property in nearly every community is usually subject to liens which, in one form or another, have been created by the owners thereof, and, if these shall be held to be of the same dignity as the lien given by a public statute for taxes, the state and the political subdivisions thereof will doubtless lose a considerable portion of the revenues which would otherwise be derived from taxes assessed on personal property. In the present case personal property of great value was covered by a mortgage for a period of 10 years, on account of which the state will lose personal taxes, assessed during a period of 4 years, to the amount of about $60,000, if the contention of the appellee shall prevail. Besides, a construction of the statute which will make a tax lien subordinate to a private lien will afford a ready means of enabling those who are so disposed to avoid the payment of personal taxes altogether, and thereby afford additional ground for the complaint so frequently heard, because so much of the taxable wealth of the country escapes taxation. No state, so far as we are aware, has ever made provision for redeeming property on which it imposes taxes from prior liens in favor of individuals, in order to secure its own revenue therefrom; nor is it either expedient or desirable that laws of that nature should be enacted, and that the state, like an individual, should be compelled to indulge in a race of diligence to secure its taxes. If it is deemed best for any reason to make a lien for taxes which are imposed on personal property subordinate to private liens, then we perceive no reason why it would not be equally wise to exempt all mortgaged personal property from taxation. To counterbalance the evil results which would doubtless flow from such a construction of the statute as was approved by the trial court, the appellee suggests that much public inconvenience will be occasioned by a contrary construction of the statute upholding the paramount character of a tax lien, since a large amount of personal property will be incumbered by a lien for taxes, which will prevent the free alienation of such property, and prove a great hindrance to business transactions. It is possible, of course, that some persons may be deterred from purchasing personal property through fear of an outstanding tax lien; but this fact will in itself prove a strong incentive to taxpayers to pay their taxes, and to do so with reasonable diligence. Upon the whole, we are satisfied that the public inconvenience resulting from this source will not be serious, and that in any event it is not of sufficient importance to sustain the appellee's contention.

In view of what has already been said, we are of opinion that it cannot be inferred that the lien for personal taxes declared by section 1623, supra, was intended to be subordinate to all prior private liens, because the legislature failed to say that it should be deemed paramount. On the contrary, considering the character of the obligation and the dignity usually accorded to such liens, in public estimation, and above all, considering the necessity which

Digitized by Google

exists for giving them priority in order that the public revenues may be promptly and faithfully collected, we conclude that the inference should be that the lien was intended by the legislature to be superior to all liens, prior or subsequent, claimed by individuals, and that nothing should be allowed to overcome this inference but a plain expression of a different purpose found in the statute itself. In a very analogous case (Morey v. City of Duluth, 77 N. W. 829) the supreme court of Minnesota has recently acted strictly in accordance with the latter view, holding that a clause in a city charter authorizing an assessment to be made on lands for street improvements, and making the assessment a lien, but which did not declare the same to be paramount to prior incumbrances, must necessarily be regarded as superior to such incumbrances. It is also worthy of notice that in the mortgage under which the appellee claims it was careful to insert a provision binding the Water Company to pay and discharge each year "all taxes and assessments of every kind which may be lawfully levied and assessed upon all or any part of the franchises and property hereby conveyed, so as to keep the said property free and clear from any incumbrance by reason thereof." From this provision found in the mortgage it may be fairly inferred that the mortgage was taken with the understanding, on the part of the mortgagee, that the taxes thereafter assessed on the mortgaged property, whether real or personal, would be paramount to the claims of the bondholders. It results from these views that the order and decree of the circuit court from which the appeal was taken were erroneous. It is accordingly ordered that the same be reversed, and that the case be remanded to the circuit court, with directions to vacate the erroneous order, and in lieu thereof to enter an order directing the payment, out of the proceeds of the foreclosure sale, of the taxes imposed in favor of the state of Minnesota for the years 1894, 1895, and 1896. Inasmuch as the amount of the taxes assessed for the year 1897, which claim has not as yet been reduced to judgment, is in dispute, and litigation appears to be pending in the state courts relative to the amount of the taxes for that year, the order with reference thereto will be that, when the amount of said taxes for the year 1897 is definitely fixed and determined by the proceedings pending in the state court, the amount of such taxes be also paid out of the proceeds of the foreclosure sale, and that in the meantime funds adequate for that purpose be retained in the registry of the court.

Digitized by Google

(94 Fed. 251.)

CURTIS et al. v. LAKIN et al.

(Circuit Court of Appeals, Eighth Circuit. April 10, 1899.)

No. 1,106, December Term, 1898.

1. LACHES—PARTNERSHIP ACCOUNTING—ENFORCEMENT OF TRUST.

The plaintiffs and the defendant L. entered into a partnership for the purpose of locating, developing, and operating mines. While prospecting under the agreement, L. located two mining claims in his own name, contrary to the agreement; and on July 27, 1894, conveyed a part interest to third persons; and on March 6, 1896, the entire interest in the claims was transferred to the defendant corporation, organized for that purpose, in exchange for stock. The complainants were first advised of the sale of part interest in the claims in 1895, but never communicated with L., for the purpose of obtaining an accounting or ascertaining his intentions. On November 13, 1897, about one year after plaintiffs were informed of the conveyance to the corporation, and two years after the first conveyance, and after the claims had increased in value to an amount exceeding $200,000, and expenditures had been made in developing them, they filed a bill against L. and the corporation, asking for a dissolution of the partnership and an accounting, and that the defendant corporation be decreed a trustee for the benefit of plaintiffs. *Held*, that the plaintiffs had been guilty of laches barring the suit.

2. SAME—EXCUSE.

The delay of plaintiffs in commencing suit against their co-partner for dissolution and an accounting, and to declare a third person purchasing partnership property from him a trustee, is not excused by the fact that the partnership agreement had been misplaced, and was not found until shortly before the suit was commenced.

3. SAME—ENFORCEMENT OF EXPRESS TRUST.

Where a trustee of an express trust openly repudiates it, and asserts a title in himself to the trust estate, with the knowledge of the beneficiary, the same diligence should be exercised by the person injured in asserting his rights as is required of one asserting a constructive trust, or attempting to rescind a contract on the ground of fraud or mistake.

4. SAME—ENFORCEMENT OF PROPERTY RIGHTS.

One claiming an interest in mining property that is subject to great and sudden fluctuations in value, or the value of which is uncertain, cannot remain silent and inactive, awaiting developments, while those in possession are expending money in its development, and a court of equity will deny him relief, where he has failed to bring suit within a comparatively short period.

5. SAME—INTERESTS OF INNOCENT PURCHASERS.

Partners instituting suit to compel a co-partner to account for the proceeds of partnership property transferred to a corporation in exchange for stock, and to compel the corporation to transfer to them the stock, where it does not appear that the corporation had notice of their claim, and the stock may have passed into the hands of innocent purchasers, must proceed with reasonable diligence, and, where they have waited a year before commencing suit, relief will be denied.

Sanborn, Circuit Judge, dissenting.

Appeal from the Circuit Court of the United States for the District of Utah.

The bill in this case was filed by M. J. Curtis and A. D. Bowley, the appellants, against Josiah S. Lakin and the Sacramento Gold Mining Company, the appellees, on November 13, 1897, and was subsequently amended on March 8, 1898. In the original and amended bill the following facts were alleged, in substance: On February 1, 1892, Josiah S. Lakin, A. D. Bowley, and M. J.

Digitized by Google

Curtis associated themselves together "for the purpose of locating, developing, and operating mines in the states of California, Nevada, and such other states and territories or mining districts that may come to their notice." By the agreement, which was signed on said date at Sacramento, in the state of California, each of said parties agreed to "deposit into one general fund the amount of $500, to be drawn upon for the purpose of paying any and all expenses that shall accrue in locating, developing, and operating such mines as may come into the hands of said Lakin, Bowley, and Curtis." They further agreed that, in addition to the general traveling expenses that might be allowed, there should also be allowed not less than one hundred dollars per month for the time occupied by either of the parties to the agreement in locating, developing, and operating mines, or in other business connected therewith, which sum was to be paid out of the general fund. While prospecting under said agreement, Lakin, on March 14, 1892, located two mining claims in Tooele county, Utah, called the "Sacramento" and "Excelsior" claims, which were located, as it was alleged, by Lakin in his own name, contrary to the intent and purpose of the aforesaid agreement. After making these locations, Lakin returned to California in June, 1892, and traveled through that state and the state of Nevada, prospecting for mining claims, which was done at an expense of several hundred dollars, the expenses being paid out of "assets furnished by said partnership." He did not return to Utah until March, 1894, and prior to his return he consulted with Curtis and Bowley, the complainants, about filing notices, as an act of congress provided might be done, in lieu of doing the usual assessment work on said Sacramento and Excelsior claims. Before returning to Utah, Lakin called upon the complainants, and also advised with them as to the expediency of selling the aforesaid claims for the sum of $7,500, saying, in substance, that a party in Utah had offered that sum for the claims. The complainants advised against such sale; nevertheless Lakin returned to Utah, and on July 27, 1894, sold an undivided one-sixth interest therein for $5,000. On the same day, July 27, 1894, he contracted to sell an additional one-third interest in the claims for $10.000, which latter sale was subsequently consummated, and the money was received by Lakin. The complainants did not hear of the sales aforesaid until the year 1895, when they were informed of the fact, and at the same time heard that the sales had been made by Lakin to obtain funds to develop the property, and that he was developing it. Subsequent to July 27, 1894, the claims were so developed, by Lakin and others to whom he had sold altogether a one-half interest therein, as to make them self-supporting, but when they became self-supporting was not stated. The amount of expenses incurred in developing the claims did not exceed $30,000, of which sum Lakin contributed not more than one-half. The development consisted in part in the construction of a mill of the value of $15,000. Lakin never made any demand on the appellants to furnish money for the development and operation of said claims, although the complainants have always been ready to respond to any such demands; neither has he rendered any statement of his expenditures, or made any report of his transactions, with respect thereto. On March 6, 1896, the persons to whom Lakin had sold an undivided one-half interest in said claims associated themselves with Lakin, and formed a corporation known as the "Sacramento Gold Mining Company" (one of the appellees), to which corporation the Sacramento and Excelsior claims, together with some others, were conveyed in exchange for its capital stock. Said corporation issued 1,000,000 shares of stock, of the par value of $5 each, and Lakin and his wife together received one-half of the stock, or, in the aggregate, 500,000 shares, in exchange for a one-half interest in the Sacramento and Excelsior claims. Lakin became the president of said company when it was organized, and also a director therein. The complainants had no knowledge of the action of said Lakin in forming said company "until about one year before the bringing of this suit." When they acquired such knowledge, the alleged partnership agreement of February 1, 1892, had been misplaced, and could not be found, and for that reason the complainants believed that they could not successfully maintain a suit to recover their alleged interest in the claims. The agreement was found, however, in the summer of 1897. The value of the Sacramento and Excelsior claims now exceeds $200,000, and ores have been extracted therefrom of a value exceeding $50,000. In view of the allegations contained in the bill, which have been stated, in substance, the complainants

Digitized by Google

prayed for the dissolution of the alleged partnership; for an accounting, both as against Lakin and the Sacramento Gold Mining Company, with respect to all transactions concerning the aforesaid claims; that the Sacramento Gold Mining Company be deemed to have accepted a conveyance of a one-half interest in the Sacramento and Excelsior claims with knowledge of the complainants' equities; and that it be decreed to hold 333,333 shares of its capital stock in trust for the complainants, and that it be compelled to issue to them the usual certificates for that amount of stock. The circuit court sustained a demurrer to the bill, and eventually ordered that it be dismissed.

James M. Denny, for appellants.

Hiram E. Booth (E. O. Lee and Morris L. Ritchie, on brief), for appellees.

Before CALDWELL, SANBORN, and THAYER, Circuit Judges.

THAYER, Circuit Judge, after stating the case as above, delivered the opinion of the court.

The bill of complaint is disingenuous, in that it fails to state certain facts with that degree of fullness and accuracy which a court of chancery has a right to expect in a case of this character and magnitude, and in that it fails to give information concerning the plaintiffs' conduct in certain respects and on certain occasions, which obviously might have been given had the pleader been disposed to make a frank disclosure of all the material facts and circumstances touching the transactions out of which the controversy arises, and on which the plaintiffs' right to equitable relief depends. For example, the bill does not state the amount of money or property which the plaintiffs advanced to create the general fund which was to be used for the benefit of the alleged partnership, the allegation in that respect being simply that they "contributed to the assets of said co-partnership by furnishing Lakin with money and supplies to travel," etc. It fails to show whether the plaintiffs ever made any complaint to Lakin, in person, because he located the Sacramento and Excelsior claims in his own name, or whether they ever demanded a conveyance to themselves of their alleged interest therein. It fails to allege at what time during the year 1895 the plaintiffs ascertained that Lakin had sold an undivided one-half interest in said claims for the sum of $15,000, or from what source the plaintiffs derived such information; and what is of more importance, perhaps, the bill does not show that the plaintiffs ever communicated with Lakin after being advised of the sale, or that they attempted to do so, for the purpose of obtaining an account of his stewardship, or of ascertaining what he proposed to do with the mining claims in future, although the sale appears to have been contrary to their wishes, and was made as early as July 27, 1894. The bill does not disclose that the plaintiffs have communicated with their alleged partner in any form, or he with them, at any time since March, 1894, when he left Sacramento for the purpose of going to Utah; while it appears that they waited for about one year before bringing this action, after they were advised that the mining claims in controversy had been conveyed by Lakin and his associates to a corporation, and were therefore aware that the stock of the corporation was liable to be placed upon the market, and pass into the hands of innocent pur-

Digitized by Google

chasers at any moment. It is not even averred that the stock issued to Lakin which the plaintiffs seek to recover is still in his hands, or that any efforts were made prior to the filing of the bill to prevent him from disposing of the same for value to third persons. Besides, the excuse which is given in the bill for waiting a year or more after the mining claims were conveyed to the corporation, before bringing a suit or taking any other steps to preserve their right to the property, is unsatisfactory, and therefore insufficient. It is somewhat remarkable, to say the least, that an agreement, upon which the plaintiffs' right to a large interest in a mine, supposed to be of great value, depended, should have been misplaced, and not found for a year, and that intelligent business men should have supposed that the loss of the agreement would necessarily prevent them from establishing their right to an interest in the Utah claims, and that no effort was made in the meantime to obtain from their alleged co-partner other recognition of their interest in the property. In short, the allegations of the bill, in the respect last mentioned, are so vague and unsatisfactory, and the failure of the plaintiffs to disclose whether they have ever held personal communication with the defendant Lakin since 1894, and demanded from him an account or an explanation of his conduct and purpose, is so significant, that we are forced to infer that, for at least two years prior to the filing of the bill, the plaintiffs were well aware that Lakin intended to assert a right to dispose of the Utah claims as his own, without accountability to any one. The facts stated in the complaint, no less than those which might have been stated, but are left undisclosed, leave little room for doubt that Lakin's intentions with respect to the Utah mines, and his assertion of an absolute title thereto, have been well known to the plaintiffs at least since 1895, when they learned that he had sold a half interest therein for $15,000, and had appropriated the proceeds. Men of average intelligence and business sagacity would not ordinarily permit mining property in which they had a large interest, and which they believed to be valuable, to be sold and otherwise dealt with by a third person as his own, without remonstrance on their part, and without seeking for an explanation, unless they were well aware that he asserted a legal right to so deal with it, and that any remonstrance on their part or attempt to obtain a recognition of their rights would be vain and useless, unless it took the form of a suit to enforce their alleged rights. We think, therefore, that the conclusion is well warranted by the allegations of the bill that for more than two years before it was filed the plaintiffs remained silent and inactive, knowing that Lakin claimed the Utah mines as his own, yet intending to assert a title thereto in case they proved to be productive and valuable, but to deny all interest therein and all liability for obligations which Lakin might incur in attempts to develop them, provided they proved to be barren and valueless. This seems to be the only reasonable explanation of the plaintiffs' silence and inaction for a period of two years or more, in view of facts that were then well known to them, when their actions are judged by the tests which are usually applied to determine the motives which prompt human conduct.

Digitized by Google

It results as a matter of law, from the views which we have thus far expressed with reference to the allegations of the bill, that it was filed too late to obtain redress, for the alleged grievances, in a court of chancery. It may be conceded, for present purposes, that the agreement of February 1, 1892, between the plaintiffs and Lakin, created a co-partnership, and that the Utah claims were located thereunder, and that the title thereto, when taken by Lakin in his own name, was held by him in trust for the benefit of himself and his co-partners. Nevertheless, when the plaintiffs were advised, by Lakin's conduct with respect to the claims, that he intended to repudiate the trust and treat them as his own, they were bound to assert their rights with reasonable diligence. The rule that lapse of time will never bar the enforcement of an express trust is applicable to those cases where there has been no repudiation of the trust, or where the beneficiaries have no reasonable ground to believe that the trust has been or will be denied. Wood v. Carpenter, 101 U. S. 135, 141; Oliver v. Piatt, 3 How. 333, 411; Hunt v. Patchin, 35 Fed. 816, 819, 820; Miles v. Thorne, 99 Am. Dec. 390, 391. When a trustee of an express trust openly repudiates it, and asserts a title in himself to the trust estate, and the fact of such repudiation becomes known to the beneficiary, we are aware of no reason why the same degree of diligence should not be exercised by the injured party in making complaint and in asserting his rights which courts of chancery always require to be exercised when a litigant seeks to fasten upon another a constructive trust or to rescind a contract upon the ground of fraud or mistake. The reasons requiring the exercise of diligence in the latter class of cases have been stated many times with great clearness and force, and they are no less applicable to the former class of cases than to the latter. Naddo v. Bardon, 4 U. S. App. 642, 681, 2 C. C. A. 335, and 51 Fed. 493; Godden v. Kimmell, 99 U. S. 201; Wood v. Carpenter, 101 U. S. 135, 139; Lemoine v. Dunklin Co., 10 U. S. App. 237, 239, 2 C. C. A. 343, and 51 Fed. 487; Galliher v. Cadwell, 145 U. S. 368, 373, 12 Sup. Ct. 873; Kinne v. Webb, 12 U. S. App. 137, 144, 4 C. C. A. 170, and 54 Fed. 34; Scheftel v. Hays, 19 U. S. App. 220, 225, 226, 7 C. C. A. 308, and 58 Fed. 457; Wetzel v. Transfer Co., 27 U. S. App. 594, 12 C. C. A. 490, and 65 Fed. 23; Id., 169 U. S. 237, 241, 18 Sup. Ct. 307.

Special reasons existed in the case in hand which required the plaintiffs to be prompt in the assertion of their rights when they became aware that Lakin claimed the Utah property as his own. In the first place, the property consisted of mining claims, which were subject to great and sudden fluctuations in value, and the rule is that one claiming an interest in property of that nature must take steps to establish his title with all convenient speed, if he has reasonable grounds to believe that such asserted interest will be denied by those in possession of the property who are at the time engaged in developing it. In cases of the latter kind, courts of equity will refuse to grant relief if the complainant has failed to bring suit for a comparatively short period after the denial of his rights became known to him, unless a good excuse is offered for such delay; and they will more readily hold that the cause of action is barred by

Digitized by Google

laches if it appears that the failure to sue was occasioned, in whole or in part, by a desire on the part of the complainant to ascertain how development work in progress on the property would affect its value. Where delay is occasioned by motives of the latter sort, —that is, by waiting to see whether developments undertaken by those in possession will be successful or otherwise,—a litigant is justly chargeable with bad faith, which courts of chancery always aim to discourage. Oil Co. v. Marbury, 91 U. S. 587, 592, 593; Johnston v. Mining Co., 148 U. S. 370, 371, 13 Sup. Ct. 585; Clarke v. Hart, 6 H. L. Cas. 633, 656; Bush v. Sherman, 80 Ill. 175.

In the second place, the conveyance of the Utah claims to a corporation, and the issuance of a large quantity of stock representing their value, was an act which made it the duty of the plaintiffs to be prompt in asserting their rights, to protect third parties from loss and damage which they might possibly sustain by purchasing the stock. According to the averments of the bill, the defendant corporation, when it accepted a conveyance of the Sacramento and Excelsior claims, had no notice of the plaintiffs' alleged interest therein, except such as was imputable to it from the fact that Lakin became the president of the corporation and one of its directors. It is not averred that the persons to whom Lakin sold a one-half interest in the claims in the year 1894, and who subsequently conveyed their interest to the corporation and joined in its formation, were advised of the plaintiffs' alleged interest at the date of either of said transactions, and, in the absence of such knowledge, it is obvious that they, as well as all other persons who may have acquired stock in the corporation by purchase from any of the original promoters, are entitled to full protection against the claims which are now asserted by the plaintiffs, and that they ought not to be subjected to the costs of litigation in defense of their rights. In addition to an accounting, the relief sought, as against the corporation, is that it be compelled to issue fully one-third of its capital stock to the plaintiffs, all of which stock was issued on the organization of the company at least one year before this suit was instituted, and the bill does not show that it is possible to afford such relief without injury to numerous third parties into whose hands the stock in question, or a large portion of it, may have passed during the period which elapsed before the bill was filed.

For the reasons stated, we are of opinion that the plaintiffs have been guilty of such negligence in the assertion of their rights, in the light of known facts which should have inspired earlier action, that their bill ought not to be entertained by a court of equity. The decree below is accordingly affirmed.

SANBORN, Circuit Judge (dissenting). This is a bill brought by the appellants against their co-partner Lakin for a dissolution of the partnership and for an accounting. It is not material here that they sought other relief against other parties, for the demurrer cannot be sustained if they are entitled to any relief against any party. The question is therefore whether or not, by a delay of

Digitized by Google

two years after they discovered the faithlessness of their co-partner, they are estopped by laches from obtaining an accounting or any other relief from him. The appellee Lakin held the partnership property in his own name, in trust for his partners and himself. No time runs against an express trust, until it is openly repudiated, and notice of the repudiation is brought home to the cestuis que trustent. Speidel v. Henrici, 120 U. S. 377, 386, 7 Sup. Ct. 610; Swift v. Smith, 25 C. C. A. 154, 159, 79 Fed. 709, 714, and 49 U. S. App. 188. It is conceded in the opinion of the majority that notice of the repudiation of this trust was not received by the appellants until two years before this suit was commenced. The statutes of Utah, as construed by its supreme court, expressly permit cestuis que trustent to maintain an action for an enforcement of the trust, against a trustee who has repudiated it, for four years after the repudiation becomes known to them, when the trust was created by a written agreement, as in the case at bar. Rev. St. Utah 1898, §§ 2876, 2883; Thomas v. Glendinning, 13 Utah, 47, 53, 56, 44 Pac. 652, 654, and cases there cited.

In support of the view that this suit is barred by laches in two years after the partner Lakin repudiated his trust, although the statutes of Utah permit such a suit for four years thereafter, the cases for the rescission of contracts for fraud or mistake are cited in the opinion of the majority. It appears to me, however, that the reason which requires the early application of laches to such cases has no application to the suit of partners against their co-partner for an accounting of proceeds of firm property, and that, the reason ceasing, the rule ceases. That reason is that a contract induced by fraud or mistake is voidable, not void, and it appears to be valid. The parties to it and others may change their position, and incur liability to loss in reliance upon its validity. Hence he who would avoid it must make his attack at once upon his discovery of the fraud or mistake, or he will be estopped by his silence from denying its legality. Rugan v. Sabin, 3 C. C. A. 578, 580, 53 Fed. 415, 418, and 10 U. S. App. 519, 530, and cases there cited. But the partner who holds the property of his firm in trust, and who disposes of it and appropriates its proceeds to his own use, cannot be deceived or misled by the silence or delay of his partners. He is aware of his relation to them. He knows his liability to them, and it seems to me that there is no sound reason why he should be relieved from responding to it, within the time fixed for its enforcement, by the statute of limitations of the state in which he is sued. In Naddo v. Bardon, 2 C. C. A. 335, 340, 51 Fed. 493, 498, and 4 U. S. App. 642, 685, Mr. Justice Brewer, in delivering the opinion of this court, said: "It is doubtless true that, where an express trust is once shown to exist, it is presumed to continue, and therefore no lapse of time will defeat an action to enforce rights under it. But when that trust is repudiated, and knowledge of the repudiation is brought home to the cestuis que trustent, the case is brought within the ordinary rules of limitation and laches." The doctrine of laches is applied by courts of equity, in analogy to the statute of limitations at law, to promote, and not to defeat, justice.

Digitized by Google

Under the statutes of Utah cited, the appellants were allowed at least four years, after they learned that their partner had repudiated his trust, in which to institute a suit against him for a dissolution of their partnership and an accounting, and, in my opinion, their delay of two years ought not to be fatal to it. Bogan v. Mortgage Co., 11 C. C. A. 128, 135, 63 Fed. 192, 199, and 27 U. S. App. 346; Kelley v. Boettcher, 29 C. C. A. 14, 21, 85 Fed. 55, 62, and 56 U. S. App. 363, 383.

(94 Fed. 258.)

PINE MOUNTAIN IRON & COAL CO. et al. v. BAILEY et al.

(Circuit Court of Appeals, Eighth Circuit. April 10, 1899.)

No. 1,103.

1. AGENT — REPRESENTING ADVERSE INTERESTS — NOTICE TO AS AFFECTING PRINCIPAL.

The fact that an agent also acts as agent for the party adversely interested in the transaction does not prevent his principal from being bound by notice to or knowledge acquired by such agent where the principal consents to such adverse agency.

2. SAME—ACQUIRING ADVERSE INTERESTS—NOTICE TO AS AFFECTING PRINCIPAL.

Where one negotiating the sale of a mortgage for a trust company is also the agent of the proposed purchaser for the purpose of investing his money and examining his titles, and pending the negotiations the agent becomes the owner of the mortgage, without the knowledge of the principal, the agency ceases, so that on the subsequent purchase of the mortgage by the principal he is not bound by notice to or knowledge of the agent as to defects in the mortgage or its title, and is a bona fide purchaser for value.

Appeal from the Circuit Court of the United States for the District of Minnesota.

This is an appeal from a decree which dismissed a bill to remove an alleged cloud from the title of the appellants to certain real estate in the state of Minnesota. The alleged cloud consisted of a perfect record title to the property in the appellee Charles Irving Bailey which had arisen in this way: On August 29, 1892, the appellee John D. Blake, who was the owner of the property, made a mortgage upon it to the Metropolitan Trust Company, a corporation, to secure the payment of his promissory note to it for $17,290. This mortgage was recorded on October 27, 1892, and according to the record constituted a first lien upon the property in controversy. P. M. Woodman had been for many years, and was, a general agent of the appellee Charles M. Bailey to procure first mortgages for him, and to examine the title, or to cause the title of the property covered by such mortgages to be examined, on his behalf; and at the same time he was the trust or trading officer of the Metropolitan Trust Company. On account of certain agreements which Blake had made with the appellants, the Pine Mountain Iron & Coal Company and the Germania Safety-Vault & Trust Company, they claim—and for the purpose of the decision of this case their claim will be conceded to be well founded without investigation—that this mortgage was void as against them. Their agreements, however, were not of record, and the record disclosed no notice of their claim. Upon the record their title appeared to be subject to the mortgage, and to be founded upon a deed to Blake, which was not recorded until after the record of the mortgage had been made. Before the trust company paid to Blake the money which it loaned to him on this mortgage, however, the appellants notified Woodman, as the trust officer of that company, of their claim that the mortgage was void. In this state of the facts, Woodman wrote

Digitized by Google

Charles M. Bailey on January 6, 1893, and asked him, if he would like "an 'A 1' 7 per cent. mortgage, $17,290, on at least $60,000 worth of property; mortgage made by a good man, too. We have taken it in, and I think I can get it for you if you wish." On January 9, 1893, Bailey replied that he was short of funds, but that if it was a good mortgage he thought he could send a check for it some time that month. He inquired about the property it covered, whether Woodman could get 7½ per cent. or 8 per cent. interest, and when the note was payable. On January 13, 1893, Woodman wrote to Bailey: "This $17,290 mortgage of which I wrote you is on good city property, and is already made. Our company took it in, and it is exceptionally good, we think, in the matter of security; and I know the maker, and have known him for many years, and believe him to be perfectly good. The mortgage is dated August 29, 1892, and runs for three years at 7 per cent. We could not make it better than 7 per cent., as we get a very small commission." On January 17, 1893, Bailey wrote Woodman that he did not care for the mortgage, but that, if they would allow him one month's interest, and could make anything by sending it to him, he would send a check some time that month. On January 20, 1893, Woodman replied that he could not allow him the January interest, but would give him half of their commission of $122.90, and asked him to send a check for the mortgage on or before February 1, 1893. Some time in January, 1893, while this negotiation was in progress, and before the sale to Bailey was made, or its terms agreed upon, Woodman had bought the mortgage and note of the trust company, in order to raise money for it. The trust company had assigned them to him. He had borrowed of a bank in Minneapolis, upon his individual note, the necessary money to pay for them, and had pledged them to the bank as collateral security for his note. In other words, Woodman had become the owner of the note and mortgage, and the trust company had parted with its title to and interest in them, before Woodman sold them to Bailey. In this condition of the title, Bailey sent his check to Woodman for the note and mortgage on January 27, 1893, Woodman assigned them back to the trust company, that company then assigned them directly to Bailey, and this latter assignment was recorded. The previous assignment to Woodman was not recorded, and Woodman never notified Bailey, and Bailey did not learn until years afterwards, that Woodman had ever owned the note and mortgage, or that the appellants had ever claimed that it was not valid. In 1894 he foreclosed the mortgage, and in November, 1895, he conveyed the property which it covered to his son, Charles Irving Bailey, by a quitclaim deed, which recites a consideration of $25,000. The record of this case discloses no evidence that the grantee in that deed was aware of any defect in the title, or of the claim of the appellants, before he paid the consideration for it; and there was no notice of any such claim upon the record of the title. In this state of the facts the court below dismissed the bill on the ground that the Baileys were bona fide purchasers for value, without notice of any defect in the mortgage or title.

A. E. Richards and Arthur M. Keith (John B. Baskin, A. G. Ronald, R. G. Evans, Charles T. Thompson, and Edwin K. Fairchild, on the brief), for appellants.

John Van Derlip (George P. Wilson, on the brief), for appellees.

Before CALDWELL, SANBORN, and THAYER, Circuit Judges.

SANBORN, Circuit Judge, after stating the facts as above, delivered the opinion of the court.

This case presents many interesting questions, but the answer to one of them necessarily determines its decision. It is admitted that the decree below should be affirmed unless the facts which we have recited charged Charles M. Bailey, under the law, with notice of the claim of the appellants that the mortgage was invalid on or before January 27, 1893, when he purchased and paid for it. The proof is conclusive that he had no actual notice of this claim, and that the

Digitized by Google

record title of the property mortgaged gave him no constructive notice of it; but the counsel for the appellants insist that the notice which Woodman had received while acting as an officer of the trust company was, under the law, notice to Bailey, because Woodman was Bailey's general agent to invest his money, and to examine his titles, and notice to the agent is notice to the principal. Notice to and the knowledge of the agent or attorney acquired in prior transactions, and present in his mind while he is exercising the powers and discharging the duties of his agency, are notice to and the knowledge of his principal. Railway Co. v. Belliwith, 28 C. C. A. 358, 83 Fed. 437, 440. For the purpose of this discussion we concede, without considering the issue, that knowledge of the appellants' claim had been acquired by Woodman in October, 1892, and was present in his mind when he sold the note and mortgage to Bailey. He entered upon the negotiation of that sale as the trust officer of the Metropolitan Trust Company, duly authorized to sell the mortgage for it, and also as the agent of Bailey to purchase mortgages, and to examine titles for him. Bailey, however, knew that he was an officer of the trust company, and that he was acting for that company in his attempt to sell this mortgage to him, and we concede, for the purposes of this case, that his consent that Woodman should act as agent for both these parties would estop him from escaping on that ground from the general rule that notice to the agent is notice to the principal. A principal who knows that his agent is also acting as agent for the party adversely interested in a transaction with him, and yet consents that he may act as his agent, is estopped from denying the notice and knowledge which the agent has during the negotiation. Astor v. Wells, 4 Wheat. 466; Fitzsimmons v. Express Co., 40 Ga. 330, 336; Alexander v. University, 57 Ind. 466, 476; Leekins v. Nordyke & Marmon Co., 66 Iowa, 471, 475, 24 N. W. 1; Mining Co. v. Senter, 26 Mich. 73, 77. But before the negotiation was closed, before Bailey bought or agreed to buy the mortgage, Woodman had become the sole owner of them, the trust company had parted with its title to them, and Bailey was kept in ignorance of this fact. Woodman had borrowed the money of the bank on his individual note to purchase the mortgage, and had paid this money over to the trust company. The note and mortgage had been assigned to him, and he had pledged them to the bank as collateral security for the payment of his note. It is doubtless true that the motive which induced him to take this action was to raise money for the company. But his purpose is not material here. The facts remain that before Bailey bought or agreed to buy the note and mortgage Woodman had become their owner; and when the agreement of sale was finally made, and when it was performed, he was the vendor, and Bailey was the purchaser, and Bailey was not informed of these facts. Now, the interest of vendor and purchaser are diametrically opposed. To the former the highest, and to the latter the lowest, price is the greatest good. To permit the seller to act as the agent of the buyer inaugurates so dangerous a conflict between self-interest and duty that the law has wisely removed the temptation by forbidding the relation. No man can be a vendor or the agent of a vendor and the

Digitized by Google

purchaser or the agent of the purchaser at the same time, unless he first obtains the consent of the party with whom he deals, after a complete disclosure of all the facts which condition his relation. The law absolutely prohibits the vendor from being at the same time the agent of a purchaser, unless the latter consents to the relation after he knows that his agent is the seller. Warren v. Burt, 7 C. C. A. 105, 107, 58 Fed. 101, 103, and 12 U. S. App. 591, 595; McKinley v. Williams, 20 C. C. A. 312, 74 Fed. 94, and 36 U. S. App. 749, 752. Every general agency is necessarily limited by this rule of law, and must be construed in its light. As long as the agent is conducting negotiations for his principal with third parties, he may act on his behalf; but the moment he undertakes, without the knowledge of his principal, to conduct them with himself, his agency ceases, and the powers and liabilities of that relation no longer exist. Voltz v. Blackmar, 64 N. Y. 440, 446.

In consonance with this principle of the law of agency, the rule that notice to the agent is notice to the principal has an exception as well established as the rule itself. It is that when the agent acts for himself, in his own interest, and adversely to his principal, in a given negotiation or transaction, neither notice to nor the knowledge of the agent can be lawfully imputed to the principal. Surety Co. v. Pauly, 170 U. S. 133, 156, 18 Sup. Ct. 552; Frenkel v. Hudson, 82 Ala. 158, 2 South. 758; Waite v. City of Santa Cruz, 89 Fed. 619, 630; Barnes v. Gaslight Co., 27 N. J. Eq. 33, 37; Winchester v. Railroad Co., 4 Md. 231, 241; Davis Improved Wrought Iron Wagon Wheel Co. v. Davis Wrought Iron Wagon Co., 20 Fed. 699, 702; Thomson-Houston Electric Co. v. Capital Electric Co., 56 Fed. 849, 853; Bank v. Cunningham, 24 Pick. 270, 276; Mechem, Ag. § 723. The reason of the general rule is that it is the duty of the agent to communicate to his principal the facts relative to any transaction in which he acts on his behalf, and that the law presumes that he has discharged his duty. But when the nominal agent commences to act in his own interest, and adversely to his principal, the presumption no longer obtains that he will communicate to him facts which might prevent the consummation of the negotiation which he is conducting on his own behalf, and the counter presumption that he will conceal them arises. As the reason for the rule no longer exists, the rule ceases to apply, and the exception prevails. The case at bar falls far within the exception. The time when notice of the appellants' claim that the mortgage was void became material, the time when that notice would naturally have been communicated to Bailey, was when it became the duty of Woodman to examine and certify the title for him. In the ordinary course of business that time did not arrive until Bailey agreed to take the mortgage, for it is useless and unusual to examine or certify the title for a purchaser until he has agreed to purchase if it is found to be good. Now, Bailey did not accept the terms of sale which Woodman offered him until January 27, 1893, and long before that time Woodman had become the owner of the note and mortgage, the vendor, and the party interested adversely to his former principal, in his negotiations for their sale; and he was conducting those negotiations in his own interest, and

Digitized by Google

not in the interest of Bailey. He had, therefore, ceased to be Bailey's agent, and his notice and knowledge of the appellants' claim cannot be lawfully imputed to his former principal. The presumption, which arises from his adverse interest, that he did not communicate his knowledge, is shown by the record to be in accordance with the fact. He never informed Bailey of the appellants' claim that the mortgage was void. He never notified him that he was the real owner and vendor of the note and mortgage which he caused the trust company to assign to him. All these material facts he concealed from his former principal, just as the law presumes from his adverse interest he would do; and in this way Bailey bought without either actual or constructive notice of any defect or claim of defect in the mortgage. There was no error in the conclusion of the court below that the Baileys were bona fide purchasers for value, without notice of the appellants' claim, and the decree below is affirmed.

(94 Fed. 262.)

CLARKE v. NORTHWESTERN MUT. LIFE INS. CO. et al.

(Circuit Court of Appeals, Eighth Circuit. April 17, 1899.)

No. 1,088.

1. FORECLOSURE SALE—REDEMPTION.
   Under Code Civ. Proc. Neb. § 497a (Comp. St. p. 595), providing for redemption by the owner of premises sold under foreclosure, the owner may redeem, where other than the plaintiff was purchaser, by paying the purchaser, or tendering into court before the confirmation of the sale, the amount of his bid, with 12 per cent. interest from the date of sale.
2. SAME—ANTICIPATING QUESTIONS AS TO EFFECT.
   It is not the business of courts to anticipate controversies, and it will not take jurisdiction of a petition of the owner of the equity of redemption asking leave to redeem from a foreclosure sale, and the advice and instruction of the court as to the effect of redemption, and the nature of the title that will accrue to the redemptioner.
3. SAME.
   Where the court entertains a petition of the owner of the equity of redemption asking leave to redeem from a foreclosure sale, it cannot pass on the question of the effect of the redemption, and the rights and title acquired by it.

Appeal from the Circuit Court of the United States for the District of Nebraska.

On the 31st of January, 1888, William E. and Mary A. Clarke made and delivered their promissory note for $6,500 to the Northwestern Mutual Life Insurance Company, and to secure the payment of the same, made and delivered to the insurance company their mortgage deed on the real estate here in controversy. On the 17th of January, 1896, Artemus M. Clarke, the appellant, purchased from the mortgagors, William E. and Mary A. Clarke, the legal title to the mortgaged premises, subject to the lien of the mortgage, but did not agree to pay the same. On the 21st of August, 1896, the insurance company filed its bill in equity to foreclose the mortgage in the circuit court of the United States for the district of Nebraska, in which suit Artemus M. Clarke, the appellant, and all other persons having an interest in the mortgaged premises, were made parties. In the foreclosure suit, the Merchants' National Bank of Omaha, the Nebraska National Bank of Omaha, and the

Digitized by Google

Nebraska Savings & Exchange Bank were made defendants, and filed answers setting forth the amount and nature of their respective liens on or interest in the land. On the 23d of December, 1896, the court rendered a decree in which the following were found to be the order and amount of the several liens on the land, namely: First lien, mortgage to Northwestern Mutual Life Insurance Company, $7,129.39; second lien, mortgage to Merchants' National Bank of Omaha, $8,062.70; third lien, judgment in favor of Nebraska Savings & Exchange Bank, $3,246.56. And it was decreed "that unless the defendant pay the complainant the said sum of $7,129.39, and interest thereon from the date hereof at the rate of seven per cent. per annum, together with the costs of this suit, within twenty days from the date hereof, said mortgaged premises be sold at public vendue, in the manner provided by law, to the highest and best bidder for cash, and, after confirmation of said sale by the court, the proceeds thereof applied—First, to the payment of the costs of this suit and expenses of sale; second, to the payment of the amount hereinbefore found due the complainant, and interest as aforesaid; third, to the payment of the amount hereinbefore found due the defendant Merchants' National Bank; fourth, to the payment of the amount hereinbefore found due the defendant William K. Potter, receiver of the Nebraska Savings & Exchange Bank,—and that the balance of the proceeds, if any, be brought into court to abide the further order of the court." The order of sale was stayed for nine months, after the expiration of which time, and on the 1st day of December, 1897, the mortgaged premises were sold under the decree, and purchased by the Merchants' National Bank of Omaha for $10,150. On the 30th of December, 1897, the appellant filed in the court below a petition for leave to redeem the mortgaged premises. After setting forth the purchase of the mortgagor's equity of redemption, the petition proceeds: "Your petitioner further says that as the owner of said real estate in said deed described, and which is the same real estate as that in controversy in this suit, your petitioner is ready, willing, and able, and now offers, to redeem said real estate from the lien of the decree herein, except that your petitioner is in doubt, and, although he has taken legal advice on the question, he is still in doubt, as to the amount to be paid, the effect of payment, and the nature of the title that will accrue to your petitioner as a result of said payment to redeem said property from the lien of said decree, and therefore your petitioner asks the advice and instruction of the court in that behalf. Nevertheless, your petitioner avers, upon information and belief, that the alleged purchaser at said sale has made no payment on its bid, and that your petitioner is entitled to redeem said premises from the liens of the parties hereto by paying the amount of the complainant's claim, with interest and costs. Wherefore your petitioner prays for an order adjudging and decreeing your petitioner to be the proper person, and entitled, to redeem said real estate from the lien of said decree, and determining the exact amount to be paid by your petitioner in order to redeem the same, and adjudging and decreeing that by so redeeming the same your petitioner will take title thereto free and clear from any right, interest, lien, claim, or demand whatsoever of the complainant, or of any of the defendants hereto, by reason or by virtue of any of the mortgage deeds, judgment liens, or other interests whatsoever of any of the parties to this suit, and that, upon so redeeming the same, the cloud cast upon the title to said real estate by the respective claims of the several parties to this suit may be removed, and that your petitioner may have such other and further relief in the premises as may be just and equitable." Upon consideration of this petition, the court entered the following decree: "It is therefore considered, adjudged, and decreed by the court that the said defendant, Artemus M. Clarke, be, and he is hereby, permitted to redeem said premises from said sale by paying to the complainant herein, Northwestern Mutual Life Insurance Company, the amount found due it in said decree, with interest, and all the costs of said suit, and by paying to the said Merchants' National Bank twelve per cent. interest upon the amount of its bid, from the date of said sale to the time of such payment, and that, upon redeeming said premises as aforesaid, the said Artemus M. Clarke take the same subject to the several liens of the several parties to this suit, except the complainant, and that, unless the said Artemus M. Clarke redeem said premises as aforesaid within five days from this date, then that said sale be and stand ratified, confirmed, and made absolute, and that a deed to the

Digitized by Google

premises so sold be made in the usual form, and delivered to said purchaser, according to the course and practice of this court, and the laws of the state of Nebraska in such case made and provided." From this decree Artemus M. Clarke, the petitioner, appealed to this court. The assignments of error are that the court erred in not decreeing that the appellant was entitled—"First, to redeem the premises from the sale by paying to the Merchants' National Bank, the purchaser, the amount of its bid, with twelve per cent. interest thereon from the date of the sale to the date of redemption; and, second, upon making such payment, that the appellant take the same title to said premises that the Merchants' National Bank would have taken if redemption had not been made, and the premises had been conveyed to the bank as purchaser at the foreclosure sale."

James H. McIntosh, for appellant.

George E. Prichett, for appellee Merchants' Nat. Bank.

Before CALDWELL, SANBORN, and THAYER, Circuit Judges.

CALDWELL, Circuit Judge (after stating the facts as above). If the appellant desired to redeem the premises in question, he should have paid the purchaser (who was not the plaintiff in the action) at the foreclosure sale, or into court before the confirmation of the sale, the amount of its bid, with 12 per cent. interest thereon from the date of the sale to the date of redemption. Code Civ. Proc. Neb. § 497a (Comp. St. p. 595); Swearingen v. Roberts, 12 Neb. 333, 11 N. W. 325. Instead of doing this, the appellant, without redeeming, or paying any sum to effect a redemption, or becoming bound to do so, filed a fishing petition, by which he sought to find out, before he made the redemption or parted with any money or incurred any liability, what rights he would acquire by making it. It seems highly probable that, unless he has the assurance in advance that his construction of the statute will prevail, he will not redeem. It is not the business of courts to anticipate controversies or try moot cases. The appellant had no right to delay the confirmation of the sale and the redemption, and keep the purchaser out of its title to the premises, or the money it paid for them, until it should be determined what he would get if he made the redemption, and whether it would be profitable to make it. The case is not one for a bill of interpleader; and the petitioner is not a trustee, and sustains no trust relation that entitles him to ask the advice and direction of a court of equity as to what he shall do in the premises. The lower court should have dismissed his petition. But it took jurisdiction of the same, and in so doing erred in fixing the amount which the appellant was required to pay to effect the redemption, by not following the rule prescribed by the supreme court of the state of Nebraska in Swearingen v. Roberts, supra, and in undertaking to determine the effect of the redemption upon the rights of the mortgagees and lienholders, whose mortgages and liens were prior in point of time to the acquisition by the appellant of the mortgagors' equity of redemption in the premises. We decide nothing more than that, in determining the amount necessary to effect redemption, the rule prescribed by the Nebraska statute, as construed by the supreme court of that state, should be followed, and that the effect of the redemption, and the rights acquired by making it, must be left to be determined when a case shall properly arise presenting those questions. As the appellant may have been misled by the

Digitized by Google

action of the lower court in the premises, the order of this court will be that the decree of the circuit court be reversed, and the cause remanded, with directions to that court to enter an order immediately upon the receipt of the mandate of this court giving the appellant the right to redeem, as he may be advised, within 10 days after the entry of such order. Ordered accordingly.

(94 Fed. 269.)

HUGULEY MFG. CO. et al. v. GALETON COTTON MILLS et al.

(Circuit Court of Appeals, Fifth Circuit. May 16, 1899.)

No. 798.

1. MORTGAGES—REVERSAL OF DECREE OF FORECLOSURE—RIGHTS OF MORTGAGEE IN POSSESSION AS PURCHASER.
   A mortgagee having a valid mortgage which is foreclosed in a court of competent jurisdiction, and who becomes the purchaser under the decree, and is given possession of the property, cannot be treated as a trespasser wrongfully in possession on a subsequent reversal of the decree, but is entitled on an accounting to the benefit of the equitable rules governing mortgagees in possession, and to have the rental value of the property during his possession applied on a deficiency remaining due him after its resale.
2. SAME—EFFECT OF STATE STATUTE.
   The right and obligation of a mortgagee in possession to apply rents and profits upon the mortgage debt is a doctrine of equity, and is not affected by a state statute providing that a mortgage is only security for a debt, and passes no title, as mortgages were always so regarded by courts of equity.

Appeal from the Circuit Court of the United States for the Northern District of Georgia.

W. R. Hammond and John M. Chilton, for appellant.
B. F. Abbott and P. H. Brewster, for appellee.

Before PARDEE, McCORMICK, and SHELBY, Circuit Judges.

SHELBY, Circuit Judge. On January 1, 1884, the Alabama & Georgia Manufacturing Company executed a mortgage or deed of trust to J. J. Robinson and two others to secure $65,000 of bonds issued by it that day. Subsequently the property embraced in the mortgage was sold under a decree of a state court subject to the mortgage. Under this sale the Huguley Manufacturing Company became the purchaser and owner of the property, subject to the incumbrance of the mortgage for $65,000. It was placed in possession of the property. A bill was filed in the circuit court of the United States for the Northern district of Georgia to foreclose the mortgage. a decree of foreclosure rendered, and on appeal to this court the decree was reversed. 13 U. S. App. 359, 6 C. C. A. 79, and 56 Fed. 690. The decree of foreclosure being vacated by reversal, the circuit court granted a petition on the part of the Huguley Manufacturing Company to restore it to the possession of the property, upon condition, however, that it pay into court $10,000, which had been paid by the purchasers under the now vacated foreclosure sale. This con-

Digitized by Google

dition the Huguley Manufacturing Company did not comply with, but resisted. It took another appeal to this court, and the decree of the circuit court was affirmed. 30 U. S. App. 683, 19 C. C. A. 152, and 72 Fed. 708.

At the first foreclosure sale the property was purchased for the bondholders, who organized a corporation under the name of the Galeton Cotton Mills. This corporation was placed in possession of the property under the first decree of foreclosure, and held the same pending the appeal, and after the reversal of the decree, and upon the second foreclosure became purchasers again, and have remained continuously in possession, operating the mills on the property. The Galeton Cotton Mills were in possession of the property under the first decree of foreclosure for a period of three years and eight months. The real controversy in the present litigation is about the rents of the property during this period. The net rents have been ascertained to be $28,334. At the last foreclosure sale a balance was left due, after applying the net purchase money to the mortgage debt, of $33,414.21. The Huguley Manufacturing Company contends that the possession of the purchasers at the foreclosure sale, the decree afterwards being reversed, was illegal and wrongful, and that in stating the account of reference the company was not to be treated as a mortgagee in possession, but that a stricter rule should be applied on the accounting, and that the rents are the property of the Huguley Manufacturing Company, and should be paid to it. The Galeton Mills, on the contrary, contends that its possession was not tortious, but legal, that it should be treated and charged only on the accounting as a mortgagee in possession, and that the net rents should not be paid to the Huguley Manufacturing Company, but should be applied to the payment of the amount left unpaid on the mortgage. These are the only substantial questions in the case. The material assignments of error relate either to the statement of the account before the master, or the application of the rents to the payment of the mortgage debt. We are relieved from stating these questions and the facts relating to them more minutely by the opinion of the learned judge who rendered the decrees appealed from in the circuit court. 89 Fed. 218–231.

1. The possession of the purchasers at the first foreclosure sale was not wrongful in the sense that such possession made them trespassers. The decree was rendered by a court having jurisdiction of the case. The mortgage foreclosed was valid. The decree was binding, and not subject to collateral attack. It was valid and effectual to place the purchasers in possession, and to protect them in possession till it was reversed. 2 Jones, Mortg. (5th Ed.) §§ 1587, 1588. It was reversed by this court, and the circuit court then granted an order of restitution, but upon condition that the Huguley Manufacturing Company would pay into court the sum of $10,000, which had been paid by the purchasers at the date of their purchase. This court, on appeal, affirmed this condition. The Huguley Manufacturing Company did not pay the $10,000, and so were not entitled to the possession by the terms of the order made by the circuit court and affirmed by this court. From its inception the possession in

Digitized by Google

question was sanctioned by a decree of the court having jurisdiction of the parties and the property. The reversal of the decree does not make the purchasers under it trespassers. The purchasers in this case, on the facts stated, are entitled to the benefit of the equitable rules governing mortgagees in possession, and the account should be stated and the rents applied by such rules. Dutcher v. Hobby, 86 Ga. 198, 12 S. E. 356; Brobst v. Brock, 10 Wall. 519; Lane v. Holmes, 55 Minn. 379, 57 N. W. 132; Townshend v. Thomson, 139 N. Y. 152, 34 N. E. 891.

2. Under the English law, which has been substantially adopted in many of the states, a mortgage on real estate is of dual nature. In a court of law the mortgagee is regarded as the owner. He possesses the legal title, and can recover the estate in ejectment. In a court of equity the mortgage is deemed only a security for the debt described in it. Welsh v. Phillips, 54 Ala. 309; 3 Pom. Eq. Jur. § 1184; 1 Jones, Mortg. (4th Ed.) § 11. In Georgia, as in several of the states, the English view does not prevail. The legal title does not pass to the mortgagee. The mortgage, both at law and in equity, is always deemed a mere security for debt. This was settled in Georgia many years ago by judicial decision. Davis v. Anderson, 1 Ga. 176; Vason v. Ball, 56 Ga. 269. It is now confirmed by statute. "A mortgage in this state is only security for a debt, and passes no title." Civ. Code Ga. § 2723. In the argument of this case it was urged with much earnestness that these decisions and the statute are controlling in this case, and that their proper application to the case will give to the appellant the rents and profits of the property. It must be conceded as established by authority, as a general principle, that a mortgagee in possession, whether in person, by trustee, or receiver, is in equity accountable for the rents and profits, "and must apply them to the reduction of the mortgage debt." 2 Jones, Mortg. (5th Ed.) § 1114. This is a matter exclusively of equity jurisdiction, and is for the benefit of the mortgagor. By such application of the rents his debt is paid or reduced so as to lessen the burden of redemption. It is also nothing more than is due to the mortgagee. He is entitled to be paid. In cases where the corpus of the property is not sufficient to pay the debt, and where the mortgagor is insolvent, the mortgagee has no other means of obtaining full payment except to secure the rents. As between an insolvent mortgagor and the mortgagee who has collected rents, the property mortgaged being insufficient to pay the debt, the rents must be applied to extinguish the debt. The mortgagee would not, in equity, be permitted to retain the rents, and not apply them to the debt. In no jurisdiction would he be required to pay the rents to the mortgagor, his debtor, and leave the debt unpaid. As the mortgagor, under such circumstances, could not prevent the rents being applied to the payment of his debt, he cannot, by selling his equity of redemption to another, invest him with a right he did not have himself. The purchaser of the mortgagor's right of redemption can have no greater rights than the mortgagor. In cases like this the equitable right of the mortgagee to apply the rents to the payment of his claim seems undisputed by the general practice and principles of equity

Digitized by Google

jurisprudence. This, we understand, if not conceded by the appellant, is not denied, but the contention is that these principles are not applicable to a mortgage controlled by the laws of Georgia. Is there anything in the Georgia law in conflict with these principles? Does the statute which makes a mortgage only a security for debt, intend to make it any less a security, in equity, than other mortgages on real estate? Under the English rule, a mortgage on real estate is in equity always regarded as a mere security for debt. It is only at law that the mortgagee is regarded as the owner of the legal title. The Georgia statute changes the effect, in this regard, of a mortgage at law, but it is only a legislative recognition of the equitable rule, which views a mortgage as merely a security for debt. It is held in Hart v. Respess, 89 Ga. 87, 14 S. E. 910, as stated in the syllabus:

"While the mortgagee has no legal title to the rents and profits, he has an equitable claim upon the same in so far as they may be needed to discharge so much of the mortgage debt as cannot be realized out of the corpus of the property, the facts of the case indicating that the debtors are insolvent, and the creditors likely to sustain loss."

The decree of the circuit court is affirmed.

(94 Fed. 274.)

MEARS v. LOCKHART.

(Circuit Court of Appeals, Eighth Circuit. April 10, 1899.)

No. 1,131.

1. APPEALS IN EQUITY—RECORD—FAILURE TO FILE PROOFS.
   The evidence taken in an equity cause in a federal court must be made a part of the record and certified on appeal, otherwise it will be disregarded: and, unless the record contains some evidence to sustain the finding, the decree will be reversed.
2. EQUITY PRACTICE—MANNER OF TAKING PROOFS.
   Testimony can only be taken orally before the court on the hearing of an equity cause "upon due notice given, as prescribed by previous order," in accordance with equity rule 67. It cannot be so taken on an ex parte order.

Appeal from the Circuit Court of the United States for the District of North Dakota.

E. Ashley Mears (W. H. Standish, on brief), for appellant.
John E. Greene (John F. Cowan, on brief), for appellee.

Before CALDWELL, SANBORN, and THAYER, Circuit Judges.

CALDWELL, Circuit Judge. Appellee filed his bill to remove a cloud from real estate, charging that appellant claimed some interest or estate in it adverse to appellee. An answer was filed, which, although very loosely drawn, and containing a great deal of irrelevant matter, set up some kind of an equitable title to the land in controversy. Exceptions were filed to the answer, which failed to allege as fully as is required by the rules of pleading prevailing in the federal courts in equity what claim he had; nor did he file the

Digitized by Google

evidence of his claim, or copies of them, as exhibits to the answer. The exceptions were not brought to a hearing. Appellee filed a replication to the answer. On December 6, 1897, counsel for appellee entered an order on the rule book setting the cause for hearing on December 14th. No notice, other than the entry of this order in the rule book, was given to the appellant, which was "for final hearing upon the bill, answer, and testimony, to be at that time taken orally before the court." On that day there was a hearing, and a decree in favor of the appellee. The decree recites:

"This cause came on for hearing at this time before the court, pursuant to the order setting the same down for hearing, plaintiff appearing by John F. Cowan, Esq., his attorney, and no appearance being made on behalf of defendants; and after hearing evidence and proofs adduced on behalf of plaintiff, and arguments of counsel, it is ordered * * *."

The record fails to show any of the evidence, except the contract or agreement under which appellant claims his equitable interest in the land, and which, in connection with the answer, show that he has an equitable interest therein; but there is nothing whatever in the record showing upon what evidence the court below rendered a decree in favor of the appellee. On appeal from a decree in equity the record must show some evidence to sustain the findings, otherwise the decree will be reversed. In the case at bar the record shows that appellant has an equity in the lands, and there is no evidence whatever showing that appellee has a better title, or any title which should prevail in a court of equity over that of the appellant under his contract.

The record shows that there was oral testimony introduced, presumably in pursuance of the order taken on December 6th, but there is no warrant of law for oral testimony to be taken at the hearing of a cause in equity on an ex parte order made by counsel. Section 862, Rev. St. U. S., provides that:

"The mode of proof in causes of equity and of admiralty and maritime jurisdiction shall be according to rules now or hereafter prescribed by the supreme court except as herein specially provided."

The supreme court, in pursuance of this statute, has adopted rules for the taking of testimony. The sixty-seventh equity rule provides the manner in which testimony may be taken. That rule does not permit testimony to be taken orally at the final hearing, except "upon due notice given as prescribed by previous order." When oral testimony is presented, it must be taken down and made part of the record, and upon appeal certified to this court; otherwise, it must be disregarded. Blease v. Garlington, 92 U. S. 1. In the case cited the whole subject is considered, and the proper practice settled. There being no evidence in the record to sustain the decree, it must be reversed, and the cause remanded, with leave to the parties to amend their pleadings as they may be advised, and to take proofs. Ordered accordingly.

Digitized by Google

(94 Fed. 275.)

CENTRAL TRUST CO. OF NEW YORK v. CHATTANOOGA, R. & C. R. CO. et al.

OWEN et al. v. JONES.

(Circuit Court of Appeals, Fifth Circuit. May 16, 1899.)

No. 784.

1. RAILROADS—MORTGAGE ON FUTURE-ACQUIRED PROPERTY—GENERAL LAWS.
There being in force a general law for the incorporation of railroads which authorizes the mortgage of future-acquired property, the fact that the original or amended charter of a railroad company does not authorize a mortgage of after-acquired property will not affect the right to execute such mortgage, as power in that respect is given under the general law, and the lien of such a mortgage will take precedence of the liens of subsequent judgments on such after-acquired property.

2. SAME—INCOME AFTER DEFAULT IN MORTGAGE—LOCAL LAWS AND DECISIONS.
Neither the local laws of Georgia nor the decisions of the supreme court of that state limit the security of a mortgagee to the corpus, to the exclusion of the income after default.

3. SAME—RENTS AND PROFITS—RECEIVER.
That a mortgage does not expressly include the income on the property mortgaged is not material, as the mortgagee can only be interested in the income on default, on which event, if the maker is insolvent and the security inadequate, he is entitled to the appointment of a receiver to preserve not only the corpus, but the rents and profits, for the satisfaction of the debt.

4. SAME—INSOLVENCY—INADEQUACY OF SECURITY—RECEIVER.
Where a railroad corporation is unable to pay its currently accruing interest, it is actually, as well as technically, insolvent, and its property inadequate security for its mortgage debt, and it may be put in the hands of a receiver.

5. SAME—MORTGAGES—RECEIVERS.
Under a railroad mortgage which expressly authorized a mortgagor to receive the income until default had been made for three months, whereupon the trustee could take possession of the road and operate the property until sale, or apply for a receiver, upon electing to ask for appointment of a receiver the right to the rents and profits inured to the mortgagee, subject to such terms as the court might impose, at the date of entry by the receiver.

Appeal from the Circuit Court of the United States for the Northern District of Georgia.

L. A. Dean and C. P. Goree, for appellants.

Alex. C. King, for appellee.

Before PARDEE, McCORMICK, and SHELBY, Circuit Judges.

McCORMICK, Circuit Judge. The Chattanooga, Rome & Columbus Railroad Company, by a different name, was chartered by an act of the legislature of the state of Georgia approved August 30, 1881. The company was given power to issue bonds in such amount as it desired, and to mortgage all of its railroad, right of way, rolling stock, and franchise for the purpose of securing its bonds. Laws Ga. 1880–81, p. 246, § 13. By an amendment approved December 22, 1886, it was provided that the company should have power and authority to issue income bonds, and to secure the same by a mort-

Digitized by Google

gage of its property and franchise, or by pledging the income of its railroad, either or both, as the company should deem proper. Laws 1886, p. 137, § 2. The company was authorized to construct a railroad from Chattanooga, Tenn., to Carrollton, Ga.,—a distance, by the route proposed, of about 140 miles. It began the construction of its road, placed a mortgage on that part of its property lying between Rome and Cedartown to secure an issue of bonds amounting to $150,000, but up to September 1, 1887, had only completed 20 miles of its railroad. On September 1, 1887, it executed the deed of trust foreclosed in this proceeding. This deed conveyed to the trustee all of the railroad constructed and to be constructed extending from Chattanooga, Tenn., to Carrollton, Ga., with all the rights of way, depot grounds, yards, terminal property and rights, and all such real and personal property as might be germane to and necessary for the construction, operation, and maintenance of its line of railroad, whether then owned and possessed by the mortgagor or thereafter to be acquired,—specifying exhaustively the materials necessary to be used in the construction, maintenance, and operation of the railroad, whether then owned and possessed by the mortgagor or thereafter to be acquired by it; also all the rights, powers, privileges, and franchises of, or belonging to, or thereafter to be acquired by, the mortgagor. This deed of trust was subject to the former mortgage as to so much of the property as that mortgage embraced. It was given to secure an issue of bonds amounting in the aggregate to the sum of $2,240,000. It provided that, in case of default for three months in the payment of any interest coupon when due, the principal of the bond to which the coupon was annexed should immediately become due; and if such default should be made in the payment of interest, and in the payment of principal thereby or otherwise matured, upon the written request of the holder of any bond or coupon the trustee was authorized, empowered, and directed to take and hold possession of the railroad and all its property, rights, etc., and to maintain and operate the same until the day of sale thereafter to be fixed, or, in its discretion, proceed by bill in equity or other appropriate proceeding in any court of competent jurisdiction, whether of the United States or of the state of Georgia, to foreclose the mortgage, and enforce the rights, liens, and securities of the trustee and bondholders thereunder. On September 2, 1887, the defendant railroad company (mortgagor) issued income bonds, and, to secure their payment according to their terms, executed and delivered to the same trustee a mortgage, covering the same property, declared to be subsequent and subordinate in all respects to the mortgage dated September 1, 1887, pledging as security for the payments stipulated to be made by the income bonds and coupons thereto attached the net earnings of the railroad, after providing for the interest on the $2,240,000 of first mortgage prior lien bonds. After the execution and delivery of these mortgages, the mortgagor company sold and conveyed all of its property, including the property covered by the mortgages, to the Savannah & Western Railroad Company, which last-named company came under the control of the Central Railroad & Banking Company of Georgia, all of whose

Digitized by Google

property was placed in the hands of receivers in March, 1892. On September 1, 1892, default was made in the payment of interest on the bonds secured by the mortgage of September 1, 1887, and on March 1, 1893, and on September 1, 1893, default was made in the payment of interest respectively maturing on those dates. On December 15, 1893, the trustee in the deed of trust exhibited its bill, with proper averments, asking for a foreclosure of its lien, a sale of the mortgaged property, and showing that the property was inadequate security for the debt, that the mortgagor and its assigns were insolvent, and praying that, pending foreclosure proceedings, the mortgaged property be taken possession of by a receiver to be appointed by the court, with such powers and authority as may be requisite to preserve the property until sale thereof, and to secure the earnings for the use of the bondholders. The appellee Eugene E. Jones was thereupon duly appointed receiver by an order passed February 1, 1894. He took possession of all of the railroad property, and operated it pending the progress of the foreclosure suit, under the customary orders in such cases. The decree of foreclosure and sale was passed July 12, 1894. It ascertained the amount due on the bonds at that date. It provided that the funds to be realized from the sale should be appropriated—First, to the payment of costs, including expenses and allowances indicated; second, to the payment of the principal and interest due and unpaid on the bonds secured by the mortgage of September 1, 1887; third, to the payment of the principal of the income bonds secured by the mortgage of date September 2, 1887; and, fourth, should there be any surplus remaining, after making the payments above directed, it was to be paid into the registry of the court to abide such order and decree as the court should make in respect thereto. For reasons which the record does not fully disclose, the sale was not made until some time in the early part of 1897. At the sale a reorganization committee became the purchaser. They complied with the terms of the sale, and the same was confirmed to them by a decree passed June 30, 1897. On September 25, 1897, the interveners filed their petition, showing that they were judgment creditors of the mortgagor company, whose judgments were obtained in the several state courts of Georgia prior to the filing of the bill by the Central Trust Company of New York to foreclose the mortgage. They claimed that, as such judgment creditors, they had a superior lien—First, on the proceeds of the sale of all of the road, except the 20 miles that had been constructed at the date of the mortgage; and, second, on the whole amount of the net earnings in the hands of the receiver acquired by him from his operation of the road pending the foreclosure proceedings. To this petition the receiver (appellee) demurred, on the ground that the lien of the mortgage attached to all of the proceeds of the sale of the railroad property and to the alleged income earned by the receiver, and was superior to the alleged lien of the petitioning creditors' judgments. On September 16, 1898, the circuit court passed its decree, sustaining the demurrer of the receiver, and dismissed the petition of the interveners. 89 Fed. 388. From that decree this appeal was taken.

Digitized by Google

The errors assigned are: (1) That the circuit court erred in holding that the mortgage is a valid lien upon the property acquired by the railroad company after the execution of the mortgage; (2) in holding that the mortgage creditors are entitled to the income earned by the receiver while operating the railroad; (3) in holding that the judgments are not liens on the after-acquired property and the incomes, superior to the mortgage lien. The appellants contend—First, that the defendant railroad corporation (mortgagor) had no authority, under its original or its amended charter, or the general laws of Georgia, to mortgage on September 1, 1887, any part of its railroad not then constructed, or any part of its equipment or other property which had not theretofore been acquired and was not then held by it; and, second, that the mortgagor company had no authority, under its charter or under the general laws of Georgia, to mortgage its income.

By the act of the legislature of the state of Georgia approved September 27, 1881, a general law for the incorporation of railroads, it is provided that future-acquired property may be mortgaged by railroad corporations formed under that act. Laws Ga. 1880–81, p. 160, § 9. The supreme court of Georgia, by a decision rendered on August 20, 1894, held:

"(1) There being in force a general law for the incorporation of railroad companies, if the subsequent special charters of the two railroad companies involved in this litigation were unconstitutional, and therefore wholly void, each of said companies was, nevertheless, a corporation de facto, and, as such, could acquire and own property, and would be bound to its creditors by all acts which would have bound it had it been duly incorporated under the general law. Bonds issued by it, and deeds or mortgages made to secure the same, are enforceable to the same extent as they would be if no special charter had been granted, and the company had been organized as a corporation in the method prescribed by the general law, and such bonds, deeds, and mortgages had been thereafter executed; and any person making claim upon the assets of one of these corporations de facto, whether as its own creditor directly, or as a creditor of such creditor or of a stockholder, sustains the same relation to it in respect to such claim as would be sustained under like circumstances were it a corporation de jure. (2) A corporation created under the general law of this state for incorporating railroad companies can bind by mortgage or trust deed, executed to secure bonds issued by it to provide funds for constructing its railroad, future-acquired property, as well as property owned by it at the time of the execution of the instrument. This being so, a corporation de facto can do the like." Georgia S. & F. R. Co. v. Mercantile Trust & Deposit Co., 94 Ga. 306, 21 S. E. 701.

In the opinion in the case just cited we find this language:

"If we have succeeded in showing that these railroad companies, supposing their special charters to be void, are de facto corporations, because of the existence of the general law, it would seem that they might make any contracts authorized by that law, and become bound by such contracts to those with whom the same were made. As a practical proposition, it is well known that most, if not all, of the railroads of any length in the United States which have been built for years past have been constructed by issuing in advance bonds upon their entire lines, including the unbuilt portions, as well as those already constructed, with mortgages to secure the bonds covering the whole. If a de facto railroad company is a corporation for any purpose at all, it ought, on general principles, to have the power to mortgage 'future-acquired property'; and this seems to be the doctrine very generally recognized by the courts."

Digitized by Google

On the authority of this decision of the supreme court of Georgia, the circuit court rightly held that the appellants' first contention is not well taken.

The appellants' second contention is that the deed of trust foreclosed in these proceedings does not purport, in express terms, to cover the income of the railroad property, and that, if it did, the mortgagor company had no authority to mortgage its income. It is earnestly insisted that the questions submitted by this contention depend upon the local law as declared by the statutes of Georgia and by the decisions of the supreme court of that state. We have examined with some care all the provisions of the statute law which seem to us to bear either directly or remotely upon these questions, and, in connection therewith, the decisions of the supreme court of Georgia to which we have been referred. We have considered with especial care and with deep interest the decision in Green v. Railroad Co., 24 S. E. 814, and the later decision in Railway Co. v. Barton, 28 S. E. 842. The authority of the decision first just above cited is stated thus by the court:

"By invoking equitable relief, such as the appointment of a receiver and the administration of the mortgaged property by equitable means and agencies, mortgagees submit themselves to do equity relatively to any creditor of the mortgagor who may rightly intervene in the foreclosure proceedings in which such relief is sought. Mortgages upon a railway, and the income from the same, the mortgagor being left in possession, are, as to the income, whether produced before or after the appointment of a receiver in foreclosure proceedings, subject to be postponed in equity in favor of a claim for damages resulting from a tort committed by the mortgagor while and by reason of operating the railway after the execution of the mortgage. The tort now in question consisting of negligence in running a train upon the railway, whereby damages accrued, and judgment therefor against the mortgagor having been obtained before the mortgages were foreclosed or the receiver was appointed, such damages, so reduced to judgment, should be regarded as operating expenses charged by the judgment upon income as against the mortgages and all their incidents. So long as such a charge is unsatisfied, the mortgagees cannot justly and equitably divert income from its payment, and take the benefit of such diversion, whether directly or indirectly."

This decision evidently does not purport to rest upon local law. It extends a little further than had hitherto been done the class of preferential claims which have been fully recognized generally by the courts since the decision in Fosdick v. Schall, 99 U. S. 235. There was manifested in the circuit courts of the United States a disposition to extend the doctrine of Fosdick v. Schall to a degree that has challenged the attention of the supreme court, and moved it to check this tendency, as appears from its utterances in Kneeland v. Loan Co., 10 Sup. Ct. 950, and subsequent cases. The fact that so many railroad corporations have issued bonds and mortgaged their property in advance of the construction of their railroads, and the acquisition of the property mortgaged, greatly beyond its market value at forced sale, had inclined courts of equity to treat the holders of railroad bonds, or the trustees in the mortgages, as the owners of the roads, rather than simply as lienholders, and to charge them as such owners, after default, with the unpaid expenses of operating the property. It has become the settled practice, where mortgagees invoke equitable relief and seek the ap-

Digitized by Google

pointment of a receiver and the administration of the mortgaged property by equitable means and agencies, to require them to permit payment of that large class of claims generally referred to as "preferential claims." The considerations which inspired the glowing argument of the distinguished jurist who wrote the opinion in the case of Green v. Railroad Co., supra, have touched the consciences of other chancellors. No exactly definite limits can be traced to include the class of claims which have generally been heretofore allowed as preferential. The warnings of the supreme court indicate that the bounds have been extended as far as sound judicial discretion can go, and that, if further relief is needed, it can be granted only by the legislature. The decisions of the supreme court of Georgia on which the appellants chiefly rely have been rendered since the execution of the mortgage here involved, and since the default, which by the terms of the mortgage terminated the right of the mortgagor to receive the income, and since the appointment of the receiver, who took possession of the property at the prayer of the mortgagee, to secure the earnings of the railroad to the use of the bondholders. We do not see in these decisions anything to control or qualify the settled doctrine that has obtained in the courts of the United States in such foreclosure proceedings as these. The appellants appear to regard as of the first importance the distinction between mortgages which, in express terms and with full warrant, are made to include the income of the property, and those which for want of power in the mortgagor, or a failure to exercise the power, do not expressly embrace the income. As far as we have been able to discover, such a distinction cannot rest on any provisions of the statute law of Georgia that are peculiar to that state, either in the language of those provisions or in the construction that has been placed on the language by its supreme court. The Civil Code of Georgia (section 2723) declares, "A mortgage in this state is only security for a debt, and passes no title." That rule is not peculiar to Georgia. It was the rule in equity from the beginning. In this country that rule is accepted by the courts of law. In some states, as in Georgia, it is expressed in a statutory provision; but, wherever thus found, it is only declaratory of the law already established by the dealings of the people and the decisions of the courts. This rule being established, it would seem to be immaterial whether or not the income is expressly named as included in the mortgage. When the mortgage does expressly include the income, the mortgagee can only claim his debt, principal and interest; and, while these are paid as they mature, he can have no cause of action on his mortgage for possession, or for account of rents and profits, or for any other account. He receives what is due him as it matures, and the mortgagor, or his assigns in possession, receive, and have a right to receive, the rents and profits. If default is made in the payment of interest, or of principal that has matured, the mortgagee has his right to foreclose according to the terms of the mortgage. If the corpus of the mortgaged property is ample security for the whole mortgage debt, the mort-

Digitized by Google

gagee has no need, even after default, to look to the income, or to an account of rents and profits, so long as the corpus is adequate security. When the mortgaged property is not of value sufficient to secure the payment of the mortgage debt, or when its sufficiency becomes substantially doubtful, and the mortgagor is insolvent, accruing interest matured and unpaid, like accruing taxes due and unpaid, takes the character of waste as clearly and distinctively as deteriorations by the cutting of timber, suffering dilapidation, etc.,—the leading illustrations from the earliest time in the adjudged cases and with text writers. In such cases courts of equity always have the power to take charge of the property by means of a receiver, and to preserve not only the corpus, but the rents and profits for the satisfaction of the debt. Kountze v. Hotel Co., 107 U. S. 378, 2 Sup. Ct. 911; Teal v. Walker, 111 U. S. 242, 4 Sup. Ct. 420.

The bill in this case shows that the mortgagor company and its assigns are insolvent, are unable to pay their debts and liabilities in full, and that the value of the property covered by the mortgage of September 1, 1887, is less in amount than the amount of the bonds issued under that mortgage, and is inadequate security for their payment. The result of the sale shows that after nearly three years' delay (during which the property was improved) the court, through its commissioner, succeeded in obtaining a bid for the mortgaged property as an entirety to an amount equal to not more than one-fifth of the mortgage debt at the date of the sale. It is true that such sales are not a reasonable test of the actual value of such property. It is, however, equally true that the conditions which generally affect such property have been found to render it not practicable to make a sale thereof in any other manner to any greater or to an equal advantage to all parties concerned therein. The practical result from these prevalent conditions is that, when a railroad corporation is unable to pay its currently accruing interest, it is actually, as well as technically, insolvent, and its property inadequate security for its mortgage debt. The larger part of the value of the property is dependent upon its continued operation as a public carrier. Its successful operation and ability to earn income are in most cases largely dependent on the railroad's connections, and its friendly relations with other carriers, and on the good will it has secured. And while the appointment of a receiver is not a matter of strict right, and such applications always call for the exercise of judicial discretion, these imminent conditions bearing upon such property, after default by the mortgagor in the payment of interest on the mortgage debt, give to an application for the appointment of a receiver great force, and the practice to grant the prayer therefor in such cases has become settled. We think it is quite equally well settled that the receiver takes and operates the property, subject to the preferential claims as stated in Fosdick v. Schall, and to liens prior in point of time to the date of the mortgage, for the benefit of the mortgagees, according to their priority. His possession is "that of the court, whose officer he is, and adds nothing

Digitized by Google

to the previously existing title of the mortgagees. He holds, pending the litigation, for the benefit of whomsoever in the end it shall be found to concern, and in the meantime the court proceeds to determine the rights of the parties upon the same principles it would if no change of possession had taken place." This is precisely what the circuit court did in this case. It has determined that the judgments, being junior to the mortgage in the date of their rendition, if entitled to a lien at all on the corpus of the mortgaged property, such lien is not superior to that of the mortgage. And the mortgage by its terms having limited the right of the mortgagor to remain in possession and receive rents and profits, and authorized the entry of the trustee either without or by the aid of a court of equity, the right to operate the road and receive its rents and profits, subject to such terms as the court of equity might impose, inured to the mortgagees at the date of the entry by the receiver.

We have seen that the mortgage does expressly provide that the mortgagor should receive the income until default had been made for three months in the payment of interest on the bonds, and that thereupon the trustee had the right to take possession and operate the mortgaged property until the sale to be thereafter fixed, or, at its discretion, to apply to a court of equity, as it elected to do, for the appointment of a receiver to take charge of the property, and operate the same until a sale should be made. We have seen, further, that in the issuance of its income bonds, and the mortgage given to secure the same, it provided that payment thereon should be made out of the net income of the road, after the interest on the bonds issued under the prior mortgage was duly paid. It seems clear to us that the circuit court did not err in holding that the lien of the mortgage was superior to the lien of the judgments, both as to the proceeds of the corpus of the property and as to the net income from the operation thereof while it was in the hands of the receiver. The decree of the circuit court is therefore affirmed.

(94 Fed. 283.)

YOUNG v. RAPIER.

(Circuit Court of Appeals, Fifth Circuit. May 9, 1899.)

No. 802.

1. COMMUNITY PROPERTY—RECOVERY FROM ESTATE OF FORMER HUSBAND.
   There can be no recovery of specific property, as part of the community, in an action by a divorced wife against the estate of her former husband, where it does not appear that the property is in the possession of, or in any wise claimed by, defendant.

2. SAME—INCREASE OF SEPARATE PROPERTY BY USE OF COMMUNITY FUNDS.
   To entitle a divorced wife to a share in the increased value of her husband's separate property caused by the expenditure of community funds, the amount of such expenditure must be shown.

3. SAME—FAILURE OF DIVORCED WIFE TO ACCEPT COMMUNITY.
   Where the only evidence that a divorced wife had accepted the community was that of a futile suit to have the divorce annulled, and a suit

Digitized by Google

to have her decreed the owner of an undivided one-half interest in property claimed to have been acquired during the community, commenced more than 20 years after the divorce, she will be presumed to have renounced the community, under Rev. Civ. Code La. art. 2420, providing that a divorced wife who has not accepted the community within the delays fixed is supposed to have renounced the same, unless she has within the term obtained a prolongation.

In Error to the Circuit Court of the United States for the Eastern District of Louisiana.

Mrs. Jennie Bronson (now the wife of Henry J. Young) was married to Alva M. Holbrook, in the city of New York, on the 25th day of June, 1864. Holbrook was domiciled in the city of New Orleans. On the 20th day of December, 1871, upon a petition filed in November of that year, a decree of divorce was pronounced in the Eighth district court for the parish of Orleans, dissolving the bond of matrimony theretofore existing between these persons. Holbrook married, subsequently, on the 18th day of May, 1872, Mrs. Eliza J. Poitevent. Holbrook died January 1, 1876, without issue; having by last will instituted his wife, Eliza J. Poitevent, as his sole heir, and appointed her testamentary executrix. The will was duly proved, and on January 22, 1876, Mrs. Poitevent was qualified as testamentary executrix, and directed to take an inventory; and on the 26th day of January, 1892, she was placed in full possession of all property and effects of said Holbrook, deceased. On the 28th day of June, 1878, Mrs. Poitevent, the widow of Holbrook, married George Nicholson. Of this marriage, two children were born. George Nicholson died. His heirs were sent into possession of his estate. Then Mrs. Nicholson died, and her heirs, Leonard and Yorke Nicholson, minors, were sent into the possession of her estate, through Thomas G. Rapier, their tutor, the defendant here. This suit is brought by Jennie Bronson (now Mrs. Young), claiming that there was certain real estate acquired during the community which existed between her and her husband A. M. Holbrook, and describing the same, and praying to be decreed the owner of an undivided one-half interest therein. She also claims a one-third interest in the Picayune newspaper plant, or $50,000, the value thereof, as gains during the existence of the community. The answer to the suit pleads the general denial, the dissolution of the community, that the property described in the petition was not community property of A. M. Holbrook and Jennie Bronson, and that Jennie Bronson, after the dissolution of the community of acquets and gains, had renounced any right therein that she may have acquired during the marriage. The defendant pleads that all the matters and things set up by the plaintiff have been passed upon in the state courts (setting out the suits by number and title), and that these suits had been finally decided against the plaintiff. Defendant then pleads the prescription of one, two, five, and ten years, and the staleness of the plaintiff's demand. The cause came on to be heard before Judge Boarman and a jury, and at the trial, after the plaintiff's evidence was all presented, upon motion of defendant's counsel the judge directed a verdict for the defendant, and upon that verdict is entered a judgment rejecting plaintiff's demand; and the plaintiff has sued out this writ. The first offer by the plaintiff was the judgment of the Eighth district court for the parish of Orleans, showing the judgment of divorce, which was dated December 20, 1871. The second offer is a certificate of marriage of the plaintiff with her present husband, Henry J. Young, dated September 20, 1884. The third offer was the proceedings in the supreme court of Louisiana in the suit of Jennie Bronson, praying for a decree annulling the judgment of divorce, which resulted in a judgment against her. In this connection is offered the printed report of the opinion and decree of the supreme court upon the petition of plaintiff, as found in 25 La. Ann. 51; also, opinion and decree in 32 La. Ann. 13. The next offers (4 to 7, inclusive) are copies of acts of sales of several properties to Alva M. Holbrook. They refer to property that was acquired by Holbrook many years prior to his marriage with Jennie Bronson. The properties described in the offers 8 and 9 relate to property acquired by Holbrook during his marriage with Jennie Bronson. The offer 10 (the record of the succession of Alva M. Holbrook) shows the last will and testament of Holbrook, the judgment of the court recognizing his widow

Digitized by Google

as his universal legatee, and the judgment of the court sending her into the possession of the estate. The offer 11 is the record of the proceedings in the matter of the Succession of Eliza J. Nicholson. The inventory in this estate shows the property possessed by Mrs. Nicholson at her death, and succinctly states the history of the title of such real estate as is therein described. In this inventory are mentioned two pieces of property which were acquired by Mrs. Nicholson of her husband A. M. Holbrook, but at the same time it shows that Holbrook acquired these properties long anterior to the marriage with Jennie Bronson. The plaintiff testified in her own behalf, among other things, as follows: "As to the amount of property possessed by A. M. Holbrook at the time of our marriage and domicile in New Orleans, and its value, I have no means of knowing, nor of what it consisted, except that we had real estate and personal property. On the 28th of November, 1871, as far as it is possible for me to state, the property, real and personal, had largely increased, as during the existence of our marriage he had acquired the interest of the various partners associated with him. This particularly applies to the real estate in the First district of the city of New Orleans, No. 66 Camp street, with improvements, and No. 19 Bank alley, also including buildings, also a two-thirds interest in the plant, good will, and business of a paper known as the New Orleans Picayune, published daily in the city of New Orleans, state of Louisiana, the value of which I am unable to state. I am unable to state the value of this property on March 10, 1873, but am certain it had not depreciated in value." The plaintiff having rested, the following bill of exceptions was taken: "Be it remembered that on this, the 11th day of January, 1899, this cause having been duly called for trial, counsel for both parties being present and expressing their readiness for trial, a jury was duly called, impaneled, and sworn to try the issues as presented by the pleadings; that thereupon the plaintiff offered in evidence, to support the allegations of her petition, the written and printed documents as hereinafter set forth and numbered, and of the tenor and in the words and figures as therein appear, and as herein made part, and hereto annexed. And same having been so offered, introduced, filed, and noted in evidence to the jury, and constituting the entire evidence presented in the cause, counsel for defendant thereupon, in open court, arose, and verbally requested the court to direct a verdict to be rendered by the jury, then and there, in favor of the defendant, upon the ground that said evidence did not make out a case for plaintiff; and thereupon the court, upon and under said motion, instructed the jury, in accord with said motion of counsel for the defendant, to render a verdict in the cause in favor of the defendant, which was then and there obeyed by the said jury, through its foreman, and the verdict was so written, rendered, signed, and recorded, and final judgment entered thereon, as appears by the record herein. To which said motion of counsel for the defendant, and to said order then and there given thereon, counsel for plaintiff, in presence of the jury, and before verdict, excepted, contending that, under all the evidence so presented, the plaintiff was entitled to a verdict as prayed for, and tendered this, his bill of exceptions, for the signature of the court, praying that it might be made part of the record herein, which is accordingly signed by the court." From the judgment rendered, plaintiff below sues out this writ, assigning errors as follows: "First. In the instructions of the court to the jury on motion of defendant, after all evidence for plaintiff had been offered, and its directing the jury, without any special reason being assigned, to find for the defendant; same being in words following, viz.: 'Gentlemen of the Jury: During your absence [considering the motion to direct a verdict] the court has concluded that the plaintiff has not made out a case sufficiently to authorize a verdict in her favor, even though what she alleges be true, and I am going to direct you to return a verdict for the defendant.' Second. In directing an entry of judgment dismissing plaintiff's cause, based upon the verdict rendered under instructions as aforesaid. Third. In that, the evidence being sufficient to warrant a verdict for plaintiff under the issues presented, the court erred in not submitting same to the jury, and directing a verdict for plaintiff, as prayed for. Fourth. In this: That all the evidence produced and adduced on the trial being presented by record and copies, pursuant to the ruling of this court, plaintiff was entitled to a judgment as prayed for. Fifth. In this: That the answer of defendant admits

Digitized by Google

(a) the marriage from which the cause of action arose; (b) its dissolution by judgment of court. Sixth. In this: That the evidence produced and offered shows (a) the property acquired by the husband and wife during the existence of the community; (b) the acceptance by the wife of said community on its dissolution; (c) the transmission of the entire property of said community to the defendant, with full notice; (d) the refusal of the husband, as well as of his successors, to account for or pay over to her the moiety of said community due her."

W. S. Benedict, for plaintiff in error.

John Clegg and Lamar C. Quintero, for defendant in error.

Before PARDEE, McCORMICK, and SHELBY, Circuit Judges.

Having stated the case, the opinion of the court was delivered by PARDEE, Circuit Judge.

The only bill of exceptions found in the transcript is irregular and insufficient. It recites that "the plaintiff offered in evidence, to support the allegations of her petition, written and printed documents as hereinafter set forth and numbered, and of the tenor and in the words and figures as therein appear, and as herein made part, and hereto annexed," while there are no documents thereafter set forth and numbered, and thereinafter appearing, or as thereinafter made part, or thereto annexed. In the transcript, preceding the bill of exceptions, is inserted, although making no part of the record proper, an alleged note of evidence, identified by no one; and, following the same, appear alleged copies of certain records and documents, no one of them identified in any respect. If a motion had been made to affirm the judgment of the circuit court because there was no sufficient bill of exceptions showing the ruling of the court complained of, we would have been inclined to take that course in disposing of the case.

A careful reading of the petition leads to the opinion that the suit is one to recover an undivided half interest in certain real estate described in the petition, and one third undivided interest in the Picayune plant; the same being claimed as belonging to the plaintiff, as the widow in the community of the late A. M. Holbrook. The theory of the case advanced by the learned counsel for the plaintiff in error is that the suit is one to recover an estate, to wit, the one undivided half of the community existing between the plaintiff and the late Alva M. Holbrook during their marriage. It is on this theory that the pleas of prescription interposed are sought to be avoided. It is very doubtful whether the suit, in any aspect, is on the right side of the docket. It seems to be a suit for the ascertainment of a community interest, where the plaintiff can only recover after a settlement and accounting. Taking the case, however, as presented, we are of opinion that the ruling of the trial judge directing the verdict in favor of the defendant was proper, because of insufficient evidence to warrant a verdict in favor of the plaintiff for any specific property or any specific sum. Neither of the two pieces of real estate which appear to have been acquired by A. M. Holbrook during his marriage with Jennie Bronson is shown to be now in the possession of, or to be in any wise claimed by, the defendant. There is no evidence in the record showing or tending to show that Eliza J. Poitevent, widow and testamentary executrix and universal legatee

Digitized by Google

of Alva M. Holbrook, ever came into the possession of either piece of said real estate. The plaintiff was certainly not entitled to recover from the present defendant an undivided half interest, or any interest, in either one of these pieces of property. The evidence in the record shows that the Picayune plant was acquired by A. M. Holbrook prior to his marriage with Jennie Bronson. This being the case, for the community interest existing between A. M. Holbrook and Jennie Bronson the latter could only claim the increased value of the same growing out of the expenditures of community assets, and on this subject the record is silent. The plaintiff herself testifies:

"As to the amount of property possessed by A. M. Holbrook at the time of our marriage, and its value, I have no means of knowing, nor of what it consisted, except that we had real estate and personal property."

Of course, all the real and personal property owned by A. M. Holbrook at the time of his marriage with Jennie Bronson formed no part of the community.

Aside from the failure to prove any interest sufficient to warrant a verdict, a conclusive reason why the plaintiff in error could not recover is the fact that, within the delay given by the law after the dissolution of the marriage, she did not accept the community, nor obtain a prolongation of the time for deliberation from the judge, and she is therefore conclusively presumed to have renounced the community.

Article 2411 of the Revised Civil Code of Louisiana provides as follows:

"The wife, who renounces, loses every sort of right to the effects of the partnership or community of gains. But she takes back all her effects, whether dotal or extradotal."

Article 2420 of the same Code also provides as follows:

"The wife, separated from bed and board, who has not within the delays above fixed, to begin from the separation finally pronounced, accepted the community, is supposed to have renounced the same; unless, being still within the term, she has obtained a prolongation from the judge, after the husband was heard, or after he was duly summoned."

These articles of the Code have been construed by the supreme court of the state in precisely similar cases. In Herman v. Theurer, 11 La. Ann. 70, it was held:

"Where the community is dissolved by the death of the husband, the surviving wife is presumed to have the intention to accept the community, and her right to renounce is subject to the same rules as govern the beneficiary heir. But a different rule prevails where a divorce has been pronounced. Unless the wife accepts the community within the delay allowed by law, or obtains from the judge a prolongation of that delay, she is supposed to have renounced the community. Civ. Code, art. 2389."

In Succession of Ewing v. Altmeyer, 15 La. Ann. 416, it was held:

"Where a marriage has been dissolved by a judgment of divorce, if either party brings suit to recover his or her share of the community property, it must be shown that he or she accepted the community within the legal delays after its dissolution by the sentence of divorce; otherwise, the pretensions are without foundation in law."

Digitized by Google

In Weller v. Von Hoven, 42 La. Ann. 602, 603, 7 South. 702, the question was further considered, and the court say:

"The exception is founded on article 2420, Rev. Civ. Code: 'The wife, separated from bed and board, who has not within the delays above fixed, to begin from the separation finally pronounced, accepted the community, is supposed to have renounced the same; unless, being still within the term, she has obtained a prolongation from the judge after the husband was heard, or after he was duly summoned.' It is shown, and is undisputed, that plaintiff did not accept within the term prescribed, and obtained no prolongation thereof from the judge. The above article is taken from article 1463 of the French Code, and its meaning and effect are conclusively settled by both our own and the French jurisprudence. It is universally held to mean that the failure of the wife separated from bed and board to accept the community, either expressly or tacitly, within the prescribed delay, operates a conclusive renunciation thereof, which is irrevocable, and which bars any subsequent acceptance or assertion of community rights."

In the instant case the record shows conclusively that the marriage between Alva M. Holbrook and Jennie Bronson was dissolved on the 15th day of December, 1871. There is no evidence to show, nor tending to show, that Jennie Bronson, the divorced wife, accepted the community at any time thereafter until the institution of this suit. The suit instituted in the state court (32 La. Ann. 13), and proved, was to obtain the nullity of the judgment decreeing a divorce and for alimony. That case seems to have been disposed of by the supreme court of the state of Louisiana in January, 1880, and adversely to the plaintiff in error, since which time, until the institution of this suit, no action appears to have been taken, accepting or renouncing the community. The judgment of the circuit court is affirmed.

(94 Fed. 288.)

KOHN et al. v. DRAVIS.

(Circuit Court of Appeals, Eighth Circuit. April 24, 1899.)

No. 1,130.

1. CHATTEL MORTGAGE—EXECUTION OF POWER OF SALE.
   A mortgagee who avails himself of the power of sale contained in the mortgage must strictly pursue its terms, and, when sufficient of the property has been thus sold to satisfy the debt secured and costs, there is an implied agreement that the remainder unsold shall be returned to the mortgagor.

2. SAME—COSTS OF SALE BY MORTGAGEE—ACTION FOR CONVERSION.
   In an action for conversion, by a mortgagor of a stock of goods against the mortgagee, where it appeared that defendant sold a part of the stock in the manner authorized by the mortgage, he is entitled to allowance for the costs of such sale, notwithstanding an unauthorized sale of the remainder.

3. SAME—CONVERSION OR UNAUTHORIZED SALE BY MORTGAGEE — MEASURE OF DAMAGES.
   The measure of a mortgagor's damages for conversion of the mortgaged property by the mortgagee, or its sale in violation of the terms of the mortgage, is the market value, at the time of such conversion or sale, of the portion that would have remained, after sufficient had been sold in the manner provided by the mortgage, to satisfy the mortgage debt and costs.

Digitized by Google

4. SAME.

Where a mortgage on a stock of goods authorized the mortgagee to sell at retail, at not less than cost price, until a sufficient amount was realized to pay the mortgage debt and costs of sale, but the mortgagee, after selling a portion of the goods at retail as provided, sold the remainder at auction, the mortgagor may, at his election, adopt as the basis for the assessment of his damages the market value of the goods which would have remained after satisfaction of the mortgage debt, had the mortgagee proceeded with the sale at retail, or the market value of all the goods not sold at retail, less the amount remaining due on the mortgage debt after the application thereon of the net proceeds of the portion so sold.

5. PARTIES—RIGHT TO BRING IN NEW PARTIES—IOWA STATUTE.

Under Code Iowa 1897, § 3466, which provides that, when a determination of the controversy between the parties before the court cannot be made without the presence of other parties, the court must order them to be brought in, a mortgagee of personal property, sued by the mortgagor for its conversion, has the right to have subsequent mortgagees brought in.

6. CONVERSION—ACTION BY MORTGAGOR—EFFECT OF SUBSEQUENT MORTGAGES.

The fact that a mortgagor of personal property has given subsequent mortgages on the same property, which are unsatisfied, is a defense pro tanto to an action brought by him against the first mortgagee for conversion of the mortgaged property.

In Error to the Circuit Court of the United States for the Northern District of Iowa.

On January 4, 1893, Theodore H. Dravis, the defendant in error, was a merchant in business at Sibley, in the state of Iowa. He had a stock of merchandise, whose cost price was $8,000. He mortgaged these goods to Kohn Bros., the plaintiffs in error, to secure the payment of $3,816 which he owed them. The mortgage contained a stipulation that "the mortgagee has permission to take immediate possession of such merchandise, and sell the same at retail only, but not at a price less than cost, and sufficient of such goods as will pay the debt hereby secured, with costs." The mortgagees took possession of the goods, and sold such a part of them as cost $3,500. They then sold the remainder at auction, and Dravis brought this action. In his petition he set forth the foregoing facts, and alleged that Kohn Bros., by accepting the mortgage, became the trustees of an express trust, that by selling at auction they had violated this trust, and prayed for a judgment for $8,234.90, the damages which he claimed he had sustained by their auction sale. Kohn Bros. answered that the defendant in error owed them $3,816 on January 4, 1893, that he gave them the mortgage to secure them the payment of this debt, and that they took possession of the stock of merchandise under it; but they denied all the other allegations of the petition. On the day before the case came on for trial in the court below, they filed an amendment to their answer, in which they averred that on January 4, 5, and 7, 1893, Dravis gave five subsequent mortgages, to five mortgagees, whom they named, on this same stock of merchandise, to secure the payment of debts which amounted to $5,122.88, that the aggregate amount of these several mortgages was greater than the value of the goods, that the subsequent mortgages were unpaid, that the mortgagees were entitled to enforce any claim which existed against the plaintiffs in error on account of their sale of the mortgaged property in their order of priority, and that the mortgagor had no interest in the property or its conversion. They prayed that the subsequent mortgagees might be made parties to the action, and might be required to state their respective claims under their mortgages. On the first day of the trial of the case, they made a motion in accordance with this prayer; but the court denied it, and struck from the files the amendment to their answer. On the trial the court refused to permit them to prove the market value of the goods, and instructed the jury to return a verdict against them for the cost price of the stock of merchandise, less the $3,816 and interest which was due to them on the original debt of Dravis and the costs of the sale. This instruction resulted in a judgment against the plaintiffs in error for $4,606.44, which this writ of error challenges.

Digitized by Google

Deloss C. Schull (William H. Farnsworth, James M. Flower, Frank J. Smith, and Harrison Musgrave, on brief), for plaintiffs in error.

George W. Argo and D. J. Murphy, for defendant in error.

Before CALDWELL, SANBORN, and THAYER, Circuit Judges.

SANBORN, Circuit Judge, after stating the facts, delivered the opinion of the court.

The mortgage authorized the plaintiffs in error to sell the merchandise at retail only, and at not less than cost, until they realized the amount due them and the cost of this sale. This limitation of the amount and the method of the sale raised the implied agreement that, when the limit of the sale had been reached, the unsold remainder of the goods should be returned to the mortgagor. Those who avail themselves of the power of sale in a mortgage must strictly pursue its terms. By accepting the mortgage, and the benefit of the power it contained, these mortgagees agreed that they would sell the stock of goods in accordance with its terms until they realized their claim, and that they would return the unsold remnant to the mortgagor. They violated this contract. After they had sold at retail such a part of these goods as cost $3,500, they sold the remainder at auction. What is the proper measure of the mortgagor's damages for this breach of the agreement? The court below held that it was the cost price of the entire stock mortgaged, less the amount due on the debt of the mortgagor and the costs of the sale, and this ruling is assigned as error.

If the plaintiffs in error had bought these goods at the cost price, or if they had agreed to pay the cost price for them, that price would have been the measure of the mortgagor's damages for the violation of that contract. Wicker v. Hoppock, 6 Wall. 94, 99, 100. But they made no such agreement. The extent of their contract was that they would sell from their stock at retail and at cost until they obtained proceeds enough to pay the costs of such a sale and the debt of the mortgagor to them, and that they would return the remainder of the goods to him. What, then, would the mortgagor have received if they had fulfilled their agreement? Evidently, the unsold remnant of the stock, after a sufficient amount had been sold from it to pay his debt and the costs of the sale,—nothing more, and nothing less. What, then, was the real and entire effect of the breach of the agreement upon the rights of the mortgagor? It was that the mortgagees sold at auction, and thus converted to their own use, the unsold remnant of the mortgaged stock which they had agreed to return to him. They had the right to apply all the stock, except this remainder, to the payment of the debt and costs, by the terms of the mortgage; and, if the mortgagor received the benefit of this entire remnant, he could not suffer any loss by the method which the mortgagees adopted in disposing of their part of the property. If Kohn Bros. had agreed to buy this remnant at its cost price; if they had agreed to pay its cost price, at any time or in any way; if they had even contracted to sell it at its cost price,—they might have been

Digitized by Google

liable to the mortgagor for that amount. But the limit of their undertaking here was that they would return this remainder of the goods to the mortgagor, and this was the only stipulation of the contract which was violated to his prejudice. They failed to return this remnant, and they converted it to their own use; but the measure of their liability could not exceed its market value at the time of its conversion, because the mortgagor could not have obtained more than that amount for it if it had been returned to him. The difference between that which the injured party would have received if the contract had been performed, and that which he did receive, is the true standard for the measure of damages for a breach of a contract, because that measure gives the sufferer that full and exact compensation for his injury which it is the aim of the law to bestow. Kingman & Co. v. Western Mfg. Co., 34 C. C. A. 489, 92 Fed. 486. The mortgagor in the case at bar would have received the remnant of his stock of goods, after a sufficient amount had been sold from it at retail and at cost to pay his debt and the costs of the sale, if the contract had been performed. By the breach of the agreement he lost nothing but this remnant, and the mortgagees converted this to their own use by their sale of it at public auction. The measure of damages for the conversion of personal property or for the sale of mortgaged personal property in violation of the terms of the mortgage is the market value of the property at the time of the conversion or sale. Gravel v. Clough, 81 Iowa, 272, 276, 46 N. W. 1092; Coad v. Cattle Co., 32 Neb. 761, 49 N. W. 757; Wygal v. Bigelow, 42 Kan. 477, 22 Pac. 612; Cushing v. Seymour, 30 Minn. 301, 306, 15 N. W. 249; Coe v. Cassidy, 72 N. Y. 133, 138; Denny v. Faulkner, 22 Kan. 75, 83; Thew v. Miller, 73 Iowa, 743, 747, 37 N. W. 771. The result is that the court below fell into an error in measuring the mortgagor's damages by the cost price of the stock, less his debt to the mortgagees, and in refusing to permit the latter to prove the market value of the remnant of the stock which they agreed to return; and the case must be tried again.

In view of the second trial, we remark that we have considered the question of damages in the belief that an estimate of them on the basis of the market value of the remnant which would have remained if the mortgagees had proceeded with the sale at retail until they had realized their claim and costs will yield a larger amount to the mortgagor than the amount of the proceeds of the actual sale at retail, and the market value of the goods which they did not actually sell in this way, less the costs of the sale at retail and the amount of the mortgagor's debt and interest. Since the mortgagees did not complete the sale at retail, we have no doubt that the mortgagor may choose either of these bases for the assessment of his damages which he thinks will be the more advantageous to him. Botsford v. Murphy, 47 Mich. 536, 537, 11 N. W. 375, 376.

This case presents another question. The plaintiffs in error filed an amendment to their answer the day before the trial, in which they pleaded that within a few days after their mortgage was

Digitized by Google

made, and long before the auction sale of the property, the mortgagor made five mortgages upon this stock of goods to secure debts which amounted to more than $5,000, that these debts were unpaid, and that the property was not worth as much as the aggregate amount of the mortgages upon it. On the next day they moved the court to make the subsequent mortgagees parties to the action, but the court denied the motion and struck out the amendment. It is unnecessary to consider here whether or not this amendment and motion were made in time, because there will be ample opportunity before the next trial of the case to present them upon their merits. There is no doubt that one of the subsequent mortgagees, whose debt is unpaid, can maintain an action against the plaintiffs in error for the conversion of the property and the destruction of his lien, and can recover any damages which he has sustained thereby. If the mortgagor may also obtain a judgment against these mortgagees for the entire difference between the value of the mortgaged property and his debt to the plaintiffs in error, they are in danger of a double liability for the same wrong. Section 3466 of the Code of Iowa of 1897 provides:

"The court may determine any controversy before it, when it can be done without prejudice to the rights of others, or by saving their rights; but when a determination of the controversy between the parties before the court cannot be made without the presence of the other parties, it must order them to be brought in."

The defendant in error bases his right to recover in this case on the ground that Kohn Bros. were the trustees of an express trust, and he was the beneficiary. He alleges in his petition that—

"By accepting said mortgage, and taking possession of the goods and property described therein, the said defendants became, were, and are trustees of an express trust, and that the plaintiff is the beneficiary; * * * that the defendants have violated their trust, and, by selling said goods for less than the cost price thereof, the plaintiff has been greatly damaged, in the sum of $8,234.90."

An answer that, under assignments or mortgages, third parties claim and appear to be the only beneficiaries of this trust, clearly shows the existence of a controversy that cannot be determined between the parties to this action. No adjudication of the question thus presented between Kohn Bros. and Dravis would protect the former against the claims of the subsequent mortgagees for the same damages which Dravis is seeking to recover. In Kennedy v. Moore, 91 Iowa, 39, 43, 58 N. W. 1066, the assignee of a note and mortgage brought a suit to collect the note and to foreclose the mortgage. The defendant answered that the mortgagee claimed to own them, and moved, under the statute we have cited, that he be made a party. The supreme court of Iowa held that, since the mortgagee claimed an interest in the note and mortgage, the motion should have been granted. In Evans v. Harvester Works, 63 Iowa, 204, 18 N. W. 881, a sheriff seized exempt mortgaged personal property on an attachment against the mortgagor, and the attaching creditor gave a bond of indemnity. The mortgagor brought an action on the bond, and the creditor pleaded

Digitized by Google

the mortgage as a defense. The court held that the mortgage did not deprive the mortgagor of his cause of action and said:

"The difficulty in the case at bar, if there is any, arises from the fact that the mortgagee, if deprived of his security by the defendants, has a right of action. The defendants should not, of course, be subjected to a double liability. If the mortgagee has been deprived of his security, he should properly be joined with the mortgagor as co-plaintiff. It is the mortgagee's right to demand that he be brought in."

And the court cited the section of the statutes which we have quoted.

While the subsequent mortgagees cannot be said to be indispensable parties to this action, we are of the opinion that under this statute the plaintiffs in error are entitled to have them brought in, unless their joinder will oust the jurisdiction of the court as to the parties before it, or unless they are incapable of being made parties, by reason of their absence from the jurisdiction of the court, or otherwise. Donovan v. Campion, 29 C. C. A. 30, 31, 85 Fed. 71, 72, 56 U. S. App. 388, 390. In reaching this conclusion, we have not overlooked the contention of the defendant in error that the causes of action which the subsequent mortgagees once had against Kohn Bros. have been barred by the statute of limitations, but we cannot undertake to consider or determine that question in the absence of pleading and proof upon the subject. Of course, if those claims are barred, the subsequent mortgagees have no interest in the controversy, and they should not be made parties to this action, but the question whether or not their claims have fallen within the statute of limitations must be left for the court below to determine.

Finally, we are at a loss to find any sound reason why the existence of subsequent liens upon converted mortgaged property is not a good defense pro tanto to the claim of the mortgagor. He is entitled to recover no more than he has lost. If he had no beneficial interest in the property at the time of its conversion, he has really lost nothing thereby, and he ought not to recover anything. If he had assigned to another his interest in the mortgaged property before it was converted, that fact would have been a complete defense to his action. If he had assigned one-half or one-third of his interest in it, that fact would have reduced the amount of his recovery one-half or one-third; and if he has placed liens upon it by means of mortgages which gave their holders the right to take and sell the property, and to apply its proceeds to the payment of their claims, it is not perceived why that fact should not have a similar effect. One who has mortgaged his property for its value may have the right to redeem it, or a naked legal title to it, but he has no substantial valuable interest in it. If it is converted or destroyed, the direct loss falls, not upon him, but upon the mortgagees, and they have their action against the wrongdoer for their damages. If the mortgagor loses at all, it is only indirectly, when he is compelled to pay the mortgage debts, and is deprived of the mortgaged property which he might have used for that purpose. If, however, he never pays the debts, he loses nothing, and

Digitized by Google

consequently he should recover nothing. In an action by a mortgagor against a mortgagee for the conversion of the mortgaged property, or for a sale of it in violation of the terms of the mortgage, he can recover only the value of his interest or equity in it; and that is the market value of the property, less the aggregate sum of the liens upon it at the time of the conversion. Torp v. Gulseth, 37 Minn. 135, 33 N. W. 550; Roberts v. Kain, 6 Rob. (N. Y.) 354, 358; Cobbey, Chat. Mortg. § 1036. The judgment below is reversed, and the case is remanded to the court below, with instructions to grant a new trial.

(94 Fed. 300.)

CASE v. HALL.

(Circuit Court of Appeals, Eighth Circuit. April 17, 1899.)

No. 1,134.

1. APPEAL—DEFECTIVE VERDICT — NECESSITY OF OBJECTION IN TRIAL COURT.
   An objection to the sufficiency of a verdict cannot be urged in an appellate court, where the bill of exceptions does not show that the defect was called to the attention of the trial court, and proper exception taken to its action thereon.
2. SAME—REVIEW OF INSTRUCTIONS—FAILURE TO BRING INTO RECORD.
   The charge of a trial court is no part of the record, and cannot be noticed on appeal, unless brought into the record by the bill of exceptions, and without such charge before the court the refusal to give instructions requested cannot be reviewed.
3. SAME—BILL OF EXCEPTIONS—ADDING MATTERS BY STIPULATION.
   Neither testimony nor instructions can be added to a bill of exceptions, after it is signed and filed, by stipulation of counsel in the appellate court.

In Error to the United States Court of Appeals in the Indian Territory.

Ben Hall, the defendant in error, brought an action of unlawful detainer against George W. Case, the plaintiff in error, in the United States court in the Indian Territory, to recover the possession of three tracts of land, the same being portions of a larger tract containing some 600 acres. The complaint alleged, in substance, that on March 14, 1894, Hall rented to Case a certain farm and improvements thereon, five miles south of Nowata, in the Indian Territory, containing 600 acres, more or less, and known as the "Ben Hall Place," together with the dwelling houses, outhouses, barns, etc., thereon, for the term of five years; that Case entered into possession of the premises, and complied with the terms of the contract of lease, and paid his rent as therein agreed for the years 1894 and 1895 and until the 1st day of March, 1896; that on the latter day he refused to pay any more rent, and laid claim as owner to three parcels of the 600-acre tract, one of said parcels containing 135 acres of land situated in the northwest corner of the tract, together with the dwelling house, outhouses, etc., another parcel consisting of 45 acres of land situated in the south part of the 600-acre tract, and the third parcel consisting of a two-room log house, with the grounds appurtenant thereto, which was situated on the north side of the tract. In view of the premises, the plaintiff below demanded a judgment for the immediate possession of the three parcels of land last aforesaid, which were alleged to be unlawfully withheld by the defendant. The suit appears to have been instituted on April 20, 1896. For an answer to the complaint, the defendant admitted that he had failed to pay rent as charged in the complaint, and he further admitted that he had laid claim as owner to the three parcels of land forming a part of the 600-acre tract, which were men-

Digitized by Google

tioned in the complaint. He alleged that these three parcels of land and the improvements thereon had been sold to him by the plaintiff, and that the plaintiff was not entitled to the possession thereof. The trial at nisi prius resulted in a verdict and judgment for the plaintiff below. The defendant appealed to the United States court of appeals in the Indian Territory, where the judgment at nisi prius was affirmed. Case v. Hall (Ind. T.) 46 S. W. 180. From that court the record was removed to this court by a writ of error.

W. H. Kornegay, for plaintiff in error.
Preston S. Davis, for defendant in error.

Before CALDWELL, SANBORN, and THAYER, Circuit Judges.

THAYER, Circuit Judge, after stating the case as above, delivered the opinion of the court.

It is urged in this court as one ground for reversal that the verdict which was returned in the trial court was not in the proper form, and does not adequately describe the premises which were found to have been unlawfully detained. The verdict was as follows:

"We, the jury, find the issue for the plaintiff, and assess his damage, in being kept out of possession of the premises, at $300. And possession of entire farm in ten days from date. Foreman: W. W. Miller."

The defendant below insists that the jury should have returned a verdict of guilty or not guilty, and should have assessed the plaintiff's damages incident to the unlawful detention, if the finding was in his favor. In support of that contention, sections 3362–3365 and 3367 of Mansfield's Digest of the Statutes of Arkansas are cited. It is unnecessary, however, to consider this contention, since the bill of exceptions which was settled and signed by the trial judge does not show that any objections were made to the verdict when it was returned. The verdict was clearly sufficient, in the light of the pleadings, to show what the jury intended, and to warrant the judgment which was subsequently entered thereon, wherein the property referred to was sufficiently described to identify it. If the verdict was not in the statutory form, the trial court's attention should have been directed to the defect when it was returned, and an exception to the court's action in refusing to have it corrected, if the court did so refuse, should have been taken at the time, and the exception should have been properly preserved in the bill of exceptions. As the bill of exceptions contains no record of any such action having been taken by the defendant's counsel, the error complained of cannot be noticed by this court.

The other errors that have been assigned, to which our attention is directed in the briefs, each relate to the instructions which are said to have been either given or refused by the trial judge, but they cannot be noticed by this court for the following reasons: None of the instructions that are said to have been given by the trial court are contained in the bill of exceptions which was settled and signed by the trial judge, and for that reason they form no part of the record. Neither does the bill of exceptions, as settled and signed, contain a direction that the charge of the court be inserted therein.

It is well established that the charge of the trial judge is no part of the record, and cannot be noticed on appeal, unless it is made a

Digitized by Google

part thereof by a bill of exceptions, properly signed and filed. Dietz v. Lymer, 19 U. S. App. 663, 667, 10 C. C. A. 71, and 61 Fed. 792; Jefferson City v. Opel, 67 Mo. 394, and cases there cited. One instruction is contained in the bill of exceptions, the same being an instruction that is said to have been refused by the trial court; but whether an error was committed in refusing it can only be determined by consulting the entire charge of the trial court. It may be that the instruction contained in the bill of exceptions which was refused was not given because embraced, in substance, in other portions of the charge, and it will be presumed in aid of the judgment that such was the fact. It appears from the record that counsel filed a stipulation in the court of appeals in the Indian Territory shortly before the hearing of the case on appeal in that court, consenting that certain so-termed "instructions" which were set out in the stipulation might be referred to in that court as the instructions which were given by the trial judge. It has been held, however, that neither testimony nor other matters can be added to a bill of exceptions, after it is signed and filed, by stipulation of counsel alone. Wessels v. Beeman, 66 Mich. 343, 33 N. W. 510. The general rule is that neither counsel nor the court to which an appeal is taken have any power to change the record made by the trial court, and that defects or omissions therein can be cured only with the approval of the latter court. Cluck v. State, 40 Ind. 263. The case in hand is not one where a clerk, in certifying a record to an appellate court, has inadvertently omitted something which was in fact contained in the bill of exceptions as settled by the trial judge, but it is a case where an attempt is made in an appellate tribunal to insert something in the bill of exceptions which is really no part thereof, because it was never made a part thereof by the trial court. If counsel, by stipulation, can change the record without the sanction of the trial judge, they may thus present any moot question to an appellate court. We cannot, therefore, regard the stipulation which was filed in the United States court of appeals in the Indian Territory, after the record had been removed thereto, and the term of the trial court had expired, as being effectual to change or alter the record of the trial court, from the standpoint from which that record must be viewed by this tribunal. As the bill of exceptions does not contain the charge of the trial judge duly certified by him, we must presume, in aid of the judgment, that the charge was correct. The judgment of the United States court of appeals in the Indian Territory, and the judgment of the United States court for the Northern district of the Indian Territory, are therefore affirmed.

Digitized by Google

(94 Fed. 310.)

FIRST NAT. BANK OF ARKANSAS CITY v. LEECH.

(Circuit Court of Appeals, Eighth Circuit. April 10, 1899.)

No. 1,140.

ACCORD AND SATISFACTION—EXECUTORY AGREEMENT.

An agreement to accept notes of a third person in part payment of a debt, and to extend the time for payment of the remainder, on the giving of certain security, must be fully executed before it can be pleaded as an accord and satisfaction.

In Error to the Circuit Court of the United States for the District of Kansas.

This is an action to recover the amounts due defendant in error from the plaintiff in error on two certificates of deposit. The defenses are that the bank having been placed in the hands of a receiver, plaintiff agreed with the bank, in writing, to accept in payment of his claims 10 per cent. in money, and certificates of deposit for the balance, payable in 10 installments, at intervals of three months, at 4 per cent. per annum; that afterwards, it having been ascertained that the bank would be unable to carry out these agreements, the plaintiff agreed with defendant to accept in payment of his claims a note for $4,500 of one of the bank's debtors, to be secured by a mortgage on real estate of that debtor, and also by mortgage on three lots belonging to the bank, to be selected by the plaintiff from a large list of lots to be submitted to him, and the balance due the plaintiff was to be paid in 10 equal installments, at intervals of three months. There are no allegations of satisfaction or acceptance of the agreement, and upon the trial the court held the answer set up no defense, and sustained a demurrer to it, and directed a verdict for the plaintiff for the full amount of his claims. The contention of the plaintiff in error is that the court erred in sustaining the demurrer to the answer, and in refusing to permit the introduction of evidence to support its allegations.

Peters & Nicholson and Pollock & Lafferty, for plaintiff in error.

Stanley, Vermillion & Evans and Mathews, Heade & Mathews, for defendant in error.

Before CALDWELL, SANBORN, and THAYER, Circuit Judges.

CALDWELL, Circuit Judge. The agreements set up in the answer amount to nothing more than an executory contract for an accord. There are no allegations showing a satisfaction. It is a well-settled rule of law that accord without satisfaction is not a good answer. An agreement or accord which is to operate as a satisfaction of an existing liability must, before it can have that effect, be fully executed. It is not enough that there be a clear agreement or accord and a sufficient consideration; but the agreement or accord must be executed before it can be pleaded as an accord and satisfaction. If part of the consideration agreed on be not performed, the whole accord fails. City of Memphis v. Brown, 20 Wall. 289, 308, 309; Clifton v. Litchfield, 106 Mass. 34, 40, 41; Crow v. Lumber Co., 16 C. C. A. 127, 69 Fed. 61; Coblentz v. Manufacturing Co., 40 Ark. 180; Ogilvie v. Hallam, 58 Iowa, 714, 12 N. W. 730; 1 Smith, Lead. Cas. (5th Am. Ed.) 445, 446, and cases there cited.

The answer must allege that the matter was accepted in satisfaction. Sinard v. Patterson, 3 Blackf. 354; Banking Co. v. Van Vorst's Adm'x, 21 N. J. Law, 101. Mere readiness to perform the accord or

Digitized by Google

a tender of the performance will not do, and a plea of accord and tender is bad upon demurrer. Russell v. Lytle, 6 Wend. 390; Hawley v. Foote, 19 Wend. 516; Tilton v. Alcott, 16 Barb. 599; Clifton v. Litchfield, supra. In the latter case the supreme judicial court of Massachusetts say:

"But an executory agreement to discharge such a demand, upon the giving of a promissory note by the debtor, or payment of a sum less than the amount actually due, is not binding upon the creditor, and cannot be enforced against him or set up in bar of a suit upon the demand; and therefore the mere offer of such note, or of such less sum in payment, will not operate to discharge the debt, unless it is accepted by the creditor. His refusal to accept it is the breach only of an executory agreement without consideration. The whole transaction will then stand as an accord without satisfaction."

That the agreement in this case was merely executory is not controverted. It is alleged that the lots of the bank which were to be added to the security were to be selected by the defendant in error from a list of property owned by the defendant; but there is no allegation that these lots were ever selected, although it is charged that a large list of the bank's lots were tendered to defendant in error for a selection. As there was no satisfaction, the answer setting up accord and satisfaction, without averring satisfaction, was bad, and the court did not err in directing a verdict for the plaintiff. The judgment of the circuit court is affirmed.

(94 Fed. 312.)

COLORADO EASTERN RY. CO. v. UNION PAC. RY. CO.

(Circuit Court of Appeals, Eighth Circuit. April 10, 1899.)

No. 1,121.

1. DISMISSAL FOR WANT OF PROSECUTION—REVIEW.
   An order of dismissal for want of prosecution, with judgment for costs, is a final judgment, from which an appeal will lie.
2. APPEAL AND ERROR—FINALITY OF JUDGMENT.
   To constitute a final judgment for purpose of appeal it is not essential that it should be a bar to another suit.
3. WANT OF PROSECUTION—DISMISSAL.
   Dismissal of cause for want of prosecution is within the discretion of the court, even in the absence of a rule permitting it.
4. SAME.
   Where nearly six years had elapsed since the filing of the original petition without steps to bring cause to trial, during which time plaintiff had twice filed petitions praying that suit be not dismissed for want of prosecution, alleging the pendency of other suits involving the matter in dispute, and such suits were finally disposed of, and no further steps were taken in the cause until two years later, when defendant filed petition to dismiss for want of prosecution, the court did not abuse its discretion in granting the application.
5. CONDEMNATION PROCEEDINGS—NATURE AS SUIT.
   A proceeding for condemnation of right of way is a suit, so as to authorize the court to dismiss it for want of prosecution.

In Error to the Circuit Court of the United States for the District of Colorado.

Digitized by Google

Application for dismissal for want of prosecution. Granted, and plaintiff brings error. Affirmed.

The plaintiff in error filed its petition in the state court of Colorado for condemnation of a right of way. The original petition was filed on September 12, 1892, and the cause was removed to the federal court by defendant in error on October 14, 1892. The transcript of the record was filed on November 1, 1892. No action was had on the petition until October 4, 1894, when the plaintiff in error filed a petition asking that the suit be not dismissed under the rule of the circuit court for the district of Colorado, which provides that all suits in which no progress has been made during the preceding year should be dismissed, setting up that at the time there were pending in the supreme court of the United States and the court of appeals of Colorado suits to determine the question of the right of plaintiff in error to condemn the land in dispute. Nothing further was done in the cause until April 29, 1896, when another petition was filed by the plaintiff in error praying the court not to dismiss the proceeding, assigning the same reasons as were set up in the petition filed October 4, 1894. The cause pending in the United States supreme court was finally disposed of November 20, 1895, and the one in the Colorado court of appeals in October, 1896. No further steps were taken in the cause until June 29, 1898, when the defendant in error filed a petition to dismiss the suit for failure to prosecute. To this motion a reply was filed, and on July 5, 1898, the same came on for hearing, whereupon the court dismissed the cause "for failure duly to prosecute the same," and rendered judgment for costs against the plaintiff in error.

Lucius M. Cuthbert (Henry T. Rogers and Daniel B. Ellis, on brief), for plaintiff in error.

Willard Teller (Harper M. Orahood, on brief), for defendant in error.

Before CALDWELL, SANBORN, and THAYER, Circuit Judges.

CALDWELL, Circuit Judge (after stating the facts). The defendant in error moves to dismiss the writ of error upon the ground that the dismissal of a cause for want of prosecution is not subject to review by an appellate court. The motion must be denied. An order of dismissal for want of prosecution and a judgment for costs against plaintiff is a final judgment from which an appeal will lie. Tunnel Co. v. Pell, 4 Colo. 184; Wood v. Coman, 56 Ala. 283; Dowling v. Polack, 18 Cal. 626. To constitute a final judgment, it is not essential that it should be a bar to another suit. It is only when a suit is determined on its merits that it is a bar to another action. Hughes v. U. S., 4 Wall. 232. The court below has promulgated the following rule:

"All causes at law and in equity in which no order or progress has been made and entered of record within one year last past shall be dismissed for want of prosecution, unless upon cause shown during the first twenty days of the May term the court shall otherwise order."

This is a very proper rule, but, in the absence of such a rule, every court has the power to dismiss a cause for want of prosecution. It is a matter of judicial discretion, and is frequently exercised. Ashley v. May, 5 Ark. 408; Peralta v. Mariea, 3 Cal. 185. There is no ground whatever for claiming that this discretion was abused or arbitrarily exercised in this case. Nearly six years had elapsed since the filing of the original petition without any steps being taken by the plaintiff to bring the cause to trial. The contention that a pro-

Digitized by Google

ceeding for condemnation is not a suit is fully disposed of by the decision in Boom Co. v. Patterson, 98 U. S. 403, where it is held that it is a suit and removable to the federal courts when the necessary diverse citizenship exists, or, as in the case at bar, one of the parties is a federal corporation. The judgment of the circuit court is affirmed.

(94 Fed. 314.)

LIVERPOOL & LONDON & GLOBE INS. CO. v. KEARNEY et al.

(Circuit Court of Appeals, Eighth Circuit. April 10, 1899.)

No. 1,127.

1. INSURANCE—CONSTRUCTION OF POLICY—IRON SAFE CLAUSE.

By a clause in a policy of insurance on a stock of merchandise the insured agreed to keep the books containing a record of his business, together with his last inventory, "securely locked in a fireproof safe at night, * * * or in some secure place not exposed to a fire which would destroy the house where such business is carried on." *Held*, that such clause gave the insured an option to keep the books either in a safe or some other secure place, which option he might exercise at any time, and was not violated by the removal of the books in the night from the safe to a place of safety outside on the approach of a fire to the building, such removal being but an act of prudence; nor did the accidental loss of the inventory during such removal preclude a recovery on the policy.

2. SAME.

A provision of an iron-safe clause in a policy of insurance on merchandise, which, in addition to requiring the insured to keep his books and inventory in a safe or other secure place at night, makes the policy void in the event that he shall fail to produce such books and inventory in case of loss, must be given a reasonable, and not a strictly literal, construction; and, so construed, in connection with the provision for the manner in which the books and inventory shall be kept to insure their safety, it requires the insured to produce them after the fire, if within his power to do so, and casts upon him the responsibility for their loss in all cases where such loss is due to a wrongful or fraudulent act on his part, or to his culpable negligence.

Sanborn, Circuit Judge, dissenting.

In Error to the United States Court of Appeals in the Indian Territory.

This suit is founded on two insurance policies, one for $2,500 and one for $1,000, which were issued by the Liverpool & London & Globe Insurance Company, the plaintiff in error, to T. K. Kearney and J. W. Wyse, composing the firm of Kearney & Wyse, the defendants in error. The policies covered a stock of hardware located in the town of Ardmore, in the Indian Territory, which was destroyed by fire on the morning of April 19, 1895, during the life of the policies. For a defense to the claim made under the policies the defendant company appears to have relied altogether on the following provision of the policy, termed "the iron-safe clause": "The assured under this policy hereby covenants and agrees to keep a set of books showing a complete record of business transactions, including all purchases and sales, both for cash and credit, together with the last inventory of said business; and further covenants and agrees to keep such books and inventory securely locked in a fireproof safe at night, and at all times when the store mentioned in the within policy is not actually open for business, or in some secure place not exposed to a fire which would destroy the house where such business is carried on; and in case of loss the assured agrees and covenants to produce such books and

Digitized by Google

inventory, and, in the event of a failure to produce the same, this policy shall be deemed null and void, and no suit or action at law shall be maintained thereon for any such loss." Noncompliance with this clause was alleged in the defendant's answer, in that the insured did not keep books showing a complete record of their transactions, including all purchases or sales for cash and credit, nor any inventory of said business, or memorandum, securely locked in a fireproof safe at night, or in some secure place not exposed to fire; and in that they did not furnish to the insurer, as a part of their proof of loss, a record of their transactions,—that is, of the sales for cash or credit, or purchases,—or an inventory of their business. There was a verdict and a judgment at nisi prius in favor of the plaintiffs below, which judgment was affirmed by the court of appeals in the Indian Territory. 46 S. W. 414. The defendant below brought the case here on a writ of error.

A. B. Quinton (E. S. Quinton, W. A. Ledbetter, and S. T. Bledsoe, on brief), for plaintiff in error.

A. C. Cruce (W. B. Johnson, W. I. Cruce, and Lee Cruce, on brief), for defendant in error.

Before CALDWELL, SANBORN, and THAYER, Circuit Judges.

THAYER, Circuit Judge, after stating the case as above, delivered the opinion of the court.

The defendant below, against whom the judgment was rendered, assigns several errors in the proceedings of the trial court, but each assignment presents only some special phase of the same general question, namely, whether the trial court properly construed and gave due effect to the "iron-safe clause" of the policy, above quoted in the statement. Concerning the facts of the case there is practically no dispute. On the night of April 18, 1895, between the hours of 1 and 3 a. m., a fire accidentally broke out in a livery stable in the town of Ardmore, which was about 300 yards distant from the plaintiffs' place of business. Efforts to arrest the progress of the conflagration failed, and when it had approached so near to the plaintiffs' place of business that the windows of their store were cracking from the heat, and the building was about to take fire, one of the plaintiffs entered the building for the purpose of removing the books of the firm to a safer place, thinking that it would be better to remove them than to take the chances of their being destroyed by fire. He opened an iron safe in the store, in which they had been deposited for the night, which was called a fireproof safe, and took them therefrom, and to his residence, some distance away. The books consisted of a ledger, a cash book, a day book or blotter, and a small paper-covered book containing an inventory that the firm had taken of their stock on or about January 1, 1895. In the hurry and confusion incident to the removal of the books, the inventory was either left in the safe, and was destroyed, or was otherwise lost, and could not be produced after the fire. The other books, however, were saved, and were exhibited to the insurer after the fire, and were subsequently produced as exhibits on the trial. There was neither plea nor proof that the loss of the inventory was due to fraud or bad faith on the part of the plaintiffs, or either of them. The trial judge charged the jury that the set of books which had been kept, and which were produced on the trial, "were substantially

Digitized by Google

in compliance with the terms of the policy upon that subject," and no exception was taken by the defendant to this part of the charge. The books, though used at the trial as exhibits, do not form a part of the record. For these reasons no question arises as to the sufficiency of the set of books that was kept which we are called upon to consider. It must be taken for granted that it was a proper set of books, as the trial court held. The only substantial ground for complaint seems to be that the inventory was not produced. Does the fact that the inventory was lost under the circumstances aforesaid, and was not produced, vitiate the policies? It will be observed, from reading the "iron-safe clause," that the plaintiffs below did not bind themselves unconditionally to keep their books in a fireproof safe at night, and at all times when the store was not actually open for business. Their engagement was to so keep them, "or in some secure place not exposed to a fire which would destroy the house where such business is carried on." They had an option, therefore, either to keep them in a fireproof safe, or in some other secure place, where they would not be liable to be destroyed by a fire which might destroy their place of business. We perceive no reason why the plaintiffs were not entitled to exercise this option of removing their books to some other safe place at any time, and to exercise it, especially when a conflagration was sweeping towards their place of business, which bid fair to destroy it, and possibly to destroy their books as well, though contained in a safe. It cannot be said, we think, that, having placed the books in the safe on the night of April 18, 1895, at the close of business, they were bound to let them remain there until morning, no matter what might occur, and that in the meantime they lost the right given by the policy to remove and keep them elsewhere. The option was a continuing one, and it was eminently proper, we think, for the plaintiffs to exercise it during the night of the fire, when it became obvious to them that their place of business was about to be destroyed. They acted prudently, doing what any other man of ordinary caution would have done if he entertained lurking doubts as to the fireproof quality of his safe, or was unwilling to have his books buried perhaps for days under a mass of débris.

Counsel for the defendant company direct our attention, however, to the last paragraph of the "iron-safe clause," and urge, in substance, that the stipulation therein contained bound the plaintiffs, in any event, to produce the inventory after the fire; and that, even though it was lost, and cannot be produced, they are not entitled to recover. This argument proceeds upon the theory that the last paragraph of the "iron-safe clause" must be read literally, that it admits of no exceptions or qualifications, and that the failure to produce the books or inventory for any reason vitiates the policies. We cannot assent to this view of the case. Like all contracts made between private parties, and like all statutes, for that matter, they must receive a reasonable interpretation which will not work injustice or lead to absurd consequences. U. S. v. Kirby, 7 Wall. 482; Heydenfeldt v. Mining Co., 93 U. S. 634; Church of Holy Trinity v. U. S., 143 U. S. 457, 460, 461, 12 Sup. Ct. 511; Scott v. Latimer, 33 C. C. A. 1, 89

Digitized by Google

Fed. 843; Thurber v. Miller, 14 C. C. A. 432, 67 Fed. 371, and 32 U. S. App. 209; Davis v. Bohle, 92 Fed. 325.[1] If it had been the intention of the defendant company that the final paragraph of the "iron-safe clause" should be construed as it now claims, then we perceive no motive for inserting the preceding clause, which required the insured to keep his books in a fireproof safe, or other secure place; and that clause might as well have been omitted, giving him the power to keep his books where he pleased, and making his right to recover dependent upon the actual production of his books, and throwing upon him in all cases the responsibility for their production. Again, the construction contended for by the insurer might at times require the insured to produce his books when, without any fault on his part, it would be physically impossible to do so. For example, if a burglar should blow open a safe containing books, and start a fire which should destroy the insured's books as well as his stock in trade, then he could not recover on a policy containing the "iron-safe clause" construed as we are asked to construe it. Nor could a person insured under such a policy recover against the insurer if he kept his books in a safe which he had every reason to believe was invulnerable against heat, provided it turned out not to be so, and his books were destroyed by an accidental fire. These considerations lead us to conclude that the last paragraph of the "iron-safe clause" should not be read literally, and that neither party to the contract intended that it would be so read. It should be construed, we think, as requiring the insured to produce his books and inventory after a fire, if it is within his power to do so, and as throwing upon the insured the responsibility for the loss of his books and inability to produce them in all of those cases where their loss is due to a wrongful or fraudulent act on his part, or to his culpable negligence. In the case at bar we cannot say that there was any evidence tending to show that the inventory was lost, and not produced for either of the aforesaid reasons. The plaintiffs appear to have exercised their right under the policy to remove the books to a more secure place, under circumstances which fully justified their conduct, and we do not find any evidence which tends to convict them of culpable negligence in the manner of exercising that right. In conclusion we shall only add that the clause of the policy now under consideration has been construed by other courts in cases where the facts were only slightly variant from those disclosed by the present record, and the conclusions reached touching the proper interpretation of the clause are in substantial conformity with those which we have announced, and with the instructions which were given by the trial judge. Jones v. Insurance Co., 38 Fed. 19, 21; Brown v. Insurance Co., 89 Tex. 590, 35 S. W. 1060; McNutt v. Insurance Co. (Tenn. Ch. App.) 45 S. W. 61; Insurance Co. v. Parker, 61 Ark. 207, 213, 32 S. W. 507. The judgment of the United States court of appeals in the Indian Territory and of the United States court for the Southern district of the Indian Territory are therefore affirmed.

[1] 34 C. C. A. 372.

Digitized by Google

SANBORN, Circuit Judge (dissenting). Is opening a fireproof safe in one's place of business in which a book is securely locked, and either taking the book out and losing it, or leaving it in an open safe so that it is burned up by an approaching fire which destroys the building in which it is situated, the performance of an agreement to keep the book "securely locked in a fireproof safe, * * * or in some secure place, not exposed to a fire which would destroy the house where such business is carried on"? The opinion of the majority answers this question in the affirmative. I have been unable to resist the conclusion that it should be answered in the negative. The book certainly was not kept securely locked in a safe, nor was it kept "in some secure place not exposed to a fire which would destroy the house where such business is carried on." On the other hand, the safe was unlocked, and the book was either lost or was actually exposed in the open safe or elsewhere to the fire which burned the house where the business was conducted, and was thereby destroyed. Is losing a book keeping it? Is exposing it to a fire by which it is destroyed keeping it in some secure place not exposed to that fire? It is said that the insured had the option to keep the book securely locked in the safe, or in some secure place not exposed to a fire which would destroy the business house, that this was a continuing option, and that they complied with their contract if they lost the book in transit in the night while they were attempting to exercise this option, and to take it from the safe to another secure place. But is this argument sound? The contract was that "at night, and at all times when the store mentioned in the within policy is not actually open for business," they would keep the book locked in the safe, or in some secure place not exposed to a fire which would burn the building in which the safe was situated. It was that they would keep the book in one of two secure places during all of every night while the store was closed. It was not that they would keep it in one of those places, or in transit between them. They undoubtedly had the right each day to choose in which place they would keep their book during the coming night, but, after the night had come, and after the store was closed, if they took the book from the place which they had selected, and exposed it to the fire against which they had agreed to guard it, I see no escape from the conclusion that they violated their contract, because they no longer kept it in either of the secure places specified; and this, whether they removed it with the intention of transferring it from one place to the other or with some other purpose. They were not keeping it in either place while they were transferring it from one to the other. The contention of the majority here proves too much. If the insured could exercise their option once during the night, and after the store was closed, and expose the book to the danger of fire, they could exercise it many times, and could thus keep the book continually in transit, and in neither of the safe places where they agreed to have it during the entire night. In my opinion, an agreement to keep an article in one of two specified secure places during certain hours of the night is not performed by losing it in transit between them during those hours.

There is another proposition of the majority to which I cannot yield

Digitized by Google

assent. It is that an agreement to safely keep and to produce a book upon the trial of a lawsuit is not broken by a failure to keep and produce it, unless that failure is due to a wrongful or fraudulent act, or to the culpable negligence of the defaulter. The agreement of the insured here was as clear and unambiguous as the English language could make it. It was that they would keep the inventory securely locked in the safe, or in the other secure place specified, each night; that they would produce it in case of a loss under the policy, and that, if they failed to do so, no action upon the policy should be maintained. They failed to keep it in either of the places named in the agreement, and they failed to produce it. It is said, however, that they never meant to agree to keep it or produce it; that they only intended to contract that they would not by any wrongful or fraudulent act or by any culpable negligence of theirs fail to keep and produce the book; that the contract should be construed according to this latter intention; and that, as the insurance company failed to prove any such fraudulent act or culpable negligence of the insured, there was no evidence of a breach of the agreement, although the defendants in error utterly failed to do the acts which, by the plain terms of the written contract, they agreed to perform. But there is no evidence of the intention of the parties to this contract except the policy itself. The policy contains no agreement that the defendants in error will not be guilty of fraudulent or wrongful acts or of culpable negligence in their care of the book. It nowhere mentions these terms, or makes any reference to the subjects which they suggest. It is only a bald, plain contract to keep the book in one of the places specified, and to produce it. The terms of this agreement seem to me too plain for construction. In my opinion, they bring these cases under the familiar rules that, "where the parties have deliberately put their engagements into writing in such terms as to import a legal obligation without any uncertainty as to the object or extent of such an engagement, it is conclusively presumed that the whole engagement of the parties, and the manner and extent of their undertaking, was reduced to writing" (Thompson v. Libby, 34 Minn. 374, 377, 26 N. W. 1; Barnes v. Railway Co., 4 C. C. A. 199, 54 Fed. 87, and 12 U. S. App. 1, 7; Wilson v. Ranch Co., 20 C. C. A. 244, 73 Fed. 994, and 36 U. S. App. 634, 643), and that "contracts of insurance, like other contracts, are to be construed according to the sense and meaning of the terms which the parties have used, and, if they are clear and unambiguous, their terms are to be taken and understood in their plain, ordinary and popular sense" (Imperial Fire Ins. Co. v. Coos Co., 151 U. S. 452, 463, 14 Sup. Ct. 379; Fred J. Kiesel & Co. v. Sun Ins. Office of London, 31 C. C. A. 515, 88 Fed. 246). Under these rules I am unable to find anything in this contract to indicate that the parties to it intended to make any other agreement than that which it so clearly expressed. Would it be any defense to an action upon an absolute promise to pay a debt that the debtor only intended to agree that he would not be guilty of any fraudulent act or culpable negligence which would prevent him from paying it, and that he had not been? Would it be the province of the court, in the absence of other evidence, to construe a contract to build a house, to dig a well, to sell

Digitized by Google

a horse, or to do any other act, into an agreement not to commit any fraudulent act or culpable negligence which would prevent the performance of the contract? The rule that courts may not make new contracts for parties which they never considered, and to which their minds never assented, answers these questions. The same rule seems to me to apply to an unconditional agreement to keep in a specified place, and to produce, a book. I can find in such a contract no evidence that the parties to it intended to make any other agreement. I am unable to see in it any proof that they intended that the insured should not agree to keep and produce the book, but that they should merely contract not to commit any fraudulent act or culpable negligence that would prevent them from keeping and producing it. The latter contract seems to me to be in the teeth of the former. It destroys the written agreement, and I cannot persuade myself, in the face of its plain terms, that the minds of these parties ever met on a contract to so effectually abrogate it.

If this is the correct view of the meaning of this contract, it is immaterial whether its breach was caused by mistake, carelessness, from culpable negligence, or by an honest purpose to violate the agreement. By the terms of the agreement the insured voluntarily took upon themselves the chances of the effects of their own imprudence, carelessness, purpose, and performance. The record conclusively shows that their failure to perform their contract was not caused by any act of God or the public enemy, or by the interposition of any force which made it impossible for them to fulfill it. The breach is therefore without legal excuse, and its inevitable consequence follows. The agreement was that no action should be maintained upon the policies if the book was not kept and produced. It is conceded on all hands that it was not kept, and that it was not produced; and, in my opinion, the insured were estopped by their agreement and by this fact from maintaining any action upon the policy. This view of the meaning and effect of the "iron-safe clause" of policies of insurance is sustained by the following authorities, which hold that it is "an express promissory warranty in the nature of a condition precedent," and that a strict compliance with its terms is indispensable to a recovery upon a policy which contains it: Assurance Co. v. Altheimer, 58 Ark. 565, 575, 25 S. W. 1067; Insurance Co. v. Parker, 61 Ark. 207, 215, 32 S. W. 507; Kelley-Goodfellow Shoe Co. v. Liberty Ins. Co. (Tex. Civ. App.) 28 S. W. 1027, 1031; American Fire Ins. Co. v. First Nat. Bank (Tex. Civ. App.) 30 S. W. 384, 385; Ostr. Ins. § 238; and Landmann v. Insurance Co., 18 Ins. Law J. (La.) 813, 815, in which the court pertinently said:

"In this case there is no room for interpretation or construction. The language used in expressing the clause is free from ambiguity. It is printed in large type, annexed to the face of, and is clearly a part of, the policy. Its purpose was to enable the company, in case of loss, to procure satisfactory evidence of the extent of the loss, to protect it against unfounded augmentation of the value of the property destroyed, and to enable it to obtain other evidence than that of the assured and his employés, however honest and correct they may be, of the damage sustained. Its purpose was, also, to enable the assured to make his loss mathematically certain, and protect him against unfounded deductions. It was the plain intention of the parties that in the case of loss the books were to be the basis of the adjustment, and to enable

Digitized by Google

them to be produced it was made a part of the policy that they should be kept in an iron safe. This the assured promised to do. The iron-safe clause in the policy is a promissory warranty. Being a warranty,—a part of the contract,—it is in the nature of a condition precedent to a right of recovery, and the parties whose rights are dependent upon such a condition must show they have performed it. 'Agreements legally entered into have the effect of laws on those who have formed them.' Rev. Civ. Code, art. 1901. The court cannot add to or detract from the laws they have made for themselves, or say that the promissory warranty shall not be enforced because it is not material. It is enough that the parties agreed to it, however foolish, improvident, or immaterial it may be."

(95 Fed. 208.)

BEDFORD QUARRIES CO. v. THOMLINSON et al.

(Circuit Court of Appeals, Seventh Circuit. June 6, 1899.)

No. 558.

1. EQUITY JURISDICTION—REMEDY AT LAW—ADMINISTRATION.
   Ordinarily a bill in equity will not lie to compel personal representatives to satisfy a debt of their decedent, since the remedy at law is adequate.
2. FEDERAL AND STATE COURTS—JURISDICTION—ADMINISTRATION.
   Such a bill will not lie in a federal court for the further reason that in general the administration of the estates of deceased persons is left to the local law.[1]

Appeal from the Circuit Court of the United States for the Northern Division of the Northern District of Illinois.

Sherley Schooler, for appellant.
Jesse H. McCulloch, for appellees.

Before WOODS and JENKINS, Circuit Judges, and BUNN, District Judge.

BUNN, District Judge. This is a suit in equity brought by the Bedford Quarries Company, a corporation of Indiana, against Joseph Thomlinson, as executor, and Sarah Thomlinson, executrix, of the last will and testament of John Thomlinson, deceased, residing at Chicago, Ill., to require the defendants to satisfy a debt of $3,554.74 and interest owing by the decedent in his lifetime to complainants for stone delivered to him upon certain contracts for that purpose. After setting out the contract for the delivery of the stone on board the cars, the delivery thereof by the complainants, the amounts paid by the deceased, and the claim for balance due, the bill sets forth that during the lifetime of the decedent complainants had frequently requested payment of the demand, and that after his death, November 10, 1897, and since the defendants came into possession of his estate, they had requested the said executors to make some provision for the payment of said indebtedness out of the funds of the estate in their hands, but that defendants have been heedless of such requests, and that their acts and omissions tend to the manifest wrong of the complainants. These are, in substance, all the facts set forth

[1] See note at end of case.

Digitized by Google

by the bill of complaint. There was a general demurrer to the bill, and the court below dismissed the bill for want of equity. It must be conceded that the bill is very meager in its allegations of fact to bring the case within any principle of equity cognizance. There are two well-settled principles of jurisprudence which the bill seems in the main to ignore: The one is that equity will not afford relief where there is a full and ample remedy at law. The other is that in general the administration of the estates of deceased persons is left to the local law. There are no facts alleged to take the case from the operation of either of these well-settled principles of jurisprudence. The bill, no doubt, states a good cause of action at law against the decedent, and this is all. No reason is given why equity should take cognizance of the case. For aught that appears, the complainants have an adequate remedy at law for the collection of their debt. There are no allegations tending to show fraud or concealment on the part of the executors, or misappropriation of property, making a bill for discovery necessary. There is no showing that the executors had qualified or entered upon the duties of their office, that the will had been proven, or that the time had come when the executors had any power or authority to act. For all that appears, the executors may have taken possession of the property merely to preserve it until the will should be proven, and the executors should qualify and enter upon the discharge of their duties, in which event they would have no authority or power to pay debts. The bill alleges that the executors had property enough in their hands to pay complainants' debt, but fails to allege that there were not other debts to be paid, or, if there were, that there was property enough to pay all the debts in full. What right would the executors have to pay the complainants' claim in advance of any marshaling of the debts and assets of the estate, that it might be seen whether the creditors could all be paid in full? It is alleged that the will provided for the payment of debts. But that would not authorize the payment in full of debts as they are demanded, without some account being made of the condition of the estate, to see whether all creditors could be paid in full. If such a proceeding as this were allowable, any estate, however solvent under the usual prudent and orderly management which obtains in probate courts, might be ruined by an accumulation of bills in equity. If one creditor may thus pursue the estate, all may. A nonresident would have no advantage over resident creditors, and all might go into equity with their suits, and embarrass and overwhelm the estate with costs before time could be had to marshal the debts and assets. If such a bill as this could be maintained, there is no reason why the equity jurisdiction of the court might not draw to itself the entire administration of the estates of deceased persons, thus taking it out of the hands of the courts of probate, where it has generally been so well and economically administered in this country under local law. There is nothing in this bill to show that if the complainants, at the proper time, had filed their claim in the probate court, it would not, in due course of the administration of the estate, have been paid. If the claim so filed were disputed, they would, being nonresidents of the

Digitized by Google

state, be entitled to their action at law in the United States circuit court to establish their claim. But, when so established, it should be filed with the other claims against the estate, and take its place on equal terms with them. Yonley v. Lavender, 21 Wall. 276; Williams v. Benedict, 8 How. 107.

In Yonley v. Lavender the supreme court lays down the rule as follows:

"Where a statute of a state places the whole estate—real and personal—of a decedent within the custody of the probate court of the county, so that the assets may be fairly and equitably distributed among creditors, without distinction as to whether resident or nonresident, a nonresident creditor may get a judgment in a federal court against the resident executor or administrator, and come in on the estate according to the law of the state for such payment as that law, marshaling the rights of creditors, awards to debtors of its class. But he cannot, because he has obtained a judgment in the federal court, issue an execution, and take precedence of other creditors who have no right to sue in the federal courts."

Chancellor Kent states the rule correctly, but somewhat mildly, in McKay v. Green, 3 Johns. Ch. 56, as follows:

"I doubt whether a creditor ought to come into this court, in an ordinary case, and without some special cause, to collect his debt from an executor or administrator. It would seem not to be enough to state that he is a simple-contract creditor, for this would invite all suits against executors in this court. The ordinary and proper, as well as cheaper and easier, remedy, is at law."

The supreme court of New Hampshire, in Walker v. Cheever, 35 N. H. 345, lays down a similar rule, as follows:

"Under the English practice, courts of equity assume a very general jurisdiction over cases of administration, from the fact that the courts of common law and ecclesiastical courts in that country are held not to have powers adequate to give effectual relief. This jurisdiction is said to have been founded upon the principle that it is the duty of the court to enforce the execution of trusts. But it has also been said that other grounds exist, such as the necessity of taking accounts and compelling a discovery. With us there is no necessity for assuming such general jurisdiction in equity upon this subject. Our statutes providing for the settlement and distribution of estates in most cases give ample powers to the courts of probate and of common law to enforce all needful remedies to secure the rights of all parties, and, so far as the statutes may apply in the settlement of estates, they take from chancery its jurisdiction."

In the state of Illinois, where this suit was brought, the statute gives the administration of estates of deceased persons to the probate courts of the several counties. And it is well settled by the decision of the supreme court of that state that a court of equity will not exercise jurisdiction over such estates by entertaining proceedings against an administrator or executor, except in extraordinary cases, where some special reason is shown why there is not a complete and ample remedy at law. Freeland v. Dazey, 25 Ill. 294, 297; Heustis v. Johnson, 84 Ill. 61; Winslow v. Leland, 128 Ill. 304, 340, 21 N. E. 588; Shepard v. Speer, 140 Ill. 238, 246, 29 N. E. 718; Duval v. Duval, 153 Ill. 49, 53, 38 N. E. 944; Crain v. Kennedy, 85 Ill. 340; Harding v. Shepard, 107 Ill. 264, 273; Blanchard v. Williamson, 70 Ill. 647, 651; Harris v. Douglas, 64 Ill. 466, 468, 469; Armstrong v. Cooper, 11 Ill. 561, 562; Hales v. Holland, 92 Ill. 494, 497, 498; Goodman v. Kopperl, 169 Ill. 136, 48 N. E. 172.

In Hales v. Holland, 92 Ill. 494, there was a bill in equity similar

Digitized by Google

to this brought by a creditor against the heirs and administrators. The court, in deciding the case, say:

"The main question in this case is whether chancery will take jurisdiction to allow a claim, for that is the effect of the relief sought. The statute has prescribed a simple, expeditious, and inexpensive mode of presenting and allowing claims against estates in the probate court. The remedy thus given to creditors is ample and complete in all ordinary cases. Here was a simple legal claim,—a debt due by note, and susceptible of proof, and free from all equitable complications. If equity may take jurisdiction to hear proof and allow such a claim, then it is difficult to conceive a claim so purely legal in its nature that a bill might not be maintained to establish it and to control its administration. It never could have been intended by the general assembly that every person having a note, account, or other legal demand should have the right to resort to the expensive course of filing a bill for the simple purpose of probating the claim; and, if one such claim may be thus probated, all may, and estates consumed in the payment of costs of litigation. To so hold would be to defeat the statute prescribing the mode of settling estates, and to render the probate court useless, and substitute a different mode of adjusting estates from that established and required by the general assembly. See Blanchard v. Williamson, 70 Ill. 647. It is true that there may be isolated cases where a claim against an estate is equitable, or is so entangled that a court of law is unable to investigate and establish it for allowance against the estate, and the intervention of chancery may become necessary for the adjustment of such claims. But such cases are rare and of an extraordinary character. * * * It surely will not be contended that any creditor may file a bill on a purely legal demand against an estate for allowance and administration, and thus remove the settlement of the entire estate from the probate court, where the statute has placed it. To administer the assets of the estate for the satisfaction of one claim would necessitate the settlement of the entire estate. To order the payment would require an investigation of the condition of the estate, the claims allowed and preferred against it, and the situation and condition of the assets and the accounts of the executor or administrator. The chancellor surely has no such power, and, until required by legislative enactment, it cannot be sanctioned."

The subject is fully dealt with by the United States supreme court in Board of Public Works v. Columbia College, 17 Wall. 521, in a very able opinion by Mr. Justice Fields, in the manner following:

"The jurisdiction of a court of equity to reach the property of a debtor justly applicable to the payment of his debts, even when there is no specific lien on the property, is undoubted. It is a very ancient jurisdiction, but for its exercise the debt must be clear and undisputed, and there must exist some special circumstances requiring the interposition of the court to obtain possession of and apply the property. Unless the suit relates to the estate of a deceased person, the debt must be established by some judicial proceeding, and it must generally be shown that legal means for its collection have been exhausted. * * * The rule requiring the existence of special circumstances bringing the case under some recognized head of equity jurisdiction should not only be insisted upon with rigor whenever the property sought to be reached constitutes, as here, assets of a deceased debtor which have already been subject to administration and distribution; but some satisfactory excuse should be given for the failure of the creditor to present his claim, in the mode prescribed by law, to the representative of the estate, before distribution. Williams v. Gibbes, 17 How. 239, 254, 255; Pharis v. Leachman, 20 Ala. 662. In England courts of chancery took jurisdiction of bills against executors and administrators for discovery and accounts of assets, and to reach property applicable to the payment of the debts of deceased persons not merely from their general authority over trustees and trusts, but from the imperfect and defective power of the ecclesiastical court. It was sufficient that a debt existed against the estate of a decedent, and that there was property which should be applied to its payment, to justify the interposition of the court. * * * In this country there are special courts, established in all the states, having jurisdiction over the estates of deceased persons, called 'Probate Courts,' 'Orphans' Courts,' or 'Surrogate Courts,' possess-

Digitized by Google

ing, with respect to personal assets, nearly all the powers formerly exercised by the court of chancery and the ecclesiastical courts of England. They are authorized to collect the assets of the deceased, to allow claims, to direct their payment and the distribution of the property to legatees or other parties entitled, and generally to do everything essential to the final settlement of the affairs of the deceased and the claims of creditors against the estate. There is a special court of this kind in this District, called the 'Orphans' Court,' which was competent to allow the complainant's demand, but the demand was never presented to it for allowance. That court could have directed the application of the assets of the estate, if a demand had been allowed, or, if rejected, had been established by legal proceedings."

These cases are decisive of the one at bar, and the decree of the circuit court dismissing the bill is affirmed.

NOTE.

Probate Jurisdiction of the Federal Courts.[1]

1. Proceedings to Establish or Determine Validity of Will.

[a] (U. S.) The courts of the United States have no probate jurisdiction, and must receive the sentences of the courts to which jurisdiction over testamentary matters are committed as conclusive of the validity and contents of a will. (1835) Tarver v. Tarver, 9 Pet. 174; (1855) Fouvergne v. City of New Orleans, 18 How. 470.

[b] (U. S.) Jurisdiction, as to wills and their probate as such, is neither included nor excepted out of the grant of judicial powers to the courts of the United States. So far as it is ex parte, and merely administrative, it is not conferred, and it cannot be exercised by them at all, until in a case at law or in equity its exercise becomes necessary to settle a controversy of which a court of the United States may take cognizance by reason of the citizenship of the parties.—(Sup. 1883) Ellis v. Davis, 3 Sup. Ct. 327, 109 U. S. 485; (C. C. Miss. 1888) Everhart v. Everhart, 34 Fed. 82.

[c] (U. S. Sup. 1883) Circuit courts of the United States, as courts of equity, have no general jurisdiction for annulling or affirming the probate of a will. —Ellis v. Davis, 3 Sup. Ct. 327, 109 U. S. 485.

[d] (U. S. Sup. 1883) If, by the law obtaining in a state, a suit whose object is to annul or set aside the probate of a will of real estate can be maintained, it may be maintained in a federal court, where diversity of citizenship gives jurisdiction.—Ellis v. Davis, 3 Sup. Ct. 327, 109 U. S. 485.

[e] (U. S. C. C. A. 9th Circuit, 1894) The proceeding under the laws of Oregon to contest the validity of a will which has been admitted to probate is one of which the United States circuit court has jurisdiction, where the amount in controversy is sufficient, and the parties are citizens of different states.—Richardson v. Green, 9 C. C. A. 565, 61 Fed. 423.

[f] (U. S. C. C. N. H. 1842) The state courts have exclusive jurisdiction over the probate of wills, and their action is conclusive.—Langdon v. Goddard, Fed. Cas. No. 8,060 [2 Story, 267].

[g] (U. S. C. C. Mich. 1878) A federal court has no jurisdiction of a probate matter.—In re Frazer, Fed. Cas. No. 5,068.

[h] (U. S. C. C. La. 1879) A decree admitting a will to probate and record, made by a probate court, given plenary powers as to contest, cannot be set aside by the circuit court of the United States, on a bill filed by testator's heirs at law.—Ellis v. Davis, Fed. Cas. No. 4,402 [4 Woods, 6].

[i] (U. S. C. C. Mich. 1890) The chancery jurisdiction of the federal courts does not extend to the appointment of administrators, confirmation of executors, or the probate of wills.—Ball v. Tompkins, 41 Fed. 486.

[j] (U. S. C. C. Mich. 1891) Where the necessary diversity of citizenship exists, the circuit court has jurisdiction of a suit for the construction of a will,

[1] As to power of a state to devest or impair probate jurisdiction of the federal courts, see note to Barling v. Bank, 1 C. C. A. 514.

Digitized by Google

the execution, validity, and probate of which are recognized, there having been no construction of the will, and no adjudication of complainant's rights thereunder, either by the probate court in which the settlement of the estate is pending, or by any other tribunal having jurisdiction of the subject and the parties.—Toms v. Owen, 52 Fed. 417.

[k] (U. S. C. C. N. H. 1894) A federal court has no jurisdiction to disestablish a will admitted to probate in the state court and establish one not admitted, where the state courts of equity have no such powers.—Cilley v. Patten, 62 Fed. 498.

[l] (U. S. C. C. Mo. 1894) Federal courts have no jurisdiction of a direct action to cancel a will, under the act of congress giving them jurisdiction of suits at common law or in equity.—Oakley v. Taylor, 64 Fed. 245.

[m] (U. S. C. C. R. I. 1895) A will having been established by competent authority, the federal courts have jurisdiction to determine its interpretation, in an action between citizens of different states.—Wood v. Paine, 66 Fed. 807.

[n] (U. S. Ind. 1896) The federal courts have no jurisdiction, either original or upon removal from a state court, of a suit instituted to determine the validity of a will, as a preliminary step in determining whether its probate should be granted or denied.—Copeland v. Bruning, 72 Fed. 5.

2. Administration of Estate.

[a] (U. S.) Federal courts have no original jurisdiction in respect to the administration of decedents' estates. A citizen of another state may proceed in a federal court to establish a debt against the estate, but the debt thus established must take its place and share in the estate as administered by the probate court. It cannot be enforced by direct process against the estate itself.—(Sup. 1893) Byers v. McAuley, 13 Sup. Ct. 906, 149 U. S. 608; (C. C. 1896) In re Foley, 76 Fed. 390.

[b] (U. S. C. C. A. 6th Circuit, 1893) The circuit court has jurisdiction, as between citizens of different states, of the administration of the assets of deceased persons, such assets being within their territorial jurisdiction; and, in a suit against a trustee under a will for an accounting and distribution, the court erred in remitting the case to the state probate court for the taking of accounts.—Comstock v. Herron, 5 C. C. A. 266, 55 Fed. 803.

[c] (U. S. C. C. Pa. 1811) The federal court cannot examine an order of the Pennsylvania orphans' court directing a sale of realty to pay intestate's debts.—Allen v. Lyons, Fed. Cas. No. 227.

[d] (U. S. C. C. Mich. 1890) By virtue of their chancery jurisdiction, the federal circuit courts have jurisdiction over the administration of estates when the requisite citizenship and other conditions exist; but it will not be exercised when the state courts of concurrent jurisdiction have taken possession of the subject-matter of the controversy.—Ball v. Tompkins, 41 Fed. 486.

[e] (U. S. C. C. Iowa, 1894) A federal court is not deprived of jurisdiction, otherwise vested in it, of a suit against the executors of an estate, by the fact that the estate is in the possession of a state probate court for purposes of administration; and the federal court has jurisdiction to adjudge whether a liability exists, but cannot issue execution to enforce the same.—Wickham v. Hull, 60 Fed. 326.

[f] (Mo. Sup. 1893) Rev. St. § 190, which provides that "any person having a demand against an estate may establish the same by judgment or decree of some court of record," does not limit the jurisdiction over such demands to the state courts; and an action may be brought in the federal court for that purpose.—Stephens v. Bernays, 24 S. W. 46, 119 Mo. 143.

Digitized by Google

(94 Fed. 324.)

BOARD OF EDUCATION OF CITY OF HURON, S. D., v. NATIONAL LIFE INS. CO. OF MONTPELIER, VT. SAME v. PEASLEE. SAME v. MONADNOCK SAV. BANK OF EAST JAFFREY, N. H.

(Circuit Court of Appeals, Eighth Circuit. April 3, 1899.)

Nos. 1,118, 1,119, and 1,132.

1. BOARD OF EDUCATION—CORPORATE NATURE—BONDS.
The board of education of the city of Huron, organized under Laws Dak. 1887, c. 47, is a body corporate, separate and independent from the city of Huron, and, in determining whether bonds issued by it increase the corporate indebtedness beyond the prescribed limit, its debts, and not the debts of the city, are to be computed.

2. SAME—LIMITATION OF INDEBTEDNESS.
Comp. Laws Dak. 1887, §§ 1149, 1150, providing that the limit of bonded indebtedness that may be incurred by a city or other municipal corporation shall be based on its assessed valuation for the year preceding the incurring of the indebtedness, do not apply to boards of education created under Laws Dak. 1887, c. 47, which is complete in itself, and restricts the power of boards of education to issue bonds to an amount not exceeding 3 per cent. of their assessed valuation, though it is silent as to what assessment shall be used in the computation.

3. SAME—COMPUTATION OF ASSESSED VALUATION.
Under Laws Dak. 1887, c. 47, restricting the power of boards of education to issue bonds to an amount not exceeding 3 per cent. of their assessed valuation, the computation must be based on the last completed assessment before the bonds were issued.

In Error to the Circuit Court of the United States for the District of South Dakota.

John L. Pyle (Henry C. Hinckley and H. S. Mouser, on brief), for plaintiff in error.

A. B. Kittredge (N. T. Guernsey, on brief in case No. 1,118), for defendants in error.

Before CALDWELL, SANBORN, and THAYER, Circuit Judges.

THAYER, Circuit Judge. These are suits which were brought separately by three different holders of coupons detached from municipal bonds which were issued by the board of education of the city of Huron, in the state of South Dakota, the plaintiff in error, hereafter termed the "board of education." The bonds from which the coupons were detached are of the same issue as those that were involved in the case of National Life Ins. Co. of Montpelier v. Board of Education of City of Huron (decided by this court at May term, 1894) 27 U. S. App. 244, 10 C. C. A. 637, and 62 Fed. 778, and for a full statement of the facts attending the issuance of the bonds, and the law under which the board of education acted, we refer to our statement and opinion in the former case. The National Life Insurance Company, Robert J. Peaslee, as assignee of the New Hampshire Trust Company, and the Monadnock Savings Bank of East Jaffrey, the defendants in error, who were the plaintiffs below in the respective cases, are confessedly bona fide holders of the coupons on account of which they respectively sue, having bought the bonds from which they were detached, in good faith, for value, and prior to maturity.

Digitized by Google

To the complaints which were filed in the three cases the board of education filed answers, which were in substance the same, wherein it pleaded the same defenses, that were adjudged insufficient by this court in the former suit. Id. Demurrers to the several answers were interposed by the respective plaintiffs, which were sustained, and final judgments were thereupon entered in favor of the plaintiffs below.

It is unnecessary to discuss any of the questions which were considered and decided on the former occasion, and we shall refrain from doing so, as we have no doubt that the conclusions then announced were right, and as the facts pleaded in the present cases in no wise change the point of view from which any of the questions formerly considered were decided. It is claimed, however, on the present occasion, and the point must be regarded as new, that the board of education is not a separate and independent corporation, but a mere adjunct or department of the corporation known as the "City of Huron," and that in view of such fact all of the city indebtedness, as well as the indebtedness of the board of education, should be taken into account in determining whether the bonds in question, which aggregated altogether $60,000, being 120 bonds of the denomination of $500 each, when issued, increased the corporate indebtedness beyond the limit allowed by law. This contention we regard, however, as untenable. The board of education appears to have been organized under and in accordance with chapter 47 of the laws of the then territory of Dakota for the year 1887. This act appears in the Compiled Laws of Dakota of 1887, the most material provisions being found in sections 1808, 1810–1818, 1820, and 1824 of the Compiled Laws. Without setting out these sections in hæc verba, it will suffice to say that section 1808 provided that all cities thereafter organized under the general law for the incorporation of cities, to which class the city of Huron belongs, should be governed by the provisions of the act; that section 1810 provided that territory outside of the boundaries of any organized city or town, but adjacent thereto, might be attached to the city or town for school purposes upon application to the board of education of such city by a majority of the electors of the adjacent territory; that section 1811 declared, in substance, that the organization effected in pursuance of the provisions of the act should be a "body corporate," and should possess the usual powers of a corporation for public purposes, under the name of the board of education of the city or town to which it appertained, and in that name might sue or be sued, and be capable of contracting and being contracted with, and of holding and conveying such real and personal estate as might come into its possession by will or otherwise, or that might be purchased under the provisions of the act. Section 1812 of the act provided, in substance, that the respective boards of education might require the city or town to which they appertained to convey to the board all school property within the limits of such city or town. Section 1814 provided, in substance, that the members of the board should be elected at an annual election, that each ward of the city should be entitled to elect as many members of the board as it had members in the city council, but that no member of the

Digitized by Google

board of education should be a member of the city council, and that no member of the board of education should be a trustee of a town or village to which the board to which he was elected appertained, and that each board of education should have power to fill any vacancy which might occur in its body. Sections 1816 and 1817 provided, in substance, that the board of education should have power to elect its own officers, except the treasurer, and to make its own rules and regulations, and that at a regular meeting of each board, to be held in May of each year, each board should organize by the election of a president and vice president from among its own members, who should hold office for one year until their successors were elected and qualified, and that each board should also elect a clerk, who should hold his office during the pleasure of the board. Section 1818 made it the duty of the president to preside at all meetings of the board, to appoint all committees, and to sign all warrants for money ordered by the board to be drawn upon the treasurer for school moneys. Section 1820 made it the duty of the clerk to keep an accurate journal of the proceedings of the board, to take charge of its books and documents, and countersign all warrants for money which were drawn on the treasurer by order of the board. Section 1824 empowered the board of education to levy a tax for the support of the schools of the corporation for the fiscal year next ensuing, not to exceed in any one year 30 mills on the dollar, which levy, however, was required to be approved by the city council of the city to which the board appertained, when there was one. The clerk of the board was required to certify to the county clerk the amount of the tax levied when it was thus approved, and the county clerk, on receipt of the certificate, was required to place the tax on the tax roll of the county, to be collected by the treasurer of the county as other taxes.

It is manifest, we think, from an inspection of the various provisions of the act under which the board was organized, that it is in fact what section 1811 of the Compiled Laws of Dakota in unmistakable language declares it to be, namely, a "body corporate," or, in other words, a "distinct legal entity," having powers and functions to be exercised separate and apart from the city of Huron. The practice of creating such independent corporations within the territorial limits of other municipal corporations, like cities and towns, for the purpose of placing the control of schools and school property in the hands of persons who are not municipal officers or concerned in the management of municipal affairs, is quite common, and we have no doubt that the act now in question was passed for that purpose. The claim that the issue of bonds was excessive, in view of the amount of the corporate indebtedness, is founded altogether upon the assumed identity of the two corporations,—that is to say, the city of Huron and the board of education,—and, as the assumption is false, it follows that the issue cannot be deemed excessive for that reason.

It is next insisted in behalf of the board of education that, in determining whether the issue of bonds was excessive, the assessment roll for the year 1889 must be consulted, rather than the assessment for the year 1890. The answer filed by the board of education al-

Digitized by Google

leged that the assessed valuation of property within the city of Huron for the year 1889 was $1,575,001, that the assessed valuation for the year 1890 was $3,365,008, and that the equalization of taxes for the year 1890 had been completed by the state board of equalization before the issuance of the bonds in question. The act creating boards of education, under which the plaintiff in error was organized, provided, with respect to issuing bonds for school purposes (vide section 1832, Comp. Laws 1887), that "no corporation shall issue bonds in pursuance of this act in any sum greater than three per cent. of its assessed valuation." In view of the allegation of the answer last mentioned, showing that the assessment for the year 1890 had been completed before the bonds were issued, and the amount of that assessment, it is not denied that they were within the limit of indebtedness fixed by law, if section 1832 is controlling. It is urged, however, by the plaintiff in error, that another section of the Compiled Laws, namely, section 1149, is applicable to the case. This latter section of the Compiled Laws of 1887, and the one following (section 1150), are sections 1, 2, and 3 of an act that was passed by the territorial legislature of Dakota, in the year 1887, with reference to "bonds of municipal corporations," which act was designed, apparently, to set a limit to the bonded indebtedness that might be contracted by a city or other municipal corporation of that kind, to wit, a town or village. It provided, in substance (vide sections 1149, 1150, Comp. Laws Dak. 1887), that the bonded indebtedness of any city or municipal corporation should not exceed 4 per cent. of its assessed valuation, as shown by the returns of the assessor for the year next preceding the time when the indebtedness should be incurred, and that the bonds therein referred to should be issued by the common council or board of trustees of any city or municipal corporation only upon a majority vote of the qualified electors of such city or corporation at an election called for that purpose. The claim is that the phrase "municipal corporation," as used in this act, includes boards of education of the class to which the plaintiff in error belongs, and that when, on October 4, 1890, the board issued the bonds in suit, it should have been governed by the assessment roll of 1889, that being the assessment of the preceding year, rather than by the assessment of 1890, although the latter assessment was completed before the bonds were issued. We entertain a different view. We are of opinion that the act under which the plaintiff in error was organized is complete in itself; that its powers and duties, as well as the limitations upon its power to issue bonds, are contained in the act under which it became a body corporate; and that, when section 1832 of that act restricted the power of boards of education to issue bonds to an amount not exceeding 3 per cent. of their "assessed valuation," it was intended that the computation should be based on the last completed assessment before the bonds were issued, which in the case at bar was the assessment of 1890. Sections 1149 and 1150 expressly provide that the bonds therein referred to shall be issued by the common councils or boards of trustees of cities or municipal corporations, no reference being made to boards of education, like the plaintiff in error,

Digitized by Google

which are expressly empowered to issue bonds for school purposes in their own name. Vide Comp. Laws 1887, § 1832. In view of this fact, it seems clear that sections 1149 and 1150 were only intended to apply to those municipal corporations, such as cities or villages, which were governed by common councils or boards of trustees. If these two acts are thus construed as independent measures relating to different subjects, the one to boards of education, and the other to the bonded indebtedness of cities and villages, they are consistent in their several provisions, and neither act limits or controls the other. If the board of education is subject to the limitation found in section 1149, that computations for the purpose of issuing bonds must be based on the assessment "for the year next preceding the time" when they are issued, then we perceive no reason why it may not with equal reason be claimed that it was subject to other limitations found in the same section, in which event it was entitled to issue bonds to the extent of 5 per cent. of the assessed valuation for the year 1889, instead of 3 per cent., or, in other words, to issue bonds to the amount of $78,750, since section 1149 was amended by an act approved on February 27, 1890, by raising the limit from 4 per cent. of the assessed valuation to 5 per cent. Vide Sess. Laws S. D. 1890, c. 59. In this aspect of the case the result would be that the plaintiffs below were clearly entitled to recover. They were innocent purchasers of the bonds for value. The bonds showed on their face that the total issue was less than $78,750, and, not having actual knowledge of any other or greater indebtedness, the plaintiffs were entitled to rely on the recital, which each bond contained, "that the total amount of this issue of bonds, together with all other outstanding indebtedness of said board of education, does not exceed the statutory or constitutional limitation." Board Com'rs Gunnison Co. v. E. H. Rollins & Sons (recently decided by the supreme court of the United States) 173 U. S. 255, 19 Sup. Ct. 390; Id., 49 U. S. App. 399, 411, 412, 26 C. C. A. 91, and 80 Fed. 692; Chaffee Co. v. Potter, 142 U. S. 355, 12 Sup. Ct. 216. Without pursuing the subject at greater length, it is sufficient to say that we are satisfied that the judgments below were for the right party, and they are therefore affirmed.

(94 Fed. 340.)

SCOTT et al. v. TEXAS & P. RY. CO.

(Circuit Court of Appeals, Fifth Circuit. May 2, 1899.)

No. 774.

1. RAILROADS—RIGHT OF WAY—ADVERSE POSSESSION—CONTRACTS.
   That a railroad did not for the statutory period adversely occupy its entire right of way is not material, where the contract under which the right of way was acquired has been fully complied with; the title under the contract alone being sufficient.

2. SAME—EVIDENCE—ESTOPPEL.
   Evidence of a partial occupancy of a right of way, to show that there was not an adverse holding of the remainder, is not admissible, where the suit, at its inception, was one for damages for occupancy of the entire right of way, in violation of the contract under which it was acquired.

Digitized by Google

In Error to the Circuit Court of the United States for the Eastern District of Texas.,

This case is substantially as stated by plaintiffs in error as follows:

"This action was brought on the 12th day of January, 1893, in the district court of Harrison county Tex., and was removed to the circuit court of the United States, at Jefferson, in the Eastern district of Texas. The plaintiff in error sued to recover damages for the abolition or removal of the depot known as 'Scottsville,' in Harrison county, Tex. The Southern Pacific Railway Company and W. T. Scott, in the year 1856, entered into a verbal contract, by which said Scott agreed to allow the said company to have the use of land for a right of way across his farm of 5,000 acres, if the company would establish a depot, with a regular agent, at the point on said lands then and now known as 'Scottsville,' and, further, if said company would permanently maintain said depot at said place, and furnish to the said William T. Scott free passage on the cars of said company for himself. The right of way was laid out 100 feet wide and 700 yards long, and used by the company for its track from that time. The company established and maintained said depot, under and in accordance with said contract, until April, 1892, when the same was abolished. The abolition of said depot had caused the plaintiff a damage of $50,000. The plaintiff prayed judgment for said damages, or, in the alternative, for the land, if the damages could not be awarded. It was shown that the defendant in error had succeeded, by consolidation under legislative permission, to all of the rights of the Southern Pacific Railway Company. The acts of the legislature of the state of Texas, approved May 24, 1871, November 25, 1871, and May 2, 1873, relative to the consolidation of the Southern Pacific Railway Company and defendant, were read in evidence, and may be copied in the briefs of counsel in the appellate court; the Texas & Pacific Railway Company succeeding to all of the rights of the Southern Pacific Railway Company. The plaintiff in error alleged that W. T. Scott had died, and that he acquired the Scott farm by purchase, and owned the land at Scottsville, and was entitled to the damages. Subsequently the other heirs of W. T. Scott intervened, and claimed that they and plaintiff in error were all of the heirs at law of W. T. Scott, and that they were entitled to the recovery of the damages or the land. The heirs, as such, now prosecute the case. The case was tried in the circuit court, and that court held that the plaintiffs in error could not recover any damages for the abolition of the depot, but that they were entitled to recover the value of the land occupied as a right of way, and assessed the damages according to the rule obtaining in condemnation proceedings when lands are taken for right of way. The circuit court of appeals reversed this judgment (23 C. C. A. 424, 77 Fed. 726), and held: (1) That the company had acquired the right of way by adverse use and prescription, and therefore plaintiffs could recover neither the land nor pay for same; (2) that the defendant in error had complied with its contract, and was not amenable to any suit whatever. This ruling was based on Railway Co. v. Marshall, 136 U. S. 393, 10 Sup. Ct. 846.

"Before the case was tried the second time in the circuit court, the plaintiffs in error filed the second supplemental petition (a replication) to plea of limitation and prescription, in which they averred that the defendant in error had actually occupied and used only a strip of land 25 feet wide, and not a strip 100 feet wide, and that defendant would be entitled to recover on its plea of prescription only the strip 25 feet wide. On the second trial the defendant relied on the general demurrer and the following answer: 'Defendant says that plaintiffs cannot recover in this cause, because the evidence shows that this defendant company and its predecessors have substantially complied with the contract set out in plaintiffs' petition, by keeping the station referred to at the place of Scottsville fully equipped and repaired and operated from the year 1856, continually, to April, in the year 1892, whereby the defendant has fully complied with said contract sued on, and the plaintiffs cannot recover.' The court made the following ruling on the demurrer: 'This day came on to be heard the demurrer of the defendant, and the court sustains said demurrer, and holds that the contract set up had been complied with by the defendant,

Digitized by Google

and that no damages for removal of station can be recovered.' To this ruling the plaintiff and interveners excepted. On the first supplemental petition, asking pay for the land used as a right of way, the court made this ruling: 'The court refused to hear any evidence on the allegations of the first supplemental petition, as to assessing damages and fixing compensation for plaintiff and interveners as in condemnation proceedings.' To this ruling interveners and plaintiff excepted. The plaintiffs in error on the trial introduced evidence proving the allegations of the petition as to the contract, and the abolition of the depot in 1892, and then offered further evidence to maintain the case as follows: 'Thereupon the plaintiff and interveners offered the following evidence: That the defendant, in April, 1892, fenced the right of way along the track, on the land described in the petition, and that the fence so erected by the defendant inclosed a strip of land 100 feet wide, and the same which is described in the petition, and that, prior to the time said land was so fenced, all of it, except a strip 40 feet wide, through the center of which the track lay, had been used, cultivated, and occupied by the plaintiff and interveners, and that there had been no occupancy of any of said land by defendant, except the strip 40 feet wide, and that the plaintiff and interveners had occupied the remainder of said strip 100 feet wide; that the depot at Scottsville was removed in April, 1892; also, the allegations of their pleadings as to removal of said depot; also, the allegations as to the rental value of that part of the land occupied by the defendant and inclosed in its fences built in 1892, and which it had not occupied prior to said date as a right of way; and, also, all other allegations of said pleadings of interveners and plaintiff showing the violation of the contract on which the suit was brought. Whereupon the defendant objected to all of said evidence, because the allegations of the plaintiff's pleadings and the plaintiff's evidence showed that the defendant had complied with said contract set up in the petition, and had kept said depot at Scottsville until April, 1892, and that the said petition showed that under the contract the defendant was entitled to a right of way 100 feet wide when it complied with the contract; and thereupon the court sustained said objections, and excluded all of said evidence, and held that said contract had been complied with, and gave the jury a peremptory instruction to find for defendant.'

"The first, third, fourth, and fifth assignments of error are as follows: '(1) The court erred in sustaining the demurrers of defendant, and holding, on said demurrers, that the contract set up in the petition had been complied with, and in refusing to hear the evidence as to damages.' '(3) The court erred in holding that the pleadings of plaintiff and interveners and the evidence showed that the contract had been substantially complied with. (4) The court erred in giving the jury a peremptory instruction to find for the defendant. (5) The court erred in holding that the pleadings of the plaintiff and interveners showed that the contract had been complied with by the defendant, and that they, the plaintiff and interveners, were not entitled to any relief.' "

S. P. Jones and T. P. Young, for plaintiffs in error.

F. H. Prendergast, for defendant in error.

Before PARDEE, McCORMICK, and SHELBY, Circuit Judges.

PER CURIAM. When this case was formerly before this court, the contention of the railway company was that the contract sued on, not being in writing, nor to be performed within one year, was void under the statute of frauds, and that the railroad company had acquired the right of way in question, 100 feet wide through the lands described, by the use and enjoyment thereof during a period of 36 years, which use had been exclusive, uninterrupted, continuous, and under a claim of right adverse to the owner of the fee; and, in the alternative, that, if the contract sued on was valid, then the railroad company had acquired the right of way in question by having fully complied in all respects with the terms of said contract. This court sustained the contention of the railroad company, reversed the judg-

Digitized by Google

ment of the circuit court, and remanded the cause for a new trial. Railway Co. v. Scott, 41 U. S. App. 624, 23 C. C. A. 424, and 77 Fed. 726. The questions presented in this present writ appear to be the same as presented in the former, with the exception that, although the contract provided for a strip, or right of way, 100 feet wide, the railroad company, prior to 1892, only used and occupied a strip 25 feet wide, and therefore the plaintiffs, on the theory that the contract was void, are entitled to recover all of the right of way in controversy except a strip 25 feet wide.

The record shows that, to maintain this contention, the plaintiffs offered evidence to prove that, except for the strip 25 feet wide, prior to 1892, the plaintiffs and their ancestors used, occupied, and cultivated the same, and that the railroad company was not in possession, and this evidence was rejected. If the right of the railroad company to hold the right of way in question is based solely upon adverse use and possession, it would seem that the evidence offered should have been admitted. If, however, the title of the railroad company is based upon the contract as a valid executed contract, the evidence was properly rejected. The court held, on the former writ, that, if the contract was invalid, the railroad company had an easement by adverse use and occupancy; yet it appears clear that the court also decided that the contract sued on, having been fully performed and executed, was a valid and binding contract, and that thereunder the railroad company had acquired full title to the right of way as specified and described in the contract, and that was, as admitted by the plaintiffs in their original petition, a strip 100 feet wide, 50 feet on each side of the center of the track. Under this view of the case, and considering, further, that the contention of the plaintiffs in error that the strip taken for the right of way was only 25 feet wide is in conflict with his former judicial admissions, we are of opinion that the ruling of the court below rejecting the evidence was correct.

The judgment of the circuit court is affirmed.

(94 Fed. 343.)

REISTERER v. LEE SUM.

(Circuit Court of Appeals, Second Circuit. March 1, 1899.)

No. 105.

1. MALICIOUS PROSECUTION—WHEN ACTION LIES.

One who both makes an arrest, and originates the proceeding in which it is made, may, though protected as to the arrest, be liable for malicious prosecution.

2. SAME—PROBABLE CAUSE—MALICE.

Where defendant put in motion a criminal proceeding against plaintiff, a Chinaman, under the Chinese exclusion act, on the ground that he had not a certificate of residence as required thereby, thus subjecting him to imprisonment and compelling him to establish his innocence, the only incriminating circumstances at the time being want of resemblance between plaintiff and the indistinct photograph attached to the certificate in his possession, and the existence of scars on his face, while the certificate stated that the person named in it had no physical marks or peculiarities

Digitized by Google

for identification, and the photographer testified that in his opinion the photograph was one of plaintiff, and that it might originally have shown the scars, and that they might have faded out, and defendant did not attempt to compare the photograph with the one which the act required to be filed in the office of the collector of internal revenue, and did not inquire when the scars were received, a finding of want of probable cause, from which malice may be inferred, is justified, though at a subsequent investigation, before trial before the commissioner, there was sufficient evidence of probable cause, in that plaintiff made contradictory statements as to his residence, when he obtained the certificate, and as to whether he had the scars before the photograph was taken, and he was found to be an inch taller than described in the certificate.

In Error to the Circuit Court of the United States for the Northern District of New York.

Chas. A. Brown, for plaintiff in error.

Before WALLACE, LACOMBE, and SHIPMAN, Circuit Judges.

WALLACE, Circuit Judge. This is a writ of error by the defendant in the court below to review a judgment for the plaintiff entered upon a verdict. The action was for malicious prosecution and false imprisonment. The plaintiff was a Chinese laborer employed in September, 1897, in a laundry at Tonawanda, and the defendant was an officer of the customs at that place. On September 17, 1897, the defendant arrested the plaintiff, and took him before a United States commissioner within the district; assuming to do so conformably to the provisions of the Chinese exclusion act. That act provides that all Chinese laborers entitled to remain in the United States shall apply to the collector of internal revenue of their respective districts for a certificate of residence, and that, if they shall be found within the United States without such certificate, they shall be deemed to be unlawfully within the United States, and may be arrested by any United States customs official, and taken before a United States commissioner, whose duty it shall be to order that such Chinaman be deported from the United States. The act also provides that the certificate shall contain the name, age, local residence, occupation, and such other description of the Chinaman as may be prescribed by the secretary of the treasury. Act May 5, 1892 (27 Stat. 25). The act further provides that any Chinese person arrested under its provisions shall be adjudged to be unlawfully within the United States, unless he shall establish by affirmative proof to the satisfaction of such commissioner his lawful right to remain in the United States. As amended by the act of November 3, 1893, the act provides that a photograph of the Chinaman shall be attached to the certificate, and that a duplicate be attached to a copy of the certificate, and be filed with it in the office of the collector issuing the certificate.

About a week previous to the arrest the defendant visited the laundry where the plaintiff was at work, and asked him to exhibit his certificate. The plaintiff did so, and the defendant examined it and returned it to the plaintiff. September 17th he again called upon the plaintiff, and, after again examining the certificate, took the plaintiff in custody, and went with him before Mr. Collins, his superior officer, to the custom house in Buffalo. Thereafter, by the direc-

Digitized by Google

tion of Mr. Collins, the defendant took the plaintiff before a United States commissioner in Buffalo, and preferred a complaint against him as a Chinese person unlawfully within the United States, and falsely impersonating one to whom a certificate had been issued. The plaintiff was committed to the custody of a United States marshal pending an examination before the commissioner, and after an examination was discharged by the commissioner.

Error is assigned of the refusals of the trial judge (1) to direct a verdict for the defendant upon the cause of action for malicious prosecution; (2) to instruct the jury that the plaintiff had failed to establish a want of probable cause for commencing the prosecution; and (3) to direct a verdict for the defendant upon the ground that the plaintiff had failed to establish a cause of action either for malicious prosecution or for false imprisonment.

It appeared in evidence upon the trial that the certificate produced to the defendant by the plaintiff was issued by the collector of the Third internal revenue district, at New York City, March 31, 1894, and, among other things, recited that the residence of the applicant was at 138 Mott street, New York, that his height was five feet two inches, and that he was without physical marks or peculiarities for identification. The photograph was indistinct. The plaintiff had several scars upon his face, but the photograph did not exhibit any.

When the defendant took the plaintiff before Mr. Collins at the custom house, the latter called in the immigration commissioner of the port and a Chinese interpreter; and the two officers questioned the plaintiff, to ascertain whether he was the person named in the certificate. In answer to their questions he made contradictory statements; saying at one time that when he obtained his certificate he lived on Pell street, in New York, and at another that he lived on Mott street, and stating at one time that the scars were upon his face before he obtained the certificate, and at another that they were not. Upon measuring him he was found to be five feet three inches in height, instead of five feet two inches, as stated in the certificate. It was after this examination that Mr. Collins directed the defendant to take the plaintiff before the commissioner and make the charge against him. The commissioner discharged the plaintiff, after the examination before him, upon the testimony of a photographer, who stated that in his opinion the photograph was a photograph of the plaintiff, and that it might originally have shown the scars upon his face, but that it was indistinct and they might have faded out.

It further appeared that the defendant did not communicate with the collector at New York City, or attempt to compare the photograph attached to the certificate with the duplicate filed with that officer. Evidence was also introduced on behalf of the plaintiff tending to prove that he came to this country in 1890, and lived in Mott street, New York City, when he obtained his certificate. He testified that the scars were upon his face before he got his certificate.

If it be assumed that by the provisions of the Chinese exclusion act the defendant was authorized to take the plaintiff into custody without criminal process, nevertheless the trial judge would not have been justified in taking the whole case from the jury if a cause

Digitized by Google

of action for malicious prosecution had been established by the evidence. The action for false imprisonment does not lie for an arrest made by an authorized officer upon criminal process regular upon its face, and issued by a magistrate having jurisdiction. Whitten v. Bennett, 30 C. C. A. 140, 86 Fed. 405; Carman v. Emerson, 18 C. C. A. 38, 71 Fed. 264; Marks v. Townsend, 97 N. Y. 590. If the act of congress authorizes an arrest without process, the officer who makes it is as fully protected as he would be if he made the arrest under valid process. But an officer who makes an arrest under valid process, if he is also the complainant or the person who originates the proceeding, does so at the risk of an action for damages if he acts maliciously and without probable cause. He is no more shielded by his process or his official capacity than any other person instituting a groundless and malicious charge would be. The real inquiry consequently is whether the facts proved justified a recovery for malicious prosecution. If they did, the plaintiff was entitled to a verdict, notwithstanding he might not have been entitled to one upon the cause of action for false imprisonment.

When the defendant took the plaintiff into custody there were but two incriminating circumstances against the plaintiff. These were the want of resemblance between the plaintiff and the photograph, and the existence of scars upon his face, while the certificate stated that the person named in it had no physical marks or peculiarities for identification. According to the evidence of the photographer, the photograph was a reasonably correct picture of the plaintiff; and, in view of its indistinctness, the absence of any appearance of scars did not seriously impeach its authenticity. The first incriminating circumstance was therefore of little significance. If the plaintiff did not receive the wounds until after he had obtained his certificate, the second incriminating circumstance was of no weight. The defendant did not inquire of the plaintiff, or endeavor otherwise to ascertain, when they were received. And, if the scars were on the plaintiff's face when he applied for the certificate, the collector might not have noticed them, or thought them sufficiently conspicuous to be noted in the certificate. Thus, in any view, the second incriminating circumstance was of no more value than the first. With no other evidential facts that the plaintiff was an offender, a just consideration for his rights demanded some effort by the defendant to verify his suspicions. It must be presumed that a duplicate of the photograph was on file with a copy of the certificate with the collector at New York; yet the defendant did not attempt to procure a comparison of the two. Nor, so far as appears, did he make the slightest effort to get information about the antecedents of the plaintiff. We cannot doubt that the case justified the conclusion that the defendant acted hastily and overzealously in making the arrest, and allowed his suspicion to overmaster the discretion and judgment which he ought to have exercised.

After the investigation made at the custom house by Mr. Collins and the immigration commissioner, there was sufficient evidence of probable cause, because the contradictory statements of the plaintiff, and the discrepancy between his height and that given in the certificate,

Digitized by Google

were facts then developed of a sufficiently incriminating nature to warrant a judicial investigation. But the defendant was responsible for the arrest, and for putting in motion the criminal proceeding which subjected the plaintiff to imprisonment and compelled him to establish his innocence; and he cannot escape the consequences because, as it turned out, there was a stronger case against the plaintiff when he was put on trial before the commissioner than there was when the proceedings were initiated.

In an action for malicious prosecution the jury are at liberty to infer malice from facts that establish want of probable cause. It was not necessary, therefore, for the plaintiff to prove that the defendant was actuated by any personal ill will towards him in instituting the criminal proceeding.

We conclude that the evidence justified the jury in finding want of probable cause, and authorized them to infer malice; and, it having been shown that the criminal charge against the plaintiff had terminated by his acquittal, all the elements of the cause of action for malicious prosecution were complete. It follows that there was no error in the rulings of the trial judge.

The trial judge, in ruling as he did, expressed the opinion that the question of probable cause was one for the jury. When facts are undisputed, and but one inference can be drawn from them, that question is one of law for the court. It may be that the photograph which was in evidence sufficiently demonstrated that the plaintiff was not its subject to authorize the jury to disregard the testimony of the photographer, and prefer their own judgment to his opinion. In that view, the question of probable cause may have been one to be submitted to the jury under proper instructions, and this was probably what the trial judge meant. However this may be, the ruling was right. A correct ruling is never vitiated because a wrong reason may be assigned.

We find no error in the record, and the judgment is affirmed.

(94 Fed. 347.)

BREWER v. PENN MUT. LIFE INS. CO.

(Circuit Court of Appeals, Eighth Circuit. April 10, 1899.)

No. 1,141.

MORTGAGES—OPTION TO DECLARE DEBT DUE ON DEFAULT—RIGHT TO SUE AT LAW ON NOTES.

Notes, and a mortgage securing the same, executed at the same time, constitute a single contract, and a provision of the mortgage that, on the failure of the maker to perform any agreement contained in either the notes or mortgage, the entire debt may be collected, gives the holder the right, on default in the payment of interest, to declare the notes due for all purposes, and to collect them by suit in the ordinary form, as well as by foreclosure.

In Error to the Circuit Court of the United States for the District of Colorado.

The Penn Mutual Life Insurance Company, the defendant in error, brought a suit against Benn Brewer, the plaintiff in error, to recover a balance due on

Digitized by Google

a note for $20,000, which remained unpaid after certain foreclosure proceedings had been taken under a deed of trust which was given to secure the payment of the note. The note and deed of trust were executed on January 23, 1880, and the note was made payable in five years, with interest at the rate of 6½ per cent., which was payable half-yearly until the note was satisfied. On May 28, 1895, the payment of the note was extended by a written agreement until January 23, 1900, and the interest was reduced to 6 per cent., on condition that certain third parties who had acquired an undivided one-half interest in the mortgaged property would assume the payment of the note, and on the further condition that the interest on the note should be paid half-yearly, as before, and that $1,000 of the principal should be paid each year, beginning said payments on January 23, 1897, until January 23, 1900, at which latter date the whole of said note was to be paid. A default was made in the payment of the interest which became due on January 23, 1897, and thereafter, on April 13, 1897, the holder of the note declared the whole debt due, pursuant to a provision in the deed of trust or mortgage securing the note, which provided "that, if default be made in the payment of any one of the said interest notes at the time and place therein specified, or * * * in the payment of said principal note at its maturity, or if said party of the first part, his heirs * * * or assigns, shall fail to perform, fulfill, and keep all and singular the covenants, conditions, stipulations, and agreements herein or in said notes contained, * * * then, and in either such case, the said principal sum of twenty thousand dollars and all arrearages of interest may be collected at any time after ten days' notice, without any relief from any valuation, appraisement, or exemption laws." A sale was made by the trustee in the mortgage in the month of June, 1897, for the purpose of satisfying the amount due on the note, which left a balance due thereon of $3,329, for which sum the present suit was brought. To a complaint alleging, in substance, the foregoing facts, the defendant below demurred, upon the ground that the debt sued for was not due, and that the action was prematurely brought. The demurrer was overruled. The case was subsequently tried before the court without the intervention of a jury, and a judgment was entered in favor of the plaintiff below for the amount claimed in its petition, whereupon the defendant below brought the case to this court by a writ of error.

Charles D. Hayt, for plaintiff in error.

W. C. Kingsley, for defendant in error.

Before CALDWELL, SANBORN, and THAYER, Circuit Judges.

THAYER, Circuit Judge, after stating the case as above, delivered the opinion of the court.

By the terms of the principal note, the defendant below promised to pay "interest at six and one-half per cent. per annum from maturity until paid," the same to be paid half-yearly. The deed of trust contained a provision, above quoted, that, if the defendant failed to perform any agreement "in said notes contained," the principal sum named in the note and all arrears of interest "may be collected at any time after ten days' notice"; and the extension agreement of May 28, 1895, continued these stipulations in force by providing "that nothing herein shall in any wise or manner interfere with or modify any of the covenants or conditions which are contained in the trust deed heretofore given by the said Brewer for the security of the said loan, except as to the time of payment of the same and interest thereon, as hereinbefore provided." The case made by the plaintiff in its petition is thus brought within the exact language of the several stipulations aforesaid, the defendant having failed to pay the interest due on January 23, 1897, which was agreed to be paid in the principal note, and 10

Digitized by Google

days' notice having been given by the plaintiff, after said default, of its intention to collect all that was due. The only question, therefore, which requires consideration, is whether the agreement contained in the deed of trust that, in case of any default, the whole amount due on the notes might be collected after 10 days' notice, should be construed as an agreement that it might be collected by foreclosure proceedings only, or as an agreement that it might be collected by any appropriate form of procedure which the noteholder elected to pursue. This question has given rise to some conflict of opinion. It was early held in this circuit by the then Circuit Judge, now Mr. Justice, Brewer, that, where notes and a deed of trust securing the same are executed at the same time, they should be regarded as one instrument, and read together, and that, if a deed of trust contains a provision giving the holder an option in a certain event to declare the notes due in advance of the time specified on their face, such option, when lawfully exercised in the mode provided, should be regarded as rendering them due for all purposes, and not merely for the purpose of a foreclosure. Manufacturing Co. v. Howard, 28 Fed. 741. Since this decision it has been very generally regarded as establishing the rule in this circuit, the question being one of general law. Decisions in accordance with the views expressed in Manufacturing Co. v. Howard have been made in the following cases: Chambers v. Marks, 93 Ala. 412, 9 South. 74; Noell v. Gaines, 68 Mo. 649,—while views at variance therewith are to be found in the following cases: White v. Miller, 52 Minn. 367, 54 N. W. 736; McClelland v. Bishop, 42 Ohio St. 113; Owings v. McKenzie, 133 Mo. 323, 33 S. W. 802. It would serve no useful purpose to add to what has already been said on the question at issue in the cases above cited, and we shall refrain from doing so. In the case at bar the controversy is between the original parties to the note and deed of trust, the question as to the rights of indorsers in such cases, whatever the same may be, being in no wise involved. We accordingly adhere to the rule which has heretofore obtained in this circuit, holding in the present case that the right to collect the note which was given to the mortgagee by the terms of the mortgage in question in case the mortgagor made default in paying the interest thereon when it became due was a right to collect it by suit in the ordinary form, as well as by proceedings in foreclosure. Such was the view of the circuit court, and its judgment is hereby affirmed.

Digitized by Google

(94 Fed. 349.)

RAND et al. v. COLUMBIA NAT. BANK OF TACOMA, WASH., et al.

RAND v. TILLINGHAST.

(Circuit Court of Appeals, Eighth Circuit. April 17, 1899.)

Nos. 1,151, 1,152.

NATIONAL BANKS—STOCKHOLDERS—ESTOPPEL TO DENY LIABILITY FOR ASSESSMENT.

Subscribers to the capital stock of a national bank previously organized and carrying on business, who accepted certificates of stock representing a portion of the original capital stock, obtained by the bank in some manner from the former holders, are estopped, after the lapse of five years, during which they retained the stock, received two dividends, and paid one assessment thereon, to deny that they are stockholders, in a suit by the receiver to collect a further assessment, on the bank's insolvency, on the ground that they supposed they were purchasing a part of an issue of increased stock which the bank had voted to issue, but the issuance of which had not then been authorized by the comptroller.

Appeal from the Circuit Court of the United States for the District of Minnesota.

In Error to the Circuit Court of the United States for the District of Minnesota.

A. B. Jackson, for appellants and plaintiff in error.

Phillip Tillinghast, for appellees and defendant in error.

Before CALDWELL, SANBORN, and THAYER, Circuit Judges.

THAYER, Circuit Judge. These are two suits, one in equity and one at law, which grew out of the same transaction, and were tried together, and may therefore be disposed of by a single opinion, as they were by the trial court. 87 Fed. 520. In case No. 1,151, Alonzo T. Rand, Rufus R. Rand, and Kate Ogle, the appellants, sought to obtain a decree adjudging that they were not stockholders of the Columbia National Bank of Tacoma, Wash., hereafter termed the "Bank," and an injunction restraining the prosecution of certain suits at law which had been brought against them by Phillip Tillinghast, the receiver of said bank, to recover a certain assessment which had been levied against them as stockholders therein, the bank having become insolvent. Case No. 1,152, on the other hand, is an action at law, which was brought by Tillinghast against Rufus R. Rand to recover an assessment which was levied against him, and is one of the actions at law the prosecution of which the appellants, in case No. 1,151, sought to restrain. The law case was tried without the intervention of a jury, in connection with the equity case, and the court made a special finding of the facts, which must be accepted as conclusive. From this finding it appears, in substance, that on July 13, 1892, the Columbia National Bank was a duly-organized national bank, having a capital stock of $200,000, which had been subscribed, and the amount thereof duly paid in; that on the preceding 12th day of January, 1892, the stockholders of said bank had passed a resolution to increase the capital stock of the bank from $200,000 to $500,000, and had provided in the resolution that, as

Digitized by Google

new capital was paid in to the amount of $50,000 or more, the president or cashier be authorized to certify the fact to the comptroller of the currency, and to continue to so certify until $300,000 had been paid; that on July 18, 1892, Alonzo T. Rand, the plaintiff in error, was in Tacoma, and while there was solicited to become a subscriber to the stock of the bank, and was at the same time informed by an officer of the bank, either its president, vice president, or cashier, that they were increasing the stock of the bank, and would like to have him become a subscriber, and that he subsequently signed three subscription papers, two of the same being for 50 shares each, and one for 100 shares, which subscriptions did not express on their face whether the stock to be delivered to the subscriber in pursuance thereof should be old stock, forming a part of the original capital of the bank, or whether it should be new stock, forming a part of the increase, which had not at that time been authorized by the comptroller, no certificate having been made that any portion of the increased capital had been paid in. The trial court further found that four stock certificates were issued by the bank on July 18, 1892, one being in favor of A. T. Rand, and the others in favor of Rufus R. Rand, Kate Ogle, and H. W. Brown, respectively, each of which certificates was in the following form, except as to the number of the certificate and the name of the shareholder:

"No. 147. Fifty Shares.

"State of Washington. Columbia National Bank of Tacoma, Washington.

"Capital Stock, $200,000.

"This certifies that A. T. Rand is the owner of fifty shares, of one hundred dollars each, in the capital stock of the Columbia National Bank of Tacoma, Washington, transferable only on the books of the bank, in person or by attorney, upon the surrender of this certificate.

"Tacoma, July 19, 1882. N. B. Dolson, Cashier.

"W. G. Peters, Vice President."

That, at the time these certificates were issued, the bank was in the habit of issuing other certificates of stock, representing new capital, which expressed on their face that they were for a part of the "increased capital," and did not show the amount of the capital of the bank; that the several persons to whom the certificates aforesaid were issued, to wit, A. T. Rand, R. R. Rand, and Kate Ogle, each accepted and paid for the stock so issued to them at the rate of $101 per share, and subsequently received two dividends thereon of 4 per cent. each, and also paid an assessment thereon, which was levied by the bank as late as August 10, 1895. The trial court also found that neither of the persons to whom the aforesaid certificates were issued were at all solicitous whether they received old stock or a part of the increased stock, and that this was not a material fact inducing the aforesaid subscriptions. In view of the aforesaid findings, the trial court further inferred that the stock which was issued to the several appellants on July 19, 1892, was a part of the old stock which had been acquired by the bank from some of its original shareholders, or in some other lawful manner, and that it was not a part of the proposed new issue. This seems to have been a reasonable deduction, in view of the fact that on July 19, 1892, no authority had been obtained to issue any of the new stock; also in

Digitized by Google

view of the fact that the form of the certificates which were issued to the appellants indicate that it was a part of the original capital, and that the bank was in the habit of issuing certificates in a different form, representing the increased or new capital. But whether the inference thus drawn was reasonable or otherwise is now immaterial, since it was essentially an inference of fact, and the conclusion reached by the trial judge is not open to contradiction, there being abundant evidence to support it.

This leaves for consideration by this court but a single question, namely, whether the receipt by the appellants of the stock in question without objection on their part, and the acceptance of two dividends thereon, and the payment of the assessment which was levied on them as shareholders on August 10, 1895, estops them from denying that they are stockholders in a suit brought by the receiver to recover an additional assessment. The trial court decided this question in the affirmative, and we are of opinion that such decision was clearly right. The fact, if it be a fact, that the appellants supposed that they were receiving a part of the increased stock, instead of certificates representing a part of the original capital, will not authorize them to deny their liability as stockholders after the lapse of five years; they having in the meantime exercised all the rights of shareholders, and accepted all the benefits flowing from that relation. This is especially true so far as the receiver is concerned, who is vested with all the rights of creditors of the insolvent bank. Scott v. Latimer, 60 U. S. App. 720, 33 C. C. A. 1, and 89 Fed. 843, 855, and cases there cited; Bank v. Newbegin, 40 U. S. App. 1–10, 20 C. C. A. 339, and 74 Fed. 135.

Having reached the conclusion last announced, it is wholly unnecessary to consider what might be the rights of the appellants if they in fact held a portion of the increased or new stock. That is a question which has been twice considered by the circuit court of appeals for the Ninth circuit in parallel cases, and the conclusion reached on both occasions was at variance with the position taken by counsel for the appellants. Bank v. Mathews, 29 C. C. A. 491, 85 Fed. 934, and Brown v. Tillinghast, 35 C. C. A. 323, 93 Fed. 326. The decree in the equity case and the judgment in the law case are each affirmed.

(94 Fed. 361.)

TOWER v. EAGLE PENCIL CO.

(Circuit Court of Appeals, Second Circuit. April 4, 1899.)

No. 132.

PATENTS—VALIDITY AND INFRINGEMENT.

The Tower patent, No. 378,223, for a penholder with a layer of cork, called a "sleeve," at its lower end, to form a cushion (supposed to be antinervous), construed, and *held* not infringed.

Appeal from the Circuit Court of the United States for the Southern District of New York.

Digitized by Google

This was a suit in equity by Levi L. Tower against the Eagle Pencil Company for alleged infringement of a patent for an improved penholder. The circuit court held that the patent was valid and infringed, and accordingly entered a decree for the complainant. 90 Fed. 662. From this decree the defendant has appealed.

Marcellus Bailey, for appellant.
W. S. Logan, for appellee.

Before WALLACE, LACOMBE, and SHIPMAN, Circuit Judges.

WALLACE, Circuit Judge. Error is assigned upon this appeal of the decree of the court below adjudging the validity, and the infringement by the defendant, of letters patent No. 378,223, dated February 21, 1888, granted to Levi L. Tower for a penholder.

The invention described and claimed in the patent consists in the means whereby the ordinary penholder is provided at the pen end with a layer of cork, called a "sleeve"; the object being to form a cushion (supposed to be antinervous) for the part held by the fingers and thumb in writing. Cork and various antinervous materials had been used for penholders; and the materials, except cork, had been used in the form of a thin sleeve upon the penholder to form a cushion for the fingers. The penholder of the British patent to Welch, of 1857, was of wood, surrounded by a metal tube at the pen end, and having a sleeve of rubber, velvet, leather, cloth, "or any other soft and flexible material," as the cushion. The penholder of the patent to Rodrigue was of wood, and had a rubber sleeve at the pen end for the cushion, which surrounded the tenon, and formed a square joint with the body of the holder at the shoulder of the tenon. As no tenon was used in the Welch penholder, the sleeve projected beyond the line of the rest of the penholder; making the holder thicker at the pen end than above. The Rodrigue sleeve did not project, but was on a line with the rest of the penholder, because he placed his sleeve directly upon the tenon, without interposing the metal reenforce tube of Welch. Cork being a more fragile material than rubber, leather, or other antinervous cushions, Tower, the patentee of the present invention, thought it desirable not only to use a re-enforce tube, but also to protect his sleeve from abrasion at both its lower and upper ends. He constructed his penholder like that of Rodrigue, substituting cork for rubber, interposing the re-enforce tube, and introducing special means for protecting the sleeve at each end. The means he adopted for doing this were modifications of those of Welch and Rodrigue. He employed the metal tube of Welch, and the tenon of Rodrigue, and surrounded the tube with a cork sleeve, as Welch had done with a velvet or leather sleeve; but he made his tube with projections at the pen end, and at the other end, instead of using the shoulder of Rodrigue, he made a peculiar joint, by making an annular recess in the shoulder, and forming his sleeve to correspond. He also used a slotted tenon, but this feature was not new, and does not enter into the invention claimed. The means of housing the cork sleeve, and protecting it from abrasion at the ends, are described in the specification as follows:

Digitized by Google

"A represents the main or body portion of the holder, constructed of wood or other desired material, and provided at the lower end with a round tenon, B, having a longitudinal slit, C, and an annular groove or short conical socket, D, formed in the body portion, A, at the intersection of the said tenon, B, with the body, A, as shown. Now, I provide this tenon, B, with a sleeve, E, formed of cork, having its upper end, F, conical, and fitted into the annular conical groove, D, whereby the thin, edge-like portion of the cork at this end of the sleeve is protected by the harder covering portion of wood forming such joint, as shown in Fig. 2. In order that the sleeve, E, of cork, may be pro-

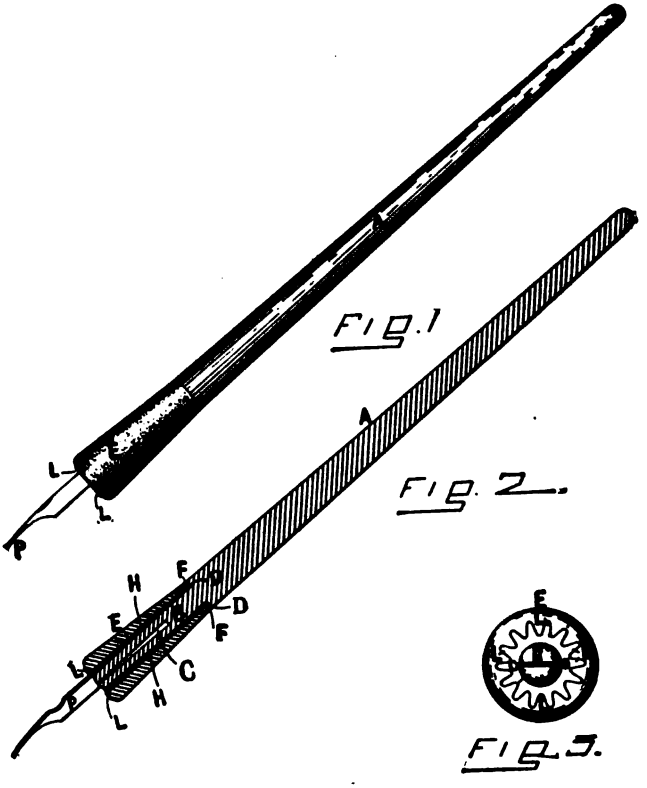

tected from abrasion when inserting the pen, P, in position in the holder, I provide a metal re-enforcement tube, H, which fits snugly upon the slotted tenon, B, and within the longitudinal opening formed through the said cork sleeve, E, and has its lower end portion formed into a series of radial points, L, which are turned outward over and upon the lower end of the cork sleeve, whereby the rigidity of the pen is secured within the cork sleeve, and the liability of its being broken is greatly diminished, as it is protected by the points, L."

The patentee then inserts in his specification the following disclaimer:

"I do not claim cork, or any other material, but limit my invention to the novel construction of the thin cork sleeve, re-enforced with a metal tube, and protected from abrasion at the ends, as set forth."

Digitized by Google

The claim is as follows:

"A penholder consisting of the body portion, A, provided with a tenon, B, having an annular socket or groove, D, provided with a cork sleeve, E, one end of which is fitted within the said groove, and its opposite end portion provided with a re-enforce metal tube, H, having a series of points, L, which contact with the end of the said sleeve, as shown; all being constructed and arranged substantially as described."

We agree with the court below that while the mere substitution of cork for rubber, leather, velvet, or other "antinervous" material, would not, in view of the prior use of cork for penholders, be sufficient to support the patent, there was patentable novelty in the means devised to strengthen and protect the new material so as to adapt it to practical and satisfactory use as a cushion. It required but slight modifications of existing penholders to devise these means, yet we cannot say that they were obvious changes, which could have been supplied without the exercise of any inventive thought.

We cannot agree with the court below that the penholder of the defendant is an infringement of the patent. It would be if it did not dispense with the peculiar joint between the sleeve and the body of the holder, which, by the specification and the terms of the claim, must be regarded as an essential feature of the patented invention. While the defendant's penholder does not have the series of radial points (forming practically a shoulder) at the lower end of the metal tube, it has a projecting flange or shoulder at that place which protects the sleeve from abrasion. In both, the devices perform the same office in the same way, and thus in every sense one is an equivalent for the other. The two penholders are differentiated, however, by the different means for housing and protecting the sleeve at its upper end. The means pointed out in the specification are an annular groove or short conical socket in the body of the penholder at the intersection of the tenon, and a sleeve conical at the end, and fitted into the annular groove so as to be covered and protected by the overlapping wood, thus forming a recessed joint. Instead of the joint of the patent, the penholder of the defendant has the square or unrecessed joint of the Rodrigue patent. This end of the sleeve is not, as in the penholder of the patent, "protected by the hard covering portion of wood forming such a joint." If this is a disadvantage, to that extent the defendant has not profited by the patented invention; but by dispensing with the joint the penholder can be produced at less expense, and to this extent the defendant obtains a countervailing advantage. The patent is limited, by the express terms of the claim, as well as by the description in the specification, to a penholder which embodies this special detail of construction. To infringe the claim the body portion of the penholder must contain "the annular socket or groove, D," and a sleeve, "one end of which is fitted within the said groove." The defendant's penholder contains neither. If it be said that the square joint in the defendant's penholder protects the upper end of the shield as efficiently as does the recessed joint of the patented penholder, the reply is that it was open to both the patentee and the defendant to adopt this form of joint. The patentee might have availed himself of the Rodrigue joint, but obviously supposed

Digitized by Google

that it would not suffice. The defendant concluded that it would, and, if he gained any advantages by adopting it, he is entitled to hold them. The narrow boundaries of the invention preclude a construction of the claim not strictly warranted by its terms.

The decree is reversed, with costs, and with instructions to dismiss the bill.

(94 Fed. 369.)

SUPREME LODGE, KNIGHTS OF PYTHIAS, v. ENGLAND.

(Circuit Court of Appeals, Eighth Circuit. April 10, 1899.)

No. 1,126.

1. REVIEW—FINDINGS OF FACT.
   It is the settled rule of the supreme court and the circuit courts of appeals that, where a case is tried by a federal court without a jury, the sufficiency of the evidence to sustain its general findings of fact cannot be considered by the appellate court.
2. JURISDICTION OF FEDERAL COURTS—FEDERAL CORPORATIONS.
   It is not the domicile of a corporation created by an act of congress which confers jurisdiction on the federal courts of suits to which it is a party, but the fact that it was so created, and that any suit by or against it arises under a law of the United States.

In Error to the Circuit Court of the United States for the Eastern District of Arkansas.

W. M. Hough (W. S. McCain, on the brief), for plaintiff in error.

J. M. Moore and W. B. Smith, for defendant in error.

Before CALDWELL, SANBORN, and THAYER, Circuit Judges.

CALDWELL, Circuit Judge. This action was tried below by the court, a jury having been waived by the parties. There was an agreed statement of facts, and also other evidence. At the close of the evidence the bill of exceptions recites that:

"On this evidence the plaintiff moved for judgment against defendant for the amount of the certificate, $3,000, and interest, which the court gave, over and against the objection of the defendant, to which defendant excepted."

The court made no special findings of fact. There was no demurrer to the evidence, no exceptions to the admission or rejection of evidence, and no declarations of law made by the court, and none asked by the defendant.

It is the settled rule of the supreme court of the United States and of this court that, when a case is tried by a federal court without a jury, the sufficiency of the evidence to sustain its general findings of fact cannot be considered by the appellate court. Hoge v. Magnes, 56 U. S. App. 500, 29 C. C. A. 564, and 85 Fed. 355, and cases there cited; Minchen v. Hart, 36 U. S. App. 534, 18 C. C. A. 570, and 72 Fed. 294. In Lehnen v. Dickson, 148 U. S. 71, 77, 13 Sup. Ct. 481, the supreme court declare with emphasis that:

"The duty of finding the facts is placed upon the trial court. We have no authority to examine the testimony in any case, and from it make a finding of the ultimate facts."

Digitized by Google

The jurisdiction of the court below is questioned because the plaintiff in error, although created by an act of congress, has its domicile in the District of Columbia. In Supreme Lodge v. Kalinski, 163 U. S. 289, 16 Sup. Ct. 1047, the supreme court failed to dismiss the case for want of jurisdiction; and although it is true, as claimed by counsel, that the question of jurisdiction was not raised, yet the statement of the case shows that it was originally brought in a state court, and removed to the federal court upon the ground that it was a federal corporation. The supreme court does not have to be moved to notice a question of jurisdiction. It is always on the alert for that question, and is quick to dismiss a case of which the lower court had no jurisdiction. It is highly improbable that the court overlooked the question. In Supreme Lodge v. Hill, 42 U. S. App. 200, 22 C. C. A. 280, and 76 Fed. 468, the court of appeals for the Fourth circuit held, and we think rightly, that the federal courts could entertain jurisdiction of suits against this corporation because it was created by an act of congress. It is not the domicile of a corporation created by an act of congress which confers the jurisdiction upon the federal courts, but the fact that it has been so created; and any suit by or against it arises under a law of the United States, and is therefore within the jurisdiction of those courts, under the present ruling of the supreme court of the United States. The judgment of the circuit court is affirmed.

(94 Fed. 373.)

PIKE v. GREGORY.

(Circuit Court of Appeals, First Circuit. May 11, 1899.)

No. 268.

1. CITATION—NECESSITY ON APPEAL—SPECIAL APPEARANCE.
   With reference to the rule that there is no necessity for issuance of citation where appeal is taken in open court, one who appears for the purpose of making a motion to dismiss, even though the motion relates to a want of jurisdiction and lack of proper service, is in court for all purposes relating to the disposition of the motion, whether on appeal or otherwise.
2. JURISDICTION AS BASIS OF MOTION TO DISMISS APPEAL.
   That the court below had no jurisdiction of the parties cannot be made the basis of a motion to dismiss an appeal.
3. SUBSTITUTED SERVICE IN ANCILLARY PROCEEDINGS.
   Service in ancillary proceedings on the attorney of record in the original cause is sufficiently supported by an order permitting such substituted service, on bill alleging that defendant is not an inhabitant of the district, and cannot be served with process and summons therein, and that he has an attorney appearing for him in the case to which the suit is ancillary, and asking that service be made on such attorney.

Appeal from the Circuit Court of the United States for the District of Massachusetts.

Thomas H. Talbot, for appellant.
Francis A. Brooks, for appellee.

Before PUTNAM, Circuit Judge, and WEBB and ALDRICH, District Judges.

Digitized by Google

PUTNAM, Circuit Judge. The principal facts to which this appeal relates, and the principles governing it, were stated by us in our opinion passed down March 13, 1897, in the same case, under the title of Gregory v. Pike, reported in 25 C. C. A. 48, 79 Fed. 520. Subsequent to the mandate which issued in accordance with that opinion, the complainant, by leave of the court below, amended her bill by adding thereto as follows:

"Said Charles A. Gregory, being a resident of Chicago, in the state of Illinois, as set forth in said bill, is not an inhabitant of this district of Massachusetts, and cannot be found therein, so as to be served with process and summons to appear as defendant in this suit; and at the same time said Gregory has an attorney appearing for him in this suit, and who appeared for him in said suit No. 2,170 from its institution to its termination, and appeared for said Gregory in sundry other suits, mostly in this court, brought by said Gregory concerning the matter in controversy in said suit 2,170, some of which are still pending, namely, Francis A. Brooks, of this city of Boston. Wherefore said Mary H. Pike prays that this court may order that notice of this suit and a summons to appear therein may be served on said Brooks, and that such notice, being thus duly served, may be held to be notice of this suit duly served on said Gregory."

Suit 2,170, referred to in this amendment, was the principal case, with reference to which we used the expression, in the opinion of March 13, 1897, that the proceedings now under consideration are undoubtedly ancillary in their nature. The circuit court allowed the amendment, and thereupon ordered that "substituted service be made on the attorney of record for Gregory in No. 2,170." Thereupon a subpœna issued and was duly served on Mr. Brooks. Subsequently thereto, Mr. Gregory filed a special appearance, and a motion to dismiss, of which the following is a copy:

"And now Charles A. Gregory, above named, not admitting the jurisdiction of the court in or over the above-entitled cause, and for the purpose of objecting to the exercise by the court of any such jurisdiction, comes and moves the court that the writ of subpœna issued out of the clerk's office of said court on the nineteenth day of May, A. D. 1897, which has not been served on him as by law required, may be quashed, and that said cause may be dismissed by the court for want of jurisdiction of the same.

"By his solicitor, F. A. Brooks, who appears specially for the purpose of raising the said question of jurisdiction, and that alone.

"F. A. Brooks, Solicitor for Gregory."

The court below thereupon entered a decree dismissing the bill, stating in the rescript accompanying the dismissal that "the motion in this case to dismiss the bill of complaint for want of proper service of subpœna is granted." Thereupon Mary H. Pike took an appeal in open court, which was duly allowed.

In this court Gregory seasonably made a motion to dismiss for the reasons that no citation ever issued, and that he was never made a party defendant to the suit in the circuit court, and never appeared therein, and also because Mary H. Pike, on the record, is a citizen of the state of Maine and himself a citizen of the state of Illinois, and because the only relief sought by Mary H. Pike is an injunction to restrain him from bringing or prosecuting certain suits, so that it was, therefore, within the discretion of the circuit court whether to grant or refuse such relief, and its refusal is not a proper subject of an appeal. The last ground of the motion was not urged at the

Digitized by Google

hearing, and clearly concerns the merits of the case, and is properly to be considered only after the parties are brought into court. The second ground is clearly insufficient, as this proceeding is ancillary in its nature, and, also, it could not be the basis of a motion to dismiss an appeal. The first ground for the motion is sufficiently met by the propositions of the appellant that, as the appeal was taken in open court, no citation was required, and that, inasmuch as Gregory had come into the circuit court for the purpose of making the motion to dismiss, even though it related only to want of jurisdiction and lack of proper service, he must be considered in court for all purposes relating to the disposition of that motion, whether on appeal or otherwise.

With reference to the merits of the appeal, we are unable to perceive wherein the appellant has not fully complied with all that was required by our opinion of March 13, 1897; and we think the circuit court must have been misled into making the order which it did by those portions of our former opinion which refer to the attempt of Mary H. Pike, on the former appeal, to maintain that the proceedings are in the nature of an intervening petition, and not of an original bill. In disposing of this appeal, we wish to state that we have in no manner considered the merits of the bill, or whether or not it can be maintained as an ancillary proceeding; but we hold only that, by the substituted service, the complainant has sufficiently brought Gregory before the circuit court to enable it to pass on all such matters, and all other like matters which the bill presents.

The decree of the circuit court is reversed, and the cause remanded to that court for further proceedings, and the costs of appeal are awarded to the appellant.

(94 Fed. 375.)

RICHARDSON et al. v. LOREE et al.

(Circuit Court of Appeals, Fifth Circuit. May 16, 1899.)

No. 769.

1. JUDGMENT—IMPEACHMENT IN EQUITY FOR FRAUD.

   A holder of bonds of a corporation, the value of which is impaired by a collusive decree, to which he was not a party, establishing other claims against the corporation as liens upon its property superior to the lien of its bonds, may maintain a suit to impeach such decree, as otherwise he would be without remedy.

2. EQUITY—DEMURRER TO BILL—MATTERS WHICH MAY BE CONSIDERED—ANCILLARY SUITS.

   A suit in equity in a federal court to impeach a former decree of such court, to which the complainant in the bill was not a party, for fraud and collusion, while ancillary to the suit in which such decree was rendered for purposes of jurisdiction, so that it may be entertained without regard to the citizenship of the parties, is an original suit, in a chancery sense; and, in passing on a demurrer to the bill which states the facts, the court cannot look into the record of the former suit, except so far as it is made a part of the bill, nor can such record be brought before the court by any averments or recitals in the demurrer.

Digitized by Google

Appeal from the Circuit Court of the United States for the Western District of Louisiana.

The bill was filed on April 5, 1898. A general demurrer was filed, which was sustained by the circuit court, in a decree dismissing the bill. The bill is by F. L. Richardson, a citizen of the state of Louisiana, as receiver of the American National Bank, and Edward Weil and Sumpter Turner, citizens of the state of Louisiana, as syndics of the insolvency of M. Schwartz & Co., against William M. Loree, who describes himself as a citizen of Iowa; J. Bancroft Ellis, alleging himself to be a citizen of Leicester, England; the Teche Railroad & Sugar Company, Limited, a corporation organized and domiciled in the state of Louisiana; Seaman A. Knapp, a citizen of the state of Louisiana; the Louisiana & Southern States Real-Estate & Mortgage Company, Limited, a corporation organized under the laws of Louisiana, and domiciled in that state. The bill charges that complainants, in their representative capacities, hold the mortgage or debenture bonds of the Teche Railroad & Sugar Company, Limited, secured by first mortgage on all the property of said corporation, the commercial firm of M. Schwartz & Co. holding 5 of said mortgage bonds; that orators, in their representative capacities, hold 25 of said mortgage bonds, aggregating in English money 1,250 pounds sterling, and in American money $6,250; that defendants had fraudulently and collusively combined and confederated, upon false and fictitious claims, to secure possession, under cover of judicial process, of the property of said railway company, using improperly and fraudulently the jurisdiction of the said circuit court; that in furtherance of said combination and conspiracy, and falsely alleging the jurisdiction of the circuit court, the said Loree, upon a false and fictitious claim, brought a bill of complaint for moneys had and received; that said Loree never at any time had any business relations with said company or its officers, except in furtherance of the conspiracy conceived by him; that he was a person interposed for the purpose of creating and investing the court with jurisdiction; that the claim sued upon by him for materials furnished was due, if to any one, to Seaman A. Knapp and the Louisiana & Southern States Real-Estate & Mortgage Company, Limited, and that any assignment or transfer of the claim to Loree was collusive and fraudulent, and for the purpose of creating jurisdiction; that said Loree was without interest in the matter, and his invocation of the powers and process of the court was a fraud upon the court and its jurisdiction; that contemporaneously with the filing of the said Loree bill, and in furtherance of said conspiracy, the solicitor, acting for him, also filed a cross bill in behalf of J. Bancroft Ellis, as the alleged trustee of the notes and mortgage bonds given by said company as security for the debenture bonds; that said J. Bancroft Ellis was at no time requested by the mortgage bondholders to file said cross bill, or to take measures looking to the protection of their interests, and that, in filing said cross bill, he did so under the direction of Seaman A. Knapp and those combining with him to obtain possession of the corporate property of said company; that, as appears by the record, contemporaneously with the filing of the Loree bill and the cross bill of Ellis service of subpœna was accepted by the company, appearance entered, delays waived, motion for a receiver immediately presented, accompanied by an affidavit of Bradford Knapp, brother of said Seaman A. Knapp, as secretary of the corporation, and the consent of the corporation to the appointment of a receiver; that, the proceeding being apparently one by consent, the court made the appointment; that said parties defendant, taking advantage of the conscience of the court, proceeded by consents to enter up orders looking to the disposition of the property and the settlement of the estate, in the interest of those who had combined and confederated to wrong and injure the creditors of the corporation, without calling upon the court for any official or independent action, the effect of which was to despoil the creditors of the corporation, with only the shadow of judicial indorsement for their protection; that the entire proceeding was one in furtherance of the scheme to spoliate the creditors; that by consent a decree was entered, based upon the report of the master, under and by terms of which decree the mortgage or debenture bonds were fraudulently subordinated to the claims of Loree and the Louisiana & Southern States Real-Estate & Mortgage Company, Limited, when they should have been sub-

Digitized by Google

ordinated only to such receiver's certificates and charges as inured to the benefit of the property, or as had gone into the hands of third parties in good faith; that by consent, and based upon the report of the master, who was acting under the instructions of the solicitor for the complainant, a judgment was entered in favor of William M. Loree for $23,648.64, with interest, to operate as a first lien, superior to all other liens, mortgages, or privileges, and subordinate only to the receiver's costs and charges; that a decree was also entered in favor of the Louisiana & Southern States Real-Estate & Mortgage Company, Limited, for the sum of $117,813, with interest, which was declared to be a lien prior and paramount to all others upon the real estate, except the receiver's costs and charges (a copy of said decree is annexed as an exhibit to the bill); that by consent receiver's certificates were authorized and issued on representations that the same were to operate the railway, the fact being suppressed from the court that said certificates were issued, not for the purpose of operating the road alone, but of cultivating a sugar plantation owned by the corporation,—a business at all times extremely hazardous, and the operation of which the court was without power or authority to supervise, it being simply a private enterprise, without any public or quasi public duty; that the granting of these decrees in favor of said Loree and said Louisiana & Southern States Real-Estate & Mortgage Company, Limited, aggregating the sum of $141,000, together with the receiver's certificates in the sum of $40,000, and the charges and costs of administration, and all of which, under the decrees, are preferred to the mortgage bonds held by complainants, practically destroyed the only security that they had; that alleged indebtedness to the Louisiana & Southern States Real-Estate & Mortgage Company, Limited, was subordinate in rank to the mortgage bonds held by complainants, and had in fact been discharged by stock of the said railway company issued to the holders of said alleged indebtedness, who were not entitled to any decree whatever on said alleged indebtedness; that the receiver's certificates issued were used, not for the purpose of advantaging and improving the property, but were employed extravagantly, in operating a sugar plantation, and the results of which were disastrous and entailed heavy losses; that complainants, immediately upon their appointment, exercised reasonable diligence in examining into the affairs of said Teche Company, and thereby discovered the fraudulent and collusive combination charged in the bill. Upon the charges thus made in their bill of complaint, complainants prayed: For the postponement of the sale then advertised, and a permanent injunction against the sale or disposition of the property and merchandise. That the receiver be directed to file a complete inventory of the property of the company which went into his hands. That the receiver file a specific account for all moneys received by him, from whatever source, and of all disbursements and moneys expended. That he file a detailed statement of his administration as receiver, showing what improvements had been made since his possession, and whether such improvements were permanent in character; the amount of receiver's certificates he issued; to whom; for what purpose; if sold for money, at what price; if exchanged for commodities, at what rate; how the moneys or commodities received in exchange were applied,—whether in permanent improvement of the property, or the cultivation of the sugar plantations. And that, after hearing, a decree be entered annulling all orders, judgments, and decrees entered by consent, and dismissing the bill of Loree and the cross bill of J. Bancroft Ellis, on the ground that the jurisdiction was fraudulent and collusive,—and this without prejudice to the bona fide creditors whose debts were contracted by the receiver, and which inured to the benefit or improvement of the property,—and for such other and further relief as the equity of the case might require. The bill exhibits the said decrees alleged to be fraudulent, but does not exhibit any other part of the record in the case. It is assigned as error that the court sustained the demurrer and dismissed the bill.

H. L. Lazarus and J. N. Luce, for appellants.
A. H. Leonard, for appellees.

Before PARDEE, McCORMICK, and SHELBY, Circuit Judges.

Digitized by Google

SHELBY, Circuit Judge. The complainants own $6,250 of the bonds of the Teche Railroad & Sugar Company, which are secured by mortgage on the property of the company. In a case pending in the United States circuit court for the Western district of Louisiana, according to the averments of the bill, William M. Loree has obtained a decree against the company for $23,648.64, and the Louisiana & Southern States Real-Estate & Mortgage Company, Limited, has obtained a decree for $117,813. These decrees were rendered in the same suit. The complainants in this case were not parties to that suit. They had no opportunity to defend against the decrees. The decrees were obtained by collusion between the parties to the suit. The company did not owe Loree anything, and had never dealt with him in any way. It had been indebted to the Louisiana & Southern States Real-Estate & Mortgage Company, Limited, but had paid its indebtedness. So that both judgments were unjust, and obtained by fraudulent collusion between the parties, and by an imposition on the court. These statements, for the purpose of considering the demurrer, must be taken as true. These decrees are made preferred claims, and the effect of them is to render worthless the bonds held by the complainants. It must be regarded as well settled that a stranger to a suit, who, if a judgment therein were given full credit and effect, would be prejudiced in regard to some pre-existing right, is permitted to impeach the judgment. Being neither a party to the action, nor entitled to manage the cause or appeal from the judgment, he is allowed by law to impeach it; otherwise, he would be without remedy. 2 Freem. Judgm. (4th Ed.) §§ 335, 505a, 512; Pacific R. Co. of Mo. v. Missouri Pac. Ry. Co., 111 U. S. 505, 4 Sup. Ct. 583; Sayre v. Land Co., 73 Ala. 85; Bergman v. Hutcheson, 60 Miss. 872; Carey v. Railway Co., 150 U. S. 171, 14 Sup. Ct. 63; Schuster v. Rader, 13 Colo. 329, 22 Pac. 505; Palmer v. Martindell, 43 N. J. Eq. 90, 10 Atl. 802; Edson v. Cumings, 52 Mich. 52, 17 N. W. 693.

In the printed argument filed by counsel for the appellees it is stated that the demurrer was argued before the circuit court on the theory that this suit was ancillary to the case of Loree against the Teche Railroad & Sugar Company. "That record, however," counsel adds, "is not before this court now, and, of course, the reasons referred to do not appear on the face of the transcript as it has been brought to this court." It is suggested that this court "cannot properly decide this case without that record." No motion is made for a writ of certiorari, for manifestly that could not be granted. The bill in this case did not make the record in the case of Loree against the Teche Railroad & Sugar Company a part thereof. It only made the decree in that case an exhibit. It is true that the case at bar, for the purposes of the jurisdiction, is ancillary to the case referred to, but in other respects it is an original bill. Upon this question the court, in Pacific R. Co. of Mo. v. Missouri Pac. Ry. Co., 111 U. S. 522, 4 Sup. Ct. 592, said:

"On the question of jurisdiction the suit may be regarded as ancillary to the Ketchum suit, so that the relief asked may be granted by the court which

Digitized by Google

made the decree in that suit, without regard to the citizenship of the present parties, though partaking so far of the nature of an original suit as to be subject to the rules in regard to the service of process which are laid down by Mr. Justice Miller in Pacific R. R. v. Missouri Pac. Ry. Co., 1 McCrary, 647, 3 Fed. 772. The bill, though an original bill, in the chancery sense of the word, is a continuation of the former suit, on the question of the jurisdiction of the circuit court. Minnesota Co. v. St. Paul Co., 2 Wall. 609, 633."

In the case last quoted (Pacific R. Co. of Mo. v. Missouri Pac. Ry. Co., 111 U. S. 505, 4 Sup. Ct. 590), an effort was made to have the court, in deciding a demurrer, refer to records not made a part of the bill. The court held that, as the bill charged that the foreclosure decree was obtained by fraud and collusion,—the facts being stated in the bill,—a demurrer to it must be overruled. On the question of examining the record in the case in which the alleged fraudulent decree was rendered, the court said:

"We are of the opinion that this court cannot consider anything which is not contained in the bill and the exhibits which are annexed to it, and that it cannot look into anything otherwise presented, as the files and records of the Ketchum suit, or of any other proceedings in any court, for the purpose of determining the questions arising on the demurrers to this bill."

The fact that these records were placed before the court on the trial of the demurrer, and cited in the argument, as stated in the briefs filed here, may have unintentionally led the learned judge who presided in the circuit court to believe that such record was a part of the bill to which the demurrer was addressed; but the record in that case does not appear in the transcript here, and is no part of the bill in this case. The allusion to and use of the records in the demurrers cannot change the result, even if the demurrers had, in the writing, referred to them; for it is a fundamental principle of pleading that a demurrer must be based exclusively upon matter apparent on the face of the bill. The objection must be to matter in the bill, or because of the omission of matter that should be inserted. If the demurrer recites facts not in the bill by way of defense, it is called a "speaking demurrer," and the new facts cannot be considered. A defendant is not permitted to make up the complainant's case for him. If the defendant needs for his defense other facts, he must file either an answer or plea. 1 Beach, Mod. Eq. Prac. § 226; 1 Daniell, Ch. Prac. (2d Am. Ed.) 679, marg. p. 656; 6 Enc. Pl. & Prac. 393.

In Stewart v. Masterson, 131 U. S. 151, 9 Sup. Ct. 682, it was held:

"A demurrer to a bill in equity cannot introduce as its support new facts which do not appear on the face of the bill, and which must be set up by plea or answer. * * * Where there is matter in the bill which is properly pleaded, and is properly ground for equitable relief, and requires an answer or a plea, a demurrer to the whole bill will be overruled."

The decree of the circuit court is reversed, and the case is remanded to that court, with directions to overrule the demurrer, with costs, and to take such further proceedings in the suit as shall be proper, and not inconsistent with the opinion of this court.

Digitized by Google

(94 Fed. 380.)

LANSING et al. v. STANISICS et al.

(Circuit Court of Appeals, Eighth Circuit. April 10, 1899.)

No. 1,100.

REVIEW—CONFLICTING EVIDENCE—FINDINGS OF FACT.

The findings of the chancellor on a question of fact will not be disturbed, unless clearly shown to be against the weight of evidence.

Appeal from the Circuit Court of the United States for the District of Nebraska.

Suit by Theodore Stanisics, as trustee, against James F. Lansing and Emma Lansing, to foreclose a mortgage. Judgment for plaintiff, and defendants appeal. Affirmed.

Lionel C. Burr (Charles L. Burr, on brief), for appellants.

Alfred W. Scott, for appellees.

Before CALDWELL, SANBORN, and THAYER, Circuit Judges.

CALDWELL, Circuit Judge. The appellee filed in the court below his bill to foreclose a mortgage on lots in Lincoln, Neb., given to secure a note for $2,000, and $41.20 taxes. The appellants answered that, after the execution and delivery of the note and mortgage, they were altered and changed by inserting in each instrument the words "of Chicago, Ill.," and "in gold coin." The connection in which these words occur in the instrument is this: The note reads:

"On the second day of April, 1898, I promise to pay Theodore Stanisics (trustee), *of Chicago, Ill.*, or order, two thousand (*in gold coin*) dollars."

It is claimed the italicized words are interpolated. The plaintiff denied that the instrument had been altered. The evidence on the issue thus raised is conflicting. The learned chancellor of the circuit court found the issue in favor of the plaintiff, and decreed a foreclosure of the mortgage. The finding of the chancellor in the lower court on a question of fact is presumptively right, and will not be disturbed unless the appellate court can clearly see that it is opposed to the weight of evidence. Snider v. Dobson, 40 U. S. App. 111, 21 C. C. A. 76, and 74 Fed. 757. We have read very carefully all the evidence in this case, and are not able to say that the lower court erred in its finding; indeed, we think its finding is supported by the weight of the evidence. The decree of the circuit court is affirmed.

Digitized by Google

(94 Fed. 442.)

RICHARDSON v. LOUISVILLE BANKING CO. OF LOUISVILLE, KY.

(Circuit Court of Appeals, Fifth Circuit. May 16, 1899.)

No. 813.

1. BANKS AS CORRESPONDENTS—COLLECTIONS—CONTRACTS.
In response to letters soliciting an account and making an offer of services for the care of business in its neighborhood, a bank wrote, "If we understand your proposition, you agree that you will take from us all items on [neighboring states], crediting our account with the total of our letter on receipt at par, and remitting New York at par the year round on our balance in excess of $10,000." The correspondent was directed to advise of collections by the collection number of the remitting bank, so that they could be checked without difficulty. Each letter of advice contained the passage: "I inclose for collection and ..... Please advise collection by number, and return immediately if not honored." The list of items frequently directed protests, which directions were followed, and immediately on such protest the amount of such item and protest fees were charged back to remitting bank. Some items were charged with the note "Held," probably meaning held for future direction. Of many of the items the remitting bank was the mere mandatary for collection. *Held*, that the contract was one for collection of the items forwarded, and not of purchase, and the forwarding bank was entitled to all items not collected before suspension of the collecting bank, and afterwards collected by subagents, and traced to the possession of the receiver appointed to wind it up.

2. NATIONAL BANKS—COLLECTIONS—IDENTITY OF FUNDS.
Where it is not shown that a certain collection made by a receiver of an insolvent national bank was forwarded by a correspondent of the bank, nor included in the list of items sent, it is not sufficiently traced; and this though the receiver testified that the item was collected for the forwarding bank.

3. NATIONAL BANKS—RECEIVERS—PAYMENT OF INTEREST.
An order directing payment of interest by the receiver of a national bank from date of judicial demand is erroneous, as funds coming into the hands of a receiver are turned over to the comptroller, and could not earn interest, and any payment of interest would necessarily be taken from some other trust fund; and this particularly where the involved circumstances of the case made it impossible to pay over the amount without investigation and an accounting.

4. RECEIVERS—DECREE—UNDUE LIMITATIONS.
A decree which commands the receiver of an insolvent national bank to pay over a large sum of money within 10 days, where, as a matter of fact, and in accordance with law, the funds are in the custody of the comptroller of the currency, unduly limits the time for satisfying the decree, and might result in the receiver being in contempt for not paying over moneys which are not within his control.

Appeal from the Circuit Court of the United States for the Eastern District of Louisiana.

On the 5th of March, 1895, the American National Bank made a written proposal to the Louisville Banking Company as follows:

"Gentlemen: As we have not the pleasure of an account from you, and being in a position to serve you to our mutual advantage, we beg leave to offer you our best services for the care of any business you have in this section, assuring you of our very best attention to your interest. If you will carry an average balance with us of $10,000, we will take your items on Louisiana,

Digitized by Google

Mississippi, Georgia, Alabama, and Texas, crediting your account with total of your letter on receipt at par, remitting New York as directed at the same rate the year round. On balance in excess of $10,000 we will allow 3% per annum interest. Awaiting the favor of your views on the above, we are,

"Yours, very truly, W. W. Girault, Cashier."

The following correspondence ensued:

"March 7, 1895.

"W. W. Girault, Esq., Cashier American National Bank, New Orleans, La.—Dear Sir: Your favor of the 5th inst. is received, and contents carefully noted. In reply, we beg to say that for some years past our Louisiana business has been handled for us by the Union National of your city. The Union National has treated us with great liberality, but we have never enjoyed the advantages which I understand your proposition to offer us. We would not wish to maintain a balance in New Orleans upon an interest basis, but, if we understand your proposition, you agree that you will take from us all items on the states of Louisiana, Mississippi, Georgia, Alabama, and Texas, crediting our account with the total of our letter on receipt at par, and remitting New York at par the year round on our balance in excess of $10,000. If we understand from this that you would remit our balance daily direct to our New York correspondent, advising us of the amount remitted, in excess of $10,000 to be maintained in your hands, it is a proposition which we are ready to seriously consider. If this is the proposition, therefore, you mean to submit to us, will you be kind enough to state it to us in distinct terms, and whether, if we enter into such an agreement, we may consider it in the nature of a contract to be binding for not less than one year. We would not care to disturb the very pleasant relations we have now existing, if for any cause they were liable to be disturbed after a short trial of your proposition might be put into effect. Of course, there are some points in all the states you name where we have reciprocal relations, and which we will continue to handle as we do now, but your proposition would be very useful to us, and would enable us to concentrate a great deal of zigzag channels.

"Yours, truly, John H. Leathers, Cashier."

"American National Bank.

"New Orleans, March 9th, 1895.

"John H. Leathers, Esq., Cashier, Louisville, Ky.—Dear Sir: Replying to your esteemed favor of the 7th inst., our proposition of the 5th inst. is intended to cover the period of one year, and, if mutually satisfactory at the end of that time, will be happy to extend again. On balance in excess of $10,000, we will allow you 3% per annum interest; but, if you do not care to carry a balance above that amount, we will make daily remittance of your balance over $10,000 direct to your New York correspondent, and advise you. We have extended you a very liberal par list, and I am sure can transact any business that you might be pleased to intrust to us in a manner that will meet with your entire satisfaction. Hoping to hear from you favorably, we are,

"W. W. Girault, Cashier."

"March 11, 1895.

"W. W. Girault, Esq., Cashier American National Bank, New Orleans, La.—Dear Sir: Your favor of the 9th is received, and contents fully noted. In reply, I beg to say that we accept the proposition so contained in the 5th inst., and to cover the period of one year from this date, to be continued at the end of that time if mutually satisfactory. We commence sending you to-day on the basis as proposed. We will thank you to remit your balance daily, at least for the present, in excess of ten thousand dollars, which amount we are to carry with you, to the Hanover National Bank of New York; advising us daily of the amount remitted. We will ask you to be good enough to instruct the proper department in your bank to carefully advise our collections by our number, that we may have no difficulty in checking them properly. The service you propose to render is certainly a very liberal one, and we trust that you will be able to do so with profit and pleasure to yourselves; and we very cheerfully agree to

Digitized by Google

maintain the balance of $10,000 in your hands, in view of the service you offer us. Trusting that the arrangement may be mutually profitable, pleasant, and satisfactory, we are, John H. Leathers, Cashier."

The two banks did business under the contract included in the foregoing correspondence, without any change or modification, for the period of one year, during which time the Louisville Banking Company forwarded items invariably with the following direction:

"American National Bank, New Orleans, La.—Dear Sir: I inclose for collection and ..... Please advise collections by number, and return immediately if not honored."

On receipt of which the American National Bank gave credit on its books to the Louisville Banking Company for the total sum of the items forwarded, and remitted daily the balance on its books to the credit of the Louisville Banking Company in excess of $10,000.

In the month of March, 1896, the two banks modified their contract, as shown by the following correspondence:

"American National Bank.

"New Orleans, La., March 14, 1896.

"John H. Leathers, Esq., Cashier Louisville Banking Company, Louisville, Ky.—Gentlemen: Replying to your favor 12th inst. We regret exceedingly that our proposition of the 9th inst. does not meet your views, in the matter of continuing your account. We appreciate the business you send us very highly indeed, and are unwilling to have it diverted to other channels; but many of the points you send us cost us exchange now, and we thought a weekly remittance of your entire balance at a fair rate would be satisfactory. At any rate, we want you to stay with us, and are willing to continue on the old basis, except, instead of remitting daily, we will remit weekly at par. Hoping this will settle the matter to your satisfaction, we remain,

"Yours, truly, W. W. Girault, Vice President."

"Mar. 16/96.

"W. W. Girault, Vice President American National Bank, New Orleans, La.—Dear Sir: Your favor of the 14th just received, and contents noted, and the proposition you now submit is entirely satisfactory. We do not desire ourselves to make any change in our New Orleans account, but you understand, of course, we have to make the very best arrangements we can, because, as we have said before, competition in the banking business has thrown the doors wide open, and we have been compelled in self-defense to make the best arrangements we can. Under the same arrangement as last year; you remitting our balance at par once a week instead of daily, all in excess of $10,000, which average balance we are to maintain in your hands, and we to have the option of sending you as we have been doing. We might suggest this to you, which we will be very glad to do, and may be of some service to you: We will use for you in whole or in part exchange on Louisville, Cincinnati, Chicago, and St. Louis, and you can use exchange on these points in place of New York whenever it may be convenient for you to do so; and probably at times this arrangement may be of advantage to you. We wish to say furthermore that, where we have dealings with a bank, we want to have them not only mutually profitable, but pleasant at the same time; and we will be ready at all times to help you in any territory we may be able to handle for you, possibly on better terms than you may now enjoy. We recognize the fact that you are doing a great deal for us in the territory you propose to handle for us. At the same time, we hope that with an average balance of $10,000 in your hands, and our offer to give you the option of remitting us our balance above that amount in the various cities named above, once a week, that it will compensate you. We trust that it will be agreeable to you to have it understood that this new arrangement shall continue in force for one year. We ask this because we like to feel settled in our arrangements with corresponding banks, and not feel that any day we may receive notice of its discontinuance. You can make any time in the

Digitized by Google

week you please. We should be glad, however, to have the day you will remit definitely fixed.

"Yours, truly, John H. Leathers, Cashier."

"American National Bank.

"New Orleans, La., March 18, 1896.

"John H. Leathers, Esq., Cashier Louisville Banking Company, Louisville, Ky.—Dear Sir: Yours of the 16th inst. to hand, and it is with pleasure that we note that we are still to be favored with your account. This new arrangement, entered into 16th, we are willing to continue for one year from that date. We note that it suits you just as well to receive our check on certain cities on New York, and this will [be] quite a convenience to us, and we are quite sure the business between us will be mutually satisfactory. Monday is the day we have selected to remit your excess balance, and, unless you prefer some other day, we will make Monday the day.

"Yours, truly, W. W. Girault, Vice President."

"March 30, 1896.

"W. W. Girault, Esq., Vice President American National Bank, New Orleans, La.—Dear Sir: Your favor of the 18th just received, and contents noted, and all right. The day you have selected to remit our excess balance is perfectly satisfactory. We untie [unite] with you in the hope that, with the modifications made in the old contract, our future relations will be mutually profitable and pleasant.

"Yours, truly, John H. Leathers, Cashier."

The two banks continued to do business under the modified contract from March, 1896, to the date of the suspension of the American National Bank, which bank closed its doors at 3 p. m. August 5, 1896, and never afterwards opened them for business. It announced its suspension by posting a notice thereof on the doors early in the morning of the following day, August 6, 1896. The same day, by direction of the comptroller of the currency, Edward I. Johnson, bank examiner, took possession of the books, assets, and property found in the bank. Subsequently the appellant, as receiver, took possession of the bank's property; receiving all sums that the bank examiner had collected in the interim. At the time the American National Bank closed its doors, it had received from the Louisville Banking Company various items in remittances of recent date, all of which had been credited on the books of the American National Bank to the Louisville Banking Company, but which items had not been collected by the bank and the proceeds thereof mixed with its funds. Many of these items were afterwards collected by the examiner and other collection agencies, and came to the hands of the receiver. The present suit is one to charge the receiver, as the trustee of the Louisville Banking Company, for all the items transmitted by the said bank to the American National Bank, which items at the date of the suspension of the American National Bank had not been collected by the said bank, but which were afterwards collected by the receiver; the same never having been mixed in, or become part of, the funds of the American National Bank, and now subject to full identification. The court below recognized the equity of the Louisville Banking Company's demands, and, after lengthy investigation, and hearing of much evidence, rendered a decree, as shown by the amended record, as follows:

"This cause came on to be heard on the pleadings, exhibits, and evidence adduced, and was argued by counsel, whereupon, and on consideration thereof, the court being satisfied that the relation of principal and agent existed between the complainant and the American National Bank of New Orleans; that said American National Bank was hopelessly insolvent, and that to the knowledge of the managing officers, the president and cashier, of said bank, on or before July 1, 1896; that said American National Bank was guilty of fraud in accepting the collections of complainant transmitted in said complainant's letters of July 25, 27, 28, 29, 30, and 31, and August 1 and 3, 1896; that complainant has traced the items for the collections therein set forth to the hands of the defendant, the receiver; and that the same have come into the possession of the said receiver, as follows, to wit:

Digitized by Google

Items on points out of New Orleans sent for collection in complainant's letter of August 3, 1896, collected by the examiner in charge, through the Louisiana National Bank, amounting to	$ 4,558 96
Items remitted from sundry banks to examiner after failure	1,584 59
Items in complainant's letter of July 31st, August 1st, and 3d, on New Orleans, collected through the examiner, and turned over to the defendant as receiver, including a United States treasury draft for $55, amounting to	986 63
Items collected by the bank examiner and said receiver through W. L. Moody & Co., amounting to	1,324 89
Items collected by the bank examiner and said receiver through the Farley National Bank of Montgomery, Ala., amount to	1,827 53
Items collected by the bank examiner and receiver through the Fourth National Bank of Atlanta, Ga., amounting to	1,045 97
All of which came into the hands of the receiver, amounting in the aggregate to the sum of	$11,328 57

—And that said amount of $11,328.57 constituted and is a trust fund in the hands of the defendant receiver as trustee for the complainant, and that the complainant is entitled to be paid the same, with interest, out of the funds which came into the hands of the defendant as such receiver: It is therefore ordered, adjudged, and decreed that the complainant have and recover from the defendant, F. L. Richardson, receiver of the American National Bank of New Orleans, the sum of $11,328.57, with interest at five per cent. per annum from the date of the filing of the bill of complaint herein, together with all costs, which is decreed to be paid within ten days by priority over all unsecured creditors; that for the balance of complainant's claim, to wit, $26,967.86, complainant be, and is hereby, recognized as a general creditor, entitled to participate pro rata with the depositors and other general creditors of said American National Bank of New Orleans in the distribution of its assets, and it is ordered, adjudged, and decreed that said defendant receiver pay to complainant such pro rata thereof as has been or may be paid to other unsecured creditors of said American National Bank."

F. N. Butler, for appellant.

E. M. Hudson, John D. Rouse, and Wm. Grant, for appellee.

Before PARDEE, McCORMICK, and SHELBY, Circuit Judges.

After stating the facts, the opinion of the court was delivered by PARDEE, Circuit Judge.

The main contention on this appeal relates to the construction of the correspondence passing between the two banks in 1895. The appellant, receiver of the American National Bank, contends that under the contract, as shown by the correspondence, whenever an item was remitted by the Louisville Banking Company to the American National Bank, and by that bank received and credited to the account of the Louisville Banking Company, said item then and there became the property, by purchase, of the American National Bank, and that the resultant relation between that bank and the Louisville Banking Company was solely that of debtor and creditor. On the other hand, the contention is that the correspondence was with the view to collections of commercial paper, and the arrangements made provided only for the collection of such items as should be remitted by the Louisville Banking Company to the American National Bank, and that when the American National Bank became insolvent and closed its doors the mandate for collection was

Digitized by Google

withdrawn, and the Louisville Banking Company became entitled to the return of all the items which had not been collected by the American National Bank. It is to be noticed that the first letter, written by the American National Bank, was inviting an account, and making an offer of services for the care of any business that the Louisville Banking Company might have in the New Orleans section. It is very far indeed from a proposition to purchase from the Louisville Banking Company all such items of checks and commercial paper as the said banking company might have in that locality. That the Louisville Banking Company had in mind solely the matter of collecting such items as it might have in the New Orleans locality fully appears from its letter of March 11, 1895, which, among other things, contains this passage: "We will ask you to be good enough to instruct the proper department in your bank to carefully advise our collections by our number, that we may have no difficulty in checking them properly." The arrangement for business provided for in the letters is entirely consistent with the theory that the provisions related wholly to a matter of collection, and it is inconsistent with any theory that it was a matter of sale and purchase which was in contemplation of the parties. The course of business between the two banks also shows clearly that the arrangement between the parties was understood to be one for collection solely. Each letter of advice forwarded by the Louisville Banking Company contained this passage: "I inclose for collection and ..... Please advise collections by number, and return immediately if not honored." The list of items as forwarded frequently contained instructions with regard to the protest, or waiver of the same, of specific items; and the books of the American National Bank show that, immediately on protest of any item, the item itself and the protest fee were charged back to the Louisville Banking Company; and in some instances items were charged back with the simple note "Held," probably meaning "held for further direction." Another fact to be noticed in this connection is that for a large portion, if not all, of the items forwarded, the Louisville Banking Company was not the owner of the same for sale, or with power to sell, but was the mere mandatary for collection. Counsel for the appellant bases his entire argument upon the language used by the Louisville Banking Company in its letter of March 7, 1897, as follows:

> "We would not wish to maintain a balance in New Orleans upon an interest basis, but, if we understand your proposition, you agree that you will take from us all items on the states of Louisiana, Mississippi, Georgia, Alabama, and Texas, crediting our account with the total of our letter on receipt at par, and remitting New York at par the year round on our balance in excess of $10,000."

—And argues therefrom that the American National Bank was compelled to take at par all the checks, notes, and drafts on persons or corporations in Louisiana, Mississippi, Georgia, Alabama, and Texas that the Louisville Banking Company should send, and that the American National Bank was obliged to pay the Louisville Banking Company for said checks, etc., on receipt of said items, and says that:

Digitized by Google

"If an agreement on the part of the American National Bank to take the checks, notes, and drafts in controversy from the Louisville Banking Company at par, and to pay the full face value thereof to the New York correspondent of the Louisville Banking Company, on receipt of said items, or within one week thereafter, is not a contract of sale, which passed the title of those items to the American National Bank, we fail to appreciate what constitutes a contract of sale. One of the parties agrees to sell a thing for a fixed price, and the other promises to buy the thing at the price agreed upon, or to pay for it upon delivery, or within a week from that time. All the essential elements of a contract of sale are thus contained in said agreement, while the conditions of a contract of agency are wanting."

We do not think that any such effect can be given to the clause referred to, and the promise and agreement to take all such items, crediting the account and forwarding at par, cannot be understood as contracting that the taking was by purchase; but the whole tone and purport of the letter are rather to the effect that the word "take," in that connection, meant to handle, collect, look after. "Checks deposited and credited as cash do not become the property of the bank, so that it takes the risk upon itself, even though the depositor has been allowed to check against the deposit before the paper is collected; and the depositor can recover the check or other paper, if it is still in the possession of the depositary." Morse, Banks (3d Ed.) § 586; Beal v. City of Somerville, 1 C. C. A. 598, 50 Fed. 647. See Newm. Bank Dep. p. 211, § 209. See, also, Balbach v. Frelinghuysen, 15 Fed. 675. As we construe the contract between the parties to be one relating to the collection, and not the purchase, of the items forwarded, the case is controlled by Bank v. Armstrong, 148 U. S. 50, 58, 13 Sup. Ct. 533. See, also, Evansville Bank v. German-American Nat. Bank, 155 U. S. 564, 15 Sup. Ct. 221. And the complainant below was entitled to a decree for all items not collected by the American National Bank before suspension, and afterwards collected by subagents, and traced to the possession of the receiver.

The appellant also contends that many of the items allowed for in the decree appealed from have not been sufficiently traced to identify the amounts as coming to the hands of the receiver. In regard to this we have made as full an examination as the importance of the case warranted, and find that the objections to none of the items allowed are well founded, except in regard to certain checks which were collected by Attorney Denegre on the 6th of August, aggregating $931.63, which were put in a separate envelope, and were turned over by Denegre to Examiner Johnson, and by Johnson handed intact to the receiver. In the testimony of Johnson, one item on the Louisiana National Bank of $135 was collected for account of complainant, while the evidence does not show that any such item was ever forwarded by the Louisville Banking Company, and it is not mentioned in any list of items forwarded by the Louisville Banking Company to the American National Bank. We think that this item is not sufficiently traced, and it should not have been included in the decree of the court below.

The decree of the court below allows interest against the receiver from judicial demand. We are of opinion that this was erroneous. The funds collected, coming into the hands of the receiver, turned over to the comptroller, could not earn interest, and any interest to

Digitized by Google

be paid thereon would be necessarily taken from some other trust fund. The involved circumstances surrounding the case made it improper, if not impossible, for the receiver to pay over the amount for which he is charged as trustee without an investigation and an accounting; and we think he was in no fault, but rather in the fulfillment of his official duties, in refusing to recognize complainant's demands until they were judicially determined. As a general rule in equity, trustees are not required to pay interest unless they are in fault in the management of the trust fund, or have so used the trust fund as to earn interest.

An objection is made to the form of the decree rendered in the court below, in that it commands the receiver to pay over to the complainant a certain large sum of money within 10 days, when, as a matter of fact, and in accordance with law, the receiver is not in personal custody of the funds in question, but the same are in the hands of the comptroller of the currency. The effect of the decree, as rendered, might be that the receiver would be in contempt for not paying over moneys which are not within his control. See Merrill v. Bank, 41 U. S. App. 529, 21 C. C. A. 282, and 75 Fed. 148.

Admitting these last-mentioned objections, the decree of the court below should be reversed, and the cause remanded, with instructions to enter a decree as follows: It is ordered, adjudged, and decreed that the complainant, the Louisville Banking Company, do have and recover from the defendant, Frank L. Richardson, receiver of the American National Bank, the sum of $11,193.59, which said receiver is ordered to pay, out of the funds which have come to his hands as receiver, within 30 days from the signing of this decree, and by priority over all unsecured creditors of the American National Bank, or that he do within said delay certify the same to the comptroller of the currency, with a copy of this decree; and it is further ordered and decreed that for the balance of complainant's claim, to wit, the sum of $27,102.86, the said banking company be, and is hereby, recognized as a general creditor, entitled to participate pro rata with the depositors and other general creditors of said American National Bank of New Orleans in the distribution of its assets; and it is ordered and decreed that the said defendant receiver pay to said Louisville Banking Company such pro rata thereon as has been or may be paid to other unsecured creditors of said American National Bank, or do certify the same to the comptroller to govern his action in the premises. And it is so ordered.

Digitized by Google

(94 Fed. 450.)

RICHARDSON v. CONTINENTAL NAT. BANK OF MEMPHIS, TENN.

(Circuit Court of Appeals, Fifth Circuit. May 16, 1899.)

No. 811.

BANKS AS CORRESPONDENTS—COLLECTIONS—CONTRACTS.

An agreement between two banks, by which one agrees to "handle" the items of exchange and commercial paper of the other within a certain territory, crediting the amount of such items to the account of the other on receipt, and under which the sending bank transmits such items as collections, indorsed payable to "any national or state bank," with directions to protest and return if unpaid, is an agreement for the making of collections only, and not of purchase and sale of the paper, and does not create the relation of debtor and creditor between the two banks as to items received and credited, but uncollected, at the time of the failure of the receiving bank; and any such items, or their proceeds, which can be identified as having come into the hands of its receiver, may be recovered by the sending bank.

Appeal from the Circuit Court of the United States for the Eastern District of Louisiana.

The object of this suit is to recover the proceeds of a large number of checks, drafts, notes, etc.,—generally denominated "items of exchange,"—transmitted between July 31 and August 4, 1896, inclusive, by the appellee, complainant, to the American National Bank for collection. These proceeds, it is averred, were collected after the failure of the insolvent bank, and came into the hands of the receiver, the appellant. This is not a suit claiming any preference on the general assets of the insolvent bank, but simply for recovery of the proceeds of certain items of exchange remitted to said bank, collected after its failure, and turned over to the receiver later, the ownership of which is asserted in this proceeding by the complainant below, appellee here. On August 5, 1896, the American National Bank closed its doors at 3 p. m., and never opened them again for business. The following day, by direction of the comptroller of the currency, Edward I. Johnson, bank examiner, took possession of the books, assets, and property found in the bank. Subsequently the appellant qualified as receiver and took possession of the bank's property. The only arrangement ever entered into by the complainant and the American National Bank, relative to the course of business between them, is embodied in and based upon the following two telegrams and complainant's letter, all dated July 31, 1896, to wit:

Telegram.

"Memphis, July 31, 1896.

"To American National Bank, New Orleans, La.: Have mislaid your recent letter. Please write us best terms handle our N. O., La., and So. Miss. business. May decide give you our business immediately.

"C. F. M. Niles, President."

Telegram.

"New Orleans, La., July 31, 1896.

"Continental National Bank, Memphis, Tenn.: Telegram received. Will credit cash items on points named, also Texas, at par on receipt. Start the account. We will please you. American National Bank."

Letter.

"Memphis, Tenn., July 31, 1896.

"American National Bank, New Orleans, La.—Gentlemen: I wired you this morning in regard to handling our account, and have received your wire, which is satisfactory. We will commence sending you our business to-day, and hope you will be able to handle it satisfactorily, and that you will find the account a profitable one. We are obliged to send you a somewhat large item on Baton

Digitized by Google

Rouge, but this will be an exceptional one, at least in amount, and I believe you will find our account a valuable one for your bank. We will endeavor to keep balances with you sufficient to justify any small expense in the collection of some interior items. Hoping that the arrangement we are entering into will prove mutually advantageous, and with best wishes, believe me,

"Yours, very truly, C. F. M. Niles, President."

It is true that the American National Bank wrote a letter on the same date, July 31, 1896, proposing, in effect, a modification of the telegraphic terms; but that letter, at all events, was never acted on by complainant, and it is extremely doubtful whether it ever reached Memphis in time to be considered before the failure of the bank. Accordingly, complainant commenced the same day to transmit to the American National Bank its items of exchange for collection, amounting to $5,020.88, and this was continued by further remittances of items for collection on August 1st, 3d, and 4th, the 2d of August falling on a Sunday. All letters containing remittances were headed as follows:

"Protest, unless otherwise instructed, and return at once. We enclose for collection and $\frac{\text{credit.}}{\text{returns.}}$

"Yours, respectfully, H. L. Armstrong, Cashier."

All the items contained in these letters were indorsed by a rubber stamp, as follows:

"Pay to the order of
"Any National or State Bank.
"[Date here.]
"Continental National Bank,
"H. L. Armstrong, Cashier."

This indorsement was for the purpose of vesting the said American National Bank with the necessary authority to receive and collect the same. The items transmitted in these four several letters by complainant apparently reached the bank on August 1, 3, 4, and 5, 1896, respectively, and were by the note clerk, conformably to the usages of that bank, credited to complainant on the books of the bank. Most of the items embraced in the first three letters, drawn on or payable by parties in New Orleans, were collected by the bank. Those items in the first two letters, payable at other points,—out of town items,—were sent by the bank to other banks for collection. All of the out of town items in the last two letters, of date August 3 and 4, 1896, were retained separate by the bank, and passed into the hands of the bank examiner, who took charge of the insolvent bank on August 6, 1896, and collected them through the medium of the Louisiana National Bank of New Orleans, for his account as examiner in charge. Some of the city items in these two letters were kept separate from the funds of the bank, and placed in the hands of the bank's attorney, Mr. George Denègre, on the morning of August 6, 1896 (before the bank examiner took charge), who collected the same, placed the proceeds in sealed envelopes, and indorsed thereon the amounts and the names of the parties for whose account he had so collected them. These identical proceeds, so collected by Mr. Denègre, were by him turned over, in those envelopes intact, to the examiner in charge, who delivered them to the receiver. All of the out of town items, transmitted in the first two of complainant's letters were sent by the bank, before its announced failure, to other banks, its correspondents, for collection: and they were by them collected after the failure of the bank, or if, in some few cases, they were collected before the failure, the proceeds were not forwarded to the bank by its subagents prior to the failure. Such collections were remitted to the examiner in charge, mainly, and by him paid over to the receiver, or they were, in a few instances, sent to the receiver directly.

On August 5, 1896, the board of directors of the bank met and adopted the following resolution:

"Special meeting at 8:30 p. m., Wednesday, August 5, 1896. A quorum of directors met at 7:30 p. m. this day. Present: Messrs. Gardes, Keiffer, Renaud, and Dumas. Mr. Gardes stated what had taken place during the day, and that the deposits received during the day had been set aside. The directors approved of this action, and instructed the president to hold the said deposits

Digitized by Google

separate and apart from the banking funds, and to examine carefully the condition of the bank, and report at a meeting to be held at 8:30 a. m., August 6. Duly moved, seconded, and adopted. H. Gardes, President."

The answer admits that the bank was hopelessly insolvent on August 5, 1896, but declares that defendant is not fully advised as to knowledge by the managing officers of the financial condition of the bank previously.

On hearing in the circuit court, as shown by the amended record, the following judgment was rendered:

"This cause came on to be heard on the pleadings, exhibits, and evidence adduced, and was argued by counsel. Whereupon, on consideration thereof, the court being satisfied that the relation of principal and agent existed between the complainant and the American National Bank of New Orleans; that said American National Bank was hopelessly insolvent, and that to the knowledge of the managing officers, the president, and cashier of said bank, on or before July 1, 1896; that said American National Bank was guilty of fraud in accepting the collections of the complainant, transmitted in complainant's letters of July 31 and August 1, 3, and 4, 1896; that complainant has traced the items of collections therein set forth to the hands of the defendant, the receiver, as aforesaid; that the same had come into the possession of said receiver as follows, to wit:

Items in Exhibit B, annexed to the bill of complaint, aggregating the sum of	$3,100 87
Items in Exhibit D of the bill, amounting to	462 81
Items in Exhibit F, amounting to	4,359 11
Items in Exhibit F, collected through W. L. Moody & Co., of Galveston, Tex., amounting to	326 47
	$8,249 26

—All of which came into the hands of the receiver, aggregating the sum total of $8,249.26, constituted and is a trust fund in the hand of said receiver as trustee, for the complainant; and that complainant is entitled to be paid the same, with interest, out of the funds which came into the hands of the defendant as such receiver. It is therefore ordered, adjudged, and decreed that the complainant have and recover from the defendant, F. L. Richardson, receiver of the American National Bank of New Orleans, the sum of $8,249.26, with interest at 5 per cent. per annum from the date of the filing of the bill of complaint herein, together with all costs, which is decreed to be paid within 10 days, by priority over all unsecured creditors; and that for the balance of the complainant's claim, to wit, $5,692.61, complainant be, and is hereby, recognized as a general creditor, and entitled to participate pro rata with depositors and other general creditors of said American National Bank of New Orleans in the distribution of its assets. And it is ordered, adjudged, and decreed that said defendant, receiver as aforesaid, pay to complainant such pro rata thereof as has been or may be paid to other unsecured creditors of said American National Bank.

"February 15, 1899. [Signed] Aleck Boarman, Judge."

F. N. Butler, for appellant.

E. M. Hudson, John D. Rouse, and Wm. Grant, for appellee.

Before PARDEE, McCORMICK, and SHELBY, Circuit Judges.

After stating the facts, the opinion of the court was delivered by PARDEE, Circuit Judge.

The questions presented on this appeal are identical with those presented in the case of Richardson v. Banking Co. (just decided) 94 Fed. 442.[1] On the facts as recited there is still less reason in claiming that under the contract between the parties the American

[1] 36 C. C. A. 307.

Digitized by Google

National Bank purchased the items forwarded, and that the relation of debtor and creditor ensued as soon as the items were credited on the books of the American National Bank. The correspondence between the parties was plainly and directly about collections only, and the course of business between the parties, so far as it was proved, prior to the failure of the bank, shows the full understanding of the parties that the business to be transacted was that of collection merely. All the items going to make up the sum of $8,249.26 are fully proven to have been collected subsequently to the failure of the American National Bank, and there is no dispute that the respective amounts thereof came to the hands of the receiver, and were sufficiently identified to show on what claims and for whose account they were collected. The objections as to the allowance of interest and the form of the judgment are allowed, for the reasons given in Richardson v. Banking Co., just decided. There has been much unnecessary trouble to the judges of this court, and probably to the judges in the circuit court, from the neglect of the parties to follow the usual rule in such cases, and have the accounting done contradictorily before a master.

The decree of the circuit court should be reversed, and the cause remanded, with instructions to enter a decree as follows: It is ordered, adjudged, and decreed that the complainant, the Continental National Bank of Memphis, do have and recover from the defendant, Frank L. Richardson, receiver of the American National Bank, the sum of $8,249.26, which said receiver is ordered to pay, out of the funds which have come to his hands as receiver, within 30 days from the signing of this decree, and by priority over all unsecured creditors of the American National Bank, or that he do within said delay certify the same to the comptroller of the currency, with a copy of this decree; and it is further ordered and decreed that for the balance of complainant's claim, to wit, the sum of $5,692.61, the said Continental National Bank of Memphis be, and is hereby, recognized as a general creditor, entitled to participate pro rata with the depositors and other general creditors of said American National Bank of New Orleans in the distribution of its assets; and it is ordered and decreed that the said defendant receiver pay to said Continental National Bank of Memphis, Tenn., such pro rata thereon as has been or may be paid to other unsecured creditors of said American National Bank, or do certify the same to the comptroller, to govern his action in the premises.

And it is so ordered.

(94 Fed. 457.)

CITY OF LAMPASAS v. TALCOTT.

(Circuit Court of Appeals, Fifth Circuit. May 9, 1899.)

No. 757.

MUNICIPAL CORPORATIONS—DE FACTO OFFICERS—VALIDITY OF BONDS.

The city of Lampasas was incorporated April 18, 1873, under a special charter, authorizing its mayor and and aldermen, among other things, to construct waterworks and issue bonds for public improvements. Its

Digitized by Google

organization was perfected, and continued until 1876, when its officers resigned, and administration of its affairs was abandoned. In 1883 an effort was made to form a new municipality, including within its limits the territory of the original city and a large amount of contiguous territory. Officers were elected, and the new government was organized, and continued to perform the functions of a municipal corporation until 1890, when quo warranto proceedings were instituted, and the officers removed, on the ground that the special act of 1873 was still in force, and that the resignation of its officers and its failure to continue the administration of its affairs did not amount to a dissolution of the corporation. Thereafter an election was held under the charter of 1873, and its government reorganized, and nearly all of the additional territory attempted to be included in the new city was subsequently annexed. In 1885, while the illegal organization was in force, it issued bonds for the purpose of constructing waterworks. The waterworks were constructed and accepted by the city. Upon the dissolution of this organization, the waterworks passed into the possession of one holding a claim for services as superintendent, and the city ceased to exercise control over the same, and paid to the person in possession monthly rates for the use of the water. *Held*, that the officers acting under the irregular organization were de facto officers of the city, and the bonds issued by them were valid.

In Error to the Circuit Court of the United States for the Western District of Texas.

This suit was brought to recover the sum of $2,170, with interest, alleged to be due on 62 coupons attached to bonds issued by the city of Lampasas. A jury trial was waived by the parties, and at the request of counsel for both parties the court made a finding of the facts. The court held that the plaintiff was entitled to recover on the coupons, and rendered a judgment in his favor for $2,479.86. The defendant, the city of Lampasas, sued out a writ of error. It is assigned as error that the court rendered a judgment against the city.

The following are the facts as found by the court:

(1) That the citizens of the city of Lampasas, in Lampasas county, Tex., were by special act of the legislature, approved April 18, 1873, granted a charter as a municipal corporation, under the name of the "Corporation of the City of Lampasas," with boundaries containing an area of 553 acres, covering the original town plat and a considerable area not laid out in regular blocks. In this special charter it was provided that the qualified voters should elect a mayor and board of aldermen, consisting of eight members, to hold office for the term of two years, and until their successors should be elected and qualified, and it was further provided that the mayor and five aldermen should constitute a quorum for the transaction of business. It was also provided that the first election should be held within 30 days, and one thereafter on the first Monday in January of each alternate year thereafter, by the mayor and three aldermen. The act made no provision for dissolving the corporation, and no period of time was fixed for the expiration of the charter.

(2) Under this special charter the said mayor and aldermen were granted power, by ordinance, among other things, to construct waterworks, open, grade, and keep in repair the streets, build bridges, and open sewers; to impose and collect taxes, not exceeding 1 per cent. per annum; and to issue bonds for public improvements. The mayor and aldermen were authorized to appoint a city marshal, who should also be ex officio assessor and collector of city taxes, and also to appoint a secretary and city attorney; but neither the office of treasurer nor any other officer than those named were provided for.

(3) That officers were elected, and the said municipal government was exercised by them, under the said special charter, from 1873 until 1876, when a mayor and board of aldermen were elected who favored abolishing the said municipal government, and they by formal resolution decided to resign, and did so, and abandoned their said offices, and thereafter no steps were taken,

Digitized by Google

or action of any kind had, under this special charter, until March, 1890, after the decision of the supreme court of Texas in the case of Largen v. State, reported in 76 Tex. 323, 13 S. W. 161, hereinafter more fully referred to.

(4) That the said city of Lampasas was in 1873, and has since continued to be, the county seat of Lampasas county, and had a population in 1876 of about 800. That until the year 1882 the said town was without railroad facilities, when, upon advent of a railroad, it began to grow rapidly, and by April, 1883, had a population of about 4,500 people, with street railroad and other improvements. About 1884 the population began to decline, and continued to decline until about 1890.

(5) That at all times the business part of the town has been chiefly confined to the court-house square and streets leading out from it, and has been within the bounds of the said special charter; but during and since 1882 business houses were built near the railroad depot, outside of said bounds, and outside of the present limits, but inside of the boundaries of 1883, and business has been since transacted therein.

(6) That after the advent of the railroad numerous additions were laid out to the town, and residences built thereon by persons doing business in the town, and it continued to grow in population, until it reached about 5,000 in 1884 and 1885, when the decline in population began.

(7) That in February, 1883, a petition was presented to the county judge of said Lampasas county, by more than 50 qualified voters living in and around the limits of said town, asking that an election be ordered to determine whether the persons living within the limits in said petition set out should incorporate as a city of more than 1,000 inhabitants, under the provisions of the general laws of Texas, as contained in title 17 of the Revised Statutes. Upon this petition the said county judge made his order, and an election was held, resulting in a majority vote in favor of said corporation,—some of those voting living inside, and some outside, of the limits prescribed by said charter; and upon return thereof the said county judge, by proper order, declared the said city duly incorporated, with the limits in said petition set out, and which contained an area of 1,495 acres, embracing practically all of the lands included within the said special charter, and extending nearly one-half mile west, north, and east thereof, to include the railroad depot.

(8) That, in pursuance to this incorporation, a municipal government was organized, with all the officers prescribed in the general charter contained in said title 17 (some of the aldermen and other officers residing outside of the limits prescribed by said special act), and exercised all the powers and functions of a city of over 1,000 inhabitants, organized under the general laws of the state of Texas, levying and collecting taxes, and prescribing and enforcing police regulations, without any one contesting or disputing the validity of its lawful rights to act as such, until November 4, 1889, when, upon the relation of a citizen and taxpayer, the district attorney, himself also a resident taxpayer, filed an information in the nature of quo warranto against T. J. Largen, who was mayor, and all other persons assuming to act as city officers under this incorporation by vote of the people, alleging that the said incorporation by vote of the people in 1883 was invalid, because of the fact that the said special charter granted in 1873 had never been repealed, and that the action of the officers in resigning in 1876 was without effect, and praying that the said Largen and his associates be ousted from office, and the said incorporation of 1883 be declared invalid.

(9) That said suit was instituted by the said district attorney, without any direction by the attorney general or other executive officer of the state, and without making any of the creditors of said incorporation parties, and upon trial resulted in a judgment ousting the said Largen and associates from office, which judgment, on appeal, was affirmed by the supreme court of Texas on the 31st day of January, 1890, and its opinion may be found in 76 Tex. 323, 3 S. W. 161.

(10) That after the decision of the supreme court affirming said judgment of ouster, the said Largen and associates ceased to act, and upon an order for the election of mayor and aldermen under the special charter of 1873, made by the county judge of Lampasas county, an election was held by persons living within the limits of said charter on the 18th day of March, 1890, and

Digitized by Google

the persons elected as mayor and aldermen met and organized March 19, 1890, and on March 22, 1890, by unanimous vote of the city council it was resolved to accept the provisions of "title 17 of the Revised Statutes of the state of Texas in lieu of the charter granted by the legislature," and a copy of this resolution was duly certified and recorded as required by law, and said city at once assumed to act under the general charter provided in said title 17, and is now acting thereunder.

(11) That on December 26, 1890, by vote of a majority of the resident citizens of the added territory hereinafter mentioned, there was added to the limits of the city, as set out in the special charter of 1873, all of the land west of the same which was included within the limits of 1883, and one tier of blocks additional, since which time the said city government has assumed jurisdiction over said added territory, but has not assumed any jurisdiction over that part lying north and east of said original limits, and which was included within the limits of 1883.

(12) The area of the territory added in December, 1890, was 428 acres, which embraced the greater part of the residence property of the city outside of its original charter limits of 1873.

(13) That the said territory lying north and east of said original limits, and which was within the limits of the charter of 1883, as adopted by the vote of the people, has situated thereon 77 residence houses, occupied by persons 90 per cent. of whom follow some kind of business within the town, as defined by charter limits of 1873. The following map, introduced in evidence, shows the boundaries prescribed by the act of 1873, the boundaries defined in the order of the county judge in 1883, the boundaries of the territory added in December, 1890, the territory subdivided into lots, blocks, etc.:

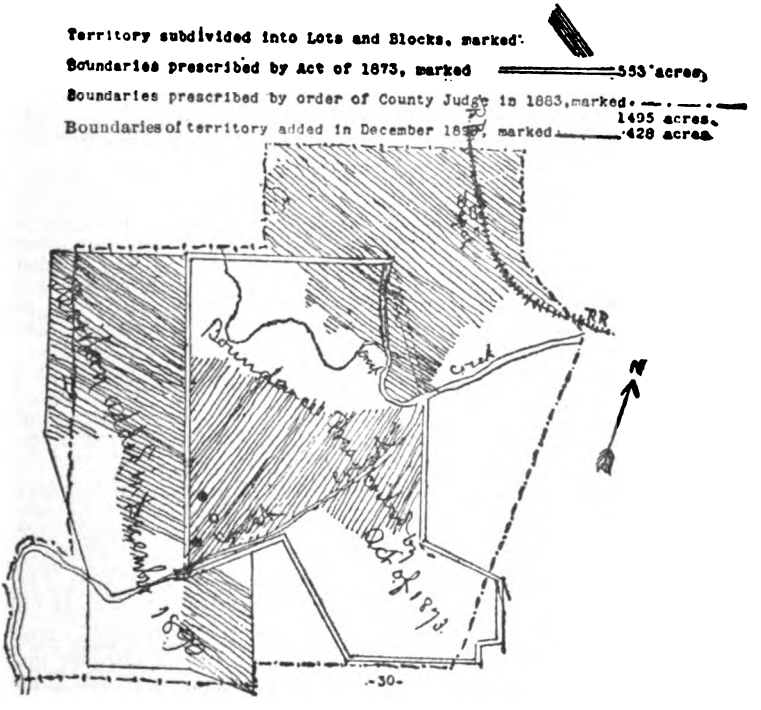

Digitized by Google

(14) It was proven that all the books and papers of the city government of the city of Lampasas under the charter of 1873 and 1883 were lost, and could not be found, except the assessment rolls for the year 1889, from which it appears that the assessed value of all lands within the city limits of 1889 was $664,429, and that the personal property was about $400,000, and that the said assessment was divided as follows as to the lands, no division being shown as to personal property, viz.: Within old limits of 1873, $452,444.00; within the part added in December, 1890, $157,915; within the parts north and east, $68,970.

(15) The witness who made the foregoing examination states that the said rolls show the names of 438 voters, divided as follows, viz.: Residing within old limits of 1873 were 175; residing on part added in December, 1890, 167; residing on parts north and east, 96.

(16) From the facts recited in the last two findings, the court finds that the city of Lampasas as now organized, and as it has existed since 1890, embraces about 90 per cent. in value of all real property situated within the city as organized under the charter adopted by vote of the people, and situated therein when the city government under Largen was dissolved, 66 per cent. being in original limits, 24 per cent. in territory added in 1890, and 10 per cent. in territory now excluded, and that of the number of resident voters therein at the time about 22 per cent. are shown to have resided outside the present limits, and of these 90 per cent. are shown to have followed some line of business in said original charter limits of 1873, which is shown to contain all the business part of the city except that near the depot; and from these facts the court finds that the present charter limits embrace substantially all of the persons and property embraced within the limits of the said city of Lampasas as it existed under the charter adopted in 1883 by vote of the people, and recognized and acted upon by them as a valid city government from the time of its adoption until the quo warranto proceedings against Largen and associate officers in 1889, during which time the officers assuming to act as officers under said general charter were elected in good faith by all persons residing within the said limits of the charter of 1883, and as such officers in good faith discharged the duties of their respective offices, without dispute by any person residing within the restricted limits of the charter of 1873, or by persons living outside of the same.

(17) The court further finds that in January, 1885, the city council of said city of Lampasas, elected under the provisions of the general charter contained in title 17 aforesaid, and assuming to act thereunder, and not under the provisions of the charter of 1873, in good faith, and in response to a general demand of the business men of the city for fire protection, and to furnish water to the city, then having a population of about 4,500, determined to build a system of waterworks for the city, and to pay for the same with the proceeds of sale of bonds of the city, and to this end, after full and open discussion, did pass ordinances to the following effect, viz.:

"Ordinance No. 59 [Printed on Back of Bond].

"An ordinance to be entitled 'An ordinance to provide for the issuance of waterworks bonds of the city of Lampasas and to provide for the payment of the interest and sinking fund of said bonds.'

"Section 1. Be it ordained by the city council of the city of Lampasas, that the mayor of said city be, and he is hereby, authorized and required to have engraved or printed coupon bonds of the city of Lampasas, with semi-annual interest coupons attached, falling due on the first days of January and July of each and every year from and after their date at the rate of 7 per cent. per annum interest; said bonds to be styled 'Lampasas City Waterworks Bonds.'

"Sec. 2. Said bonds shall be drawn to mature at fifty years from date of issuance, with the option reserved to the city council to redeem and retire ten thousand dollars of the principal of said bonds at the end of ten years from the date of the issuance of said bonds, and to redeem and retire five thousand dollars of the principal of said bonds at the end of each period of five years from and after said ten years from date of issuance.

Digitized by Google

"Sec. 3. Said bonds shall be issued to the amount of forty thousand dollars ($40,000), or so much thereof as may be necessary, shall be dated at the time of issuance, and shall bear interest from said date of issuance.

"Sec. 4. Said bonds shall, at the time of their issuance, be dated and signed by the mayor, countersigned by the city secretary, and registered by the city treasurer.

"Sec. 5. The city secretary and city treasurer shall each keep a record of the number, date of issuance, and amount of said bonds, and the number, amount, and date of maturity of the coupons thereto attached, and shall indorse the countersigning and registration thereof on each of said bonds.

"Sec. 6. Said bonds shall be issued in sums of one thousand dollars each, payable to bearer, and the principal and interest thereon shall be payable at S. M. Swenson & Sons' Bank, New York City, or at the office of the city treasurer in Lampasas, the interest being payable semiannually on the coupons attached.

"Sec. 7. For the purpose of providing for the payment of the interest on said bonds, and to provide a sinking fund for the redemption of the same, a special ad valorem tax of twenty-five cents on every one hundred dollars' worth of property is hereby levied and ordered to be assessed and collected for the year 1885, and for each and every year thereafter until said bonds, principal and interest, are paid, on all property subject to taxation within the city of Lampasas, and rendered to and assessed by the city assessor and collector: provided, however, that the city council shall, from time to time, make a proportionate reduction in the amount or rate of the tax hereby levied whenever the whole amount of said tax shall not be necessary to meet the interest and sinking fund on the bonds of this issue then outstanding.

"Sec. 8. To provide funds for the payment of said interest and sinking fund, there is hereby appropriated out of the revenues of the city, arising from the net earnings of the waterworks, a sufficient sum annually, beginning with the year 1885, to make up the deficiency (if any there be) of said interest and sinking fund after the collection of the special tax herein provided for, and the sums arising from the net earnings of the waterworks shall not be drawn upon or disbursed for any other purpose until said interest and sinking fund is fully provided for in each year, and the city treasurer shall keep a separate account of all moneys derived from said tax and net earnings of waterworks, to be known and designated on his books and reports as the 'Waterworks Fund.'

"Sec. 9. At the end of ten years from the date of issuance of said bonds, or as soon thereafter as practicable, the city council may designate by an order entered of record on the minutes the numbers and amount of the principal (not exceeding $10,000.00) and date of payment of such bonds of this issue as the city desires to redeem, said numbers being designated by lot or otherwise, as the council may then determine, provided the numbers designated are consecutive, and a copy of such order shall be published in some newspaper in the city of Lampasas, and such other notice, personally or otherwise, may be given to the holder of such designated bonds, their agents or representatives, as the council may determine at the time of such designation, and such designated bonds shall be paid upon presentation, and shall cease to bear interest from and after the date of payment fixed by said order; and at the end of each period of five years thereafter five thousand dollars ($5,000.00) of the principal of said bonds may be redeemed in like manner.

"Sec. 10. The bonds herein provided for shall be sold at not less than par, and in such manner as is or may be hereafter provided by ordinance, resolution, or otherwise, and the proceeds of said bonds shall be devoted exclusively to the construction of a suitable system of waterworks for fire protection, family supply, and other public and private purposes, and for the purpose of such fire department supplies as may be deemed necessary by the council; said system of waterworks to be operated in such manner as may be hereafter provided by ordinance, resolution, or otherwise.

"Filed January 6th, 1885. S. S. Potts, Secretary.

"Passed January 6th, 1885. S. S. Potts, Secretary.

"I approve the above ordinance, January 6th, 1885.

"W. J. Standefer, Mayor of City of Lampasas.

"Attest: S. S. Potts, Secretary."

Digitized by Google

"Ordinance No. 60 [Printed on Back of Bond].

"An ordinance entitled 'An ordinance to provide for the collection of a special tax for the payment of interest and to provide a sinking fund for the redemption of waterworks bonds of the city of Lampasas.'

"Section 1. Be it ordained by the city council of the city of Lampasas, that the city assessor and collector be, and he is hereby, required to assess and collect a special tax of twenty-five cents on the one hundred dollars' worth of all property, subject to taxation within the city of Lampasas, rendered to and assessed by him for the year 1885, and for each and every year thereafter, for the payment of the semiannual interest, and to provide a sinking fund for the redemption of the waterworks bonds of the city of Lampasas, until said bonds, principal and interest, are paid: provided, however, that the city council shall from time to time make a proportionate reduction in the amount of the tax hereby levied whenever the whole amount of tax shall not be necessary to meet the interest and sinking fund on the bonds then outstanding.

"Filed January 6th, 1885. S. S. Potts, Secretary.

"Passed January 6th, 1885. S. S. Potts, Secretary.

"I approve the above ordinance, January 6th, 1885.

"W. J. Standefer, Mayor of City of Lampasas.

"Attest: S. S. Potts, Secretary."

"Ordinance No. 65 [Printed on Back of Bond].

"An ordinance to be entitled 'An ordinance to amend section 9 of Ordinance No. 59, passed and approved January 6th, 1885.'

"Section 1. Be it ordained by the city council of the city of Lampasas that section 9 of Ordinance No. 59, passed and approved January 6th, 1885, be so amended so as to read hereafter as follows:

" 'Sec. 9. At the end of ten years from the date of issuance of said bonds, or as soon thereafter as practicable, the city council may designate, by an order entered of record of the minutes, the numbers and amount of the principal, not exceeding $10,000.00, and date of payment of such bonds of this issue as the city desires to redeem; said numbers so designated shall be consecutive, beginning at No. 1, and a copy of such order shall be published in some newspaper in the city of Lampasas, and such other notice, personally or otherwise, may be given to the holder of such designated bonds, their agents or representatives, as the council may determine at the time of such designation, and such designated bonds shall be paid upon presentation and shall cease to bear interest from and after date of payment fixed by said order; and at the end of each period of five years thereafter five thousand ($5,000.00) of the principal of said bonds may be redeemed in like manner.'

"Sec. 2. That this ordinance take effect and be in force from and after its passage.

"Passed March 21st, 1885. Approved March 21st, 1885.

"W. J. Standefer, Mayor.

"Attest: S. S. Potts, Secretary."

(18) As bearing on the question of the validity of said ordinances as the act of de facto officers under the charter of 1873, it is here stated that under said charter of 1873 it is provided:

"Sec. 12. All ordinances and resolutions enacted by said corporation shall be published by posting notice at three public places in the limits of the corporation or by publication for at least three successive weeks in a newspaper published within the limits of said city."

And it was further shown that the city council that passed said ordinances was composed of the mayor and five aldermen, all of whom were elected by general vote of the entire corporation within the limits of the charter under the incorporation of 1883, and that two of the said aldermen and the city secretary resided in the territory outside of the charter limits of 1873, and one of said two aldermen resided in territory northeast of said limits and outside of the present city limits.

(19) After the adoption of the ordinances aforesaid, the said city council advertised for bids for the construction of a system of waterworks, and personally inspected similar works in neighboring towns, and also tried to negotiate

Digitized by Google

a sale of bonds for cash. Failing to effect a sale of the bonds by the time set for receiving the bids, the letting of the contract was postponed. At this time several bidders were ready to submit plans and bids, but, as all contemplated being paid in cash, no bids were made or received. It is shown that there were present at this time, prepared to submit a bid, a responsible party willing to build a system of waterworks for $25,000 in cash; but it was not shown what kind of a system this party intended building, as to the size of mains, pumps, standpipe, or other details, to enable the court to draw any comparison as to whether this bidder proposed to build as good a system as was subsequently built, or not,—the fact being that this bidder demanded cash payment, and was unwilling to take bonds in payment.

(20) At a later date the said city council awarded the contract to a bidder who was willing to build a system according to his plans at the price of $40,000, to be paid in bonds of the said city, and this contractor proceeded to build the said system, and the same was fully tested by the city council before acceptance, and upon such test and approval the said works were accepted and paid for by the delivery by the city council of the bonds as called for in the contract. The city officers paid for the waterworks in bonds, because they had been unable to sell the bonds for money. The bonds were not considered good for their face value. If they had been so considered, the waterworks could have been constructed for less.

(21) It was shown, over the objection of plaintiff as to the competency of the witnesses, by two persons who became familiar with the nature and extent of the said system as built, one about one year and the other about two years after it was constructed, that in their judgment the said system was worth, at cash values, based upon cost of construction, according to the estimate of one, the sum of $25,000, and of the other $26,279; neither witness allowing anything by way of profits to the contractor. This was all the testimony on this point. Neither of these witnesses were shown to have been familiar with the price of material and labor in 1885, nor to have had any knowledge of building waterworks at that time; but one of them operated the works from 1885 to 1891, and the other had been engaged since 1887 in putting in waterworks under contract in various cities in Texas.

(22) The plaintiff introduced and read in evidence, for the purpose of identification, and to prove the ordinances indorsed thereon and hereinbefore set out, one of the bonds alleged to have been issued by defendant in payment for the said system of waterworks, which bond is in words and figures as follows:

"State of Texas.

"Lampasas City Waterworks Bond.

"The City of Lampasas

"Will pay one thousand dollars to bearer, fifty years after date hereof, with interest from date at the rate of seven per cent. per annum, payable semi-annually, on the first days of January and July, in each year, payable at the office of S. M. Swenson & Son in the city of New York, or at the treasurer's office in the city of Lampasas, on presentation of the proper coupon hereto attached. Issued under authority of an ordinance entitled 'An ordinance to provide for the issuance of waterworks bonds of the city of Lampasas, and to provide for the payment of the interest and sinking fund of said bonds,' passed January 6th, 1885, a copy of which ordinance is printed on the reverse side hereof, to which reference is made.

"Witness the hand of the mayor of the city of Lampasas, attested by the city secretary, with the corporate seal affixed, in the city of Lampasas, state of Texas, this twenty-seventh day of March, A. D. 1885.

"W. J. Standefer, Mayor.

"Attest: [Seal.] S. S. Potts, Secretary."

Attached to the said bond were coupons Nos. 24 to 100, inclusive. In the upper left-hand corner, in transverse form, and separated from the body of the bond by vignette line, was the following:

"————, Comptroller State of Texas.

"S. S. Potts, Secretary City of Lampasas.

"W. S. Morris, Treasurer City of Lampasas."

Digitized by Google

On the back of said bond was the following indorsement: "Registered March 28, 1885. Wm. J. Swain, Comptroller." But no seal was affixed to such signature or indorsement. On the back of this bond was printed copies of the ordinances under which it was issued, as hereinbefore set out.

(23) The plaintiff introduced in evidence a certificate from the comptroller of public accounts of the state of Texas, made after the institution of this suit, certifying that the records of his office showed that on March 28, 1885, there were duly registered 40 bonds of the city of Lampasas, of the denomination of $1,000 each, known as "Waterworks Bonds." And the plaintiff further introduced in evidence a certified copy of a statement submitted by W. J. Standefer, mayor, and S. S. Potts, secretary, of the city of Lampasas, to the comptroller, when said bonds were tendered for registration, certifying that the assessed value of all property situated within the limits of said city of Lampasas, as shown by the tax rolls for the year 1884, was $1,447,200.

(24) The plaintiff read in evidence 62 coupons, described in his petition, each of the sum of $35, and maturing at the different dates set out in his petition, which said coupons, except as to due date and number of bond, were of the following form:

"$35. The City of Lampasas $35.

"Will pay the bearer thirty-five dollars at the office of S. M. Swenson & Son in the city of New York, or at the treasurer's office in the city of Lampasas, on the 1st day of ——, 189–, being six months' interest on bond No. —.

"S. S. Potts, Secretary."

Upon which coupon the court finds that there is due the plaintiff on this day the sum of $2,170 principal and $309.86 interest.

(25) At the time of the affirmance of the judgment in Largen v. State, 76 Tex. 323, 13 S. W. 161, one H. E. Hedeman was in charge of the waterworks so acquired for said bonds, he having taken charge of said waterworks as superintendent before the dissolution of said organization of 1883. He held possession of said waterworks under a claim for $150, back salary due him from the dissolved organization, and for some other moneys due him for a house placed on the waterworks grounds. Asserting such claim, he remained in charge of such waterworks for over one year from the dissolution of said corporation of 1883. He delivered possession of said waterworks to Coler & Bro., bankers and brokers of New York City, through their agent, W. L. Vining, for the reason that Coler & Bro. paid him the debt due him and for his interest in said house,—said Vining at the time exhibiting to him one of said bonds of said series, and stating that said Coler & Bro. owned it and all other bonds of said series; and said Coler & Bro. and their assigns have from that time controlled and claimed to own said waterworks, and still control and claim to own said system of waterworks. It was not shown that the bond exhibited to said Hedeman by Vining was one of the number from which any of the coupons in suit was taken, nor was any further proof made that Coler & Bro. owned any of said bonds, or represented any of the owners thereof. It was shown that the said Hedeman did not pretend to act for the city of Lampasas in making a settlement of said bond, and only assumed to act in the protection of his own individual claim.

(26) The court further finds that, since the reorganization of the city government in 1890, under the special charter of 1873 and the general charter adopted immediately thereafter, the city of Lampasas has exercised no control over said waterworks, but has paid, monthly, first to said Hedeman and then to Coler & Bro., for the use of water supplied by said waterworks system, and that since said reorganization in 1890 said city of Lampasas has not taken possession of any other property within its limits that was acquired or constructed between 1883 and 1890, except one bridge, built prior to 1890, which was not paid for, but which, on account of such nonpayment, was taken possession of by the builders, and sold by them to the county of Lampasas and the city as organized in 1890.

(27) It was shown that the pumping station of the waterworks as originally constructed was situated within the corporate limits as defined in the charter of 1883, but was removed by the city in 1887 to a point without the corporate limits of 1883, and has remained at said place ever since. It was further shown that

Digitized by Google

the standpipe was located at a point near the west line of the charter limits of 1883, but within such limits, and that the distributing water mains leading from said standpipe were distributed through the part of the city west of the original charter limits of 1873, thence through the business part of the city within said original limits, and extending eastward and northward to the railroad depot, and that said standpipe and all of said distributing mains and fire hydrants are within the limits of the city as now existing (composed of the original charter limits and the territory added in 1890), except that for a distance of about 900 yards one of said mains extends northward to said depot, with one fire hydrant thereon.

(28) It was shown, and the court so finds, that there has at all times been a well-defined business center in the city of Lampasas, which is within the limits of the charter of 1873; and the court also finds that between 1883 and 1890 a number of business houses and residences were established in the neighborhood of the railroad depot, all of which were within the limits of the charter of 1883, but are not within the limits over which the present city government assumes jurisdiction. Within this territory it was shown that there are 77 inhabited dwellings and 2 vacant dwellings. It was shown that of the persons occupying these dwelling houses 90 per cent. did business within the present limits of the city.

Franz Fiset, C. H. Miller, and J. C. Matthews, for plaintiff in error.

T. B. Cochran and R. G. West, for defendant in error.

Before PARDEE, McCORMICK, and SHELBY, Circuit Judges.

SHELBY, Circuit Judge (after stating the facts as above). The city of Lampasas was made a municipal corporation by special act of the legislature on April 18, 1873. Until 1876 the corporation remained organized under this special act. The city officers then resigned, and the administration of the town's affairs by officers was abandoned. In February, 1883, the population of the town having increased, an effort was made to form a new municipal corporation. The procedure was under statutes intended to apply to towns that had never been incorporated. The citizens of Lampasas were acting on the mistaken presumption that they had effectually abandoned and annulled the incorporation of the town under the special act. The town, as last organized, embraced substantially all of the territory covered by the special act, and also other lands so as to include a railroad depot. Each organization provided for the government of the town by a city council, and the usual officers were provided by each. The office of treasurer was not provided for by the special act. The last organization continued in practical force from February, 1883, to January 31, 1890, when the supreme court of Texas sustained quo warranto proceedings, and removed the city officers holding under an election had under the organization of 1883. The supreme court held that the effort to incorporate the town under the general laws was ineffectual, and that the mode adopted was only applicable to unincorporated towns. The effect of the court's opinion was to show that the special act of 1873 continued in force. Largen v. State, 76 Tex. 323, 13 S. W. 161. After the opinion of the supreme court was rendered, an election was held under the special charter of 1873, and soon thereafter the city regularly accepted the provisions of the general laws of the state relative to municipal corporations,

Digitized by Google

as stated in the findings of the circuit court. By the charter of 1873 the mayor and aldermen were granted power to "construct waterworks" and to "issue bonds for public improvements." The bonds were issued, and used to secure the erection of the water works. The works are shown to be worth not less than from $25,000 to $26,000, without estimating profits made by the contractor. The bonds were used to pay for the waterworks. In the absence of proof to the contrary, they are presumed to have passed into the possession of the plaintiff before maturity, for a valuable consideration, and without notice of any objection to which they were liable. City of San Antonio v. Mehaffy, 96 U. S. 314. If it be true that the corporation had authority under any circumstances to issue the securities, the bona fide holder has a right to presume they were legally issued. Id.

The dominant question in this case is, had the corporation, at the date of these bonds, the right to issue them? In one aspect a municipal corporation is an agency of the state government to perform certain functions. It is brought into existence by the state, and can only be annulled by the creative power, or pursuant to laws regularly made. Its existence cannot be collaterally attacked. As a party to a contract, it must be looked on as an individual, or as a private corporation, for its contracts are equally under the protection of law. The prohibition against their impairment is as effective as in the case of the contracts of individuals. It is protected, even against execution, in the ownership of property necessary to the exercise of its public functions. It holds for taxation the real estate within its limits and the personal property of its residents. These are its resources for discharging its debts. The people living in it are the units of which the corporation is composed. The people and the property are the whole debt-paying elements of a municipal corporation. The organization is the mere shell that holds it in shape. The kernel is composed of the people and the property. Looking practically at the substance, rather than at the form, the courts have uniformly held that no change of name or of organization will enable a municipal corporation to avoid the payment of its debts. Whatever the name may be, whatever the officers may be called, the new organization would be the successor of the old, would be composed of the same, or nearly the same, units, would embrace the same territory, holding the same, or nearly the same, subjects of taxation, and would in fact be the successor of the first organization. As the second government succeeds to the rights of the first, it is also subject to its liabilities. Shapleigh v. City of San Angelo, 167 U. S. 646, 17 Sup. Ct. 957; Laird v. City of De Soto, 22 Fed. 422. In the case at bar the legal charter under the special act was laid aside. One illegal, but having all the appearances of legality, was formed. It named the necessary officers, elected them, and performed all the functions of a municipal corporation for a period of nearly seven years. The state, during this period, did not challenge its exercise of power. It issues $40,000 of bonds, and obtains the benefit of their sale. Then, by judgment of the court, the officers are re-

Digitized by Google

moved as officers of the new organization, and others elected under the first charter. Can it be held that the city, composed of the same people, including the same resources for revenue, is now absolved of all liability upon the bonds? Can a city, under an illegal and irregular change of limits, preserving the same name, obtain credit for public improvements, and, when the irregular charter is vacated, return to the use of the first, which has all along been in force, and then stand freed of the debt? The people and property now sought to be charged were all, or nearly all, included and represented in the irregular corporation which issued the bonds. They get the benefit of the bonds. The facts show that the city and citizens were acting in good faith. The bonds were issued with public approval, and without objection. The improvements were accepted, and it was intended that the bonds should be paid. If it had been otherwise, if the irregular organization had been assumed in order to obtain credit, and abandoned to avoid payment, could such a scheme receive judicial sanction? This would not be permitted. It would open wide an avenue for fraud and imposition. If it is plain that such a plan, no matter how ingeniously executed, would not be permitted to succeed, it must be equally clear that, when the citizens and acting officers of the irregular corporation acted in good faith, and believed their action to be regular and valid, such irregularity will not be permitted to work injustice. The officers representing the city in the issuance of the bonds believed that they were clothed with authority by the procedure of 1883. In this they were mistaken. The charter of 1873 was still in existence. It authorized the election of officers of the city. These officers had been elected. Although they believed that they held office under the new organization, they were officers de facto of the city, actually filling places created by the special act of 1873. The special act of incorporation authorized the issuance of the bonds for public improvement. An ordinance was passed to issue them. The bonds, we hold, were not made invalid by reason of the illegal effort at incorporation made in 1883.

There are other defenses suggested in argument, but it would serve no useful purpose to extend this opinion. The whole of the findings of fact by the circuit court will appear in the statement of the case, and it is sufficient to say that we concur in the conclusion of the learned judge presiding in the circuit court that the plaintiff was entitled to judgment. The judgment of the circuit court is affirmed.

Digitized by Google

(94 Fed. 468.)

UNDERWOOD v. PATRICK.

(Circuit Court of Appeals, Eighth Circuit. April 24, 1899.)

No. 1,146.

1. VENDOR AND PURCHASER — SALE OF LAND TO SYNDICATE — ACCEPTANCE OF NOTES OF ONE MEMBER FOR PURCHASE MONEY.

   A vendor who sold land to a syndicate, conveying to one member and accepting his individual notes, secured by mortgage on the property for the unpaid purchase money, with knowledge that such arrangement was made for the express purpose of relieving another of the purchasers from personal liability for such unpaid purchase money, is estopped to claim such liability, and has no right of action against him on the notes, or otherwise, to recover a deficiency remaining due after foreclosure of the mortgage; nor was such right given by a declaration of trust executed by the grantee, declaring the interest of each member of the syndicate in the property and their several liabilities as between themselves.

2. LIMITATION OF ACTIONS—WHAT LAW GOVERNS.

   A plea of the statute of limitations relates to the remedy, and is governed by the law of the forum.

3. SAME—ACCRUAL OF CAUSE OF ACTION.

   Where a vendor sold land to a syndicate, taking notes of one member for deferred payments of purchase money, a right of action by the vendor against another member of the syndicate for the recovery of such purchase money, if any existed, accrued on the maturity of the notes.

4. SAME—EFFECT OF PAYMENTS.

   As an action against another of the purchasers, who did not sign the notes, would not be based thereon, but on a collateral promise, a payment on the notes after their maturity by the maker or a subsequent grantee would not extend the time within which such action could be brought.

In Error to the Circuit Court of the United States for the District of Colorado.

Eliza W. Patrick, the defendant in error, brought this action against Frank L. Underwood, the plaintiff in error, to recover certain sums of money claimed to be due her on notes executed by one Nathan D. Allen. The substance of the facts set out in the complaint are: That Mrs. Patrick was the owner of a tract of 615 acres of land adjoining the city of Omaha, Neb., which Underwood, Craig, and Allen wanted to purchase from her. That they represented to her that they wanted to form a syndicate consisting of themselves and other parties. That on the 12th of May, 1887, the sale was completed for the sum of $510,000. That the deed for the property was executed and delivered by Mrs. Patrick to Allen, who paid her $110,000 of the purchase money, and for the other $400,000 executed to her his four notes for $100,000 each, due, respectively, on the 1st days of January, 1888, 1889, 1890, and 1891. That, to secure their payment, Allen executed to her a mortgage on the real estate conveyed by her to him. That at the time the transaction took place she knew these parties (Underwood and Craig) were to be interested in the purchase of the property, but that the title should be taken in the name of Allen, the others to have an interest in proportion to the amounts to be paid by them respectively of the purchase money. That Underwood was the organizer and promoter of the syndicate, and the title of the property was taken in the name of Allen for the purpose of avoiding any personal liability on his part on the notes to be given on the deferred payments. That, after the conveyance had been made by her to Allen, he executed "for the benefit of the said persons composing said syndicate" a declaration of trust, of which the following is a copy:

"Know all men by these presents, that I, Nathan D. Allen, of Kansas City, of the state of Missouri, do make the following declaration of trust: That whereas, I have this day bought from Eliza W. Patrick, and she has conveyed

Digitized by Google

to me by warranty deed, dated on the 12th day of May, and recorded in the records of Douglas county, Nebraska, certain lands in said county, in said deed more particularly described: Now, therefore, I do declare that the said land was bought by me for the following named persons: Frank L. Underwood, trustee; William B. Clark; William A. Clark, trustee; Theodocia I. Underwood; William H. Craig; and Nathan D. Allen,—and that the said F. L. Underwood, trustee, is entitled to two-elevenths ($^2/_{11}$) of the said property. That the said William B. Clark is entitled to one and one-half eleventh (1½-11) of the said property. That the said W. A. Clark, trustee, is entitled to one-eleventh ($^1/_{11}$). That the said Theodocia I. Underwood is entitled to four and one-quarter elevenths (4¼-11) of the said property. That the said W. H. Craig is entitled to one-eleventh ($^1/_{11}$) of the said property. And that the said Nathan D. Allen is entitled to one and one-quarter elevenths (1¼-11) of the said property, and that the same are liable in the same proportions upon the mortgage given to secure the deferred payments upon the said property. Dated this 12th day of May, 1887. Nathan D. Allen."

—That the plaintiff in error was the owner of two-elevenths of the property. That the object of the parties in purchasing this tract of land was to lay it off in lots and sites, and then dispose of it. That in pursuance of this agreement they did form a corporation under the laws of the state of Nebraska, named the Patrick Land Company, and the shares of stock in the corporation were issued and delivered to the parties in proportion to their respective interests in the property. That some of the property was sold and certain payments made to the plaintiff, but leaving the sum of $285,277.31 due on the 11th of October, 1891. That foreclosure proceedings were instituted by her and the land sold, leaving a deficiency of $101,278.76 still due her, for which deficiency a judgment was rendered against Allen but never collected, Allen being wholly insolvent. That the proportion of said deficiency for which defendant is liable by reason of his interest in the land amounts to $32,225.06, together with interest from May 7, 1894, for which sum judgment was asked.

The suit was commenced more than six years after all of the purchase-money notes had become due. There was a demurrer to the complaint, assigning for grounds of demurrer that the complaint did not state facts sufficient to constitute a cause of action, and pleading the three and six years statute of limitations of Colorado. The demurrer was overruled, and the defendant filed an answer pleading the statute of limitations, and denying most of the material allegations in the complaint. The cause was tried before a jury, and the court directed a verdict for the plaintiff, and the cause has been removed to this court by writ of error.

Charles H. Toll and D. V. Burns, for plaintiff in error.

Robert W. Patrick, Charles J. Greene, and Ralph W. Breckenridge, for defendant in error.

Before CALDWELL, SANBORN, and THAYER, Circuit Judges.

CALDWELL, Circuit Judge (after stating the facts as above). From the view which we take of this case, it is unnecessary to consider more than two questions: (1) Do the facts show that Mrs. Patrick ever had a cause of action against the defendant? (2) If she ever had a cause of action, is it barred by the statute of limitations?

It is specifically alleged in the complaint that Mrs. Patrick, at the time the transaction took place, knew that Underwood had an interest in the purchase, "but, for the purpose of avoiding any immediate personal liability and obligation upon the notes to be given for the deferred payments, he, the said Frank L. Underwood, had the titles to said lands taken in the name of said Allen." The undisputed evidence shows the same facts, and also that, to relieve himself of

Digitized by Google

any personal liability in case the venture proved unprofitable, Underwood refused to join in the execution of the notes given for the unpaid purchase money by Allen, and that these facts were known to the plaintiff. With knowledge of these facts, she executed the conveyance to Allen, and accepted his individual notes for the unpaid purchase money secured by mortgage on the lands conveyed, and afterwards, in pursuance of the understanding of which Mrs. Patrick had knowledge, and to which she consented, the lands were conveyed by Allen to the corporation created for that purpose, and she received from that corporation large sums of money realized by it from the sale of lots, which sums paid the interest on the notes, and reduced the principal from $400,000 to $285,277.31. These facts clearly estop her from setting up a claim of personal liability on the part of Underwood to her. Had Allen acted as agent for Underwood and this agency not been disclosed to Mrs. Patrick, or had he been a dormant partner, she might have had a good cause of action against him, although we do not so hold, as the question is not before us; but when she consented to accept Allen's notes, with full knowledge of all the facts, she, in effect, agreed that in the case of a deficiency she would not look to him for payment of any part of the deficiency. To hold otherwise would be to defeat the very object of Underwood which he had made known to Mrs. Patrick, and to which she must be held to have assented. There is no allegation in the complaint and no proof that there was any promise or contract by Underwood with her to pay any part of the notes, but, on the contrary, the transaction itself, as well as the allegation in the complaint, shows conclusively that she looked to Allen alone and the mortgage executed by him for the payment of the balance of the purchase money due her, and upon such a state of facts Underwood is clearly not liable to her on the notes, or otherwise. Cragin v. Lovell, 109 U. S. 194, 3 Sup. Ct. 132; Tuthill v. Wilson, 90 N. Y. 423; Stackpole v. Arnold, 11 Mass. 27; Williams v. Robbins, 16 Gray, 77; Williams v. Gillies, 75 N. Y. 197.

Williams v. Gillies, supra, is a case on all fours with the case at bar. In that case the finding of facts was that the maker of the note executed it with the consent and knowledge of the defendants; that the defendants were really the partners of the maker of the note in the purchase for speculative purposes of the real estate for which it was given, but that the transaction was made in the name of Dobbs, to whom the land was conveyed, and whose notes secured by mortgage were executed for the deferred payments of the purchase money. It was claimed that this made the defendants liable as partners of Dobbs, but the court said:

> "The substance of the transaction was that Dobbs was to take title and give his bond and mortgage in his own name and representing himself and no one else, and this is not inconsistent with the agreement that Raynor and Gillies [the defendants] were to have an interest in the speculation."

And the court held that they were not liable for the Dobbs debt, or any part thereof. But it is earnestly urged that when Underwood accepted Allen's declaration of trust which contained the provision, "and that the same [the persons interested with Allen in the pur-

Digitized by Google

chase] are liable in the same proportions upon the mortgage given to secure the deferred payments upon said purchase," Underwood thereby became liable to Mrs. Patrick for the proportion of his interest under that declaration of trust executed by Allen. The plaintiff was not a cestui que trust, or beneficiary in this declaration of trust. Its purpose was to declare the rights, interests, and obligations of the purchasers of the land as between themselves. It is averred in the complaint that the declaration of trust was executed "for the benefit of the said persons composing said syndicate." Mrs. Patrick was content to take Allen's notes for the purchase money, secured by a mortgage on the land. She neither stipulated for nor desired other security. The claim now set up against Underwood is plainly an afterthought.

We proceed to the consideration of the defense of the statute of limitations. While the transaction took place in the state of Nebraska, yet, the suit having been instituted in the courts of Colorado, the statute of limitations of the latter state must control; for it is well settled that the laws of the forum govern the plea of the statute of limitations. McCluny v. Silliman, 3 Pet. 270; Townsend v. Jemison, 9 How. 407; Walsh v. Mayer, 111 U. S. 31, 4 Sup. Ct. 260; Willard v. Wood, 164 U. S. 502, 17 Sup. Ct. 176. In McElmoyle v. Cohen, 13 Pet. 312, the court said:

"Whatever diversity of opinion there may be among jurists upon this point, we think it well settled to be a plea to the remedy, and consequently that the lex fori must prevail. It would be strange if in the now well-understood rights of nations to organize their judicial tribunals according to their notions of policy it should be conceded to them in every other respect than that of prescribing the time within which suits shall be litigated in their courts."

This case is cited and approved in the late case of Campbell v. City of Haverhill, 155 U. S. 610, 618, 15 Sup. Ct. 217. This doctrine is too well settled to require further discussion or citation of authorities. But, if in any jurisdiction the doctrine was doubtful, there is no room for contention in cases arising in the courts of Colorado, because that state has made the rule statutory. Section 2915, Mills' Ann. St. Colo., reads as follows:

"Cause of action without the state—six years. It shall be lawful for any person against whom any action shall be commenced, in any court of this state, where the cause of action accrued without the state, upon a contract or agreement, express or implied, or upon any sealed instrument in writing, or judgment or decree of any court, more than six years before the commencement of the action, to plead the same and give the same in bar of the plaintiff's right of action."

Other provisions of the statute of limitations of Colorado applicable to the case read as follows:

"The following actions shall be commenced within six years, next after the cause of action shall accrue, and not afterwards: First. All actions of debt founded upon any contract or liability in action. * * * Fourth. All actions of assumpsit or on the case founded on any contract or liability, express or implied." Mills' Ann. St. Colo. § 2900.

"All personal actions, on any contract not limited by the foregoing sections, or by any other law, in this state, shall be brought within three years after the accruing of the cause of action, and not afterwards." Id. § 2905.

Digitized by Google

It is clear that, under the foregoing provisions of the Colorado statute of limitations, if Mrs. Patrick ever had any right of action against Underwood for an amount of the purchase money equivalent to his interest in the land, it is barred. Authorities are not wanting to support the contention that the action would be barred under the three-years statute of limitations. Willard v. Wood, 164 U. S. 502, 17 Sup. Ct. 176; Dismukes v. Halpern, 47 Ark. 317, 1 S. W. 554; Willard v. Wood, 135 U. S. 309, 10 Sup. Ct. 831. But, as the action is unquestionably barred under the six-years statute, we express no opinion as to the applicability of the three-years statute. If Underwood was liable for any portion of the purchase money, the cause of action against him therefor accrued when the purchase money was due, and, as more than six years elapsed after the last note matured before this suit was brought, the action is barred. It is conceded that Underwood, if liable at all, is not liable on Allen's note, but on a different contract, and the payment alleged in the bill as having been made on January 23, 1893, was a payment on Allen's note, and will not serve to prevent the running of the statute in favor of Underwood on the alleged collateral promise on which he is sued. Moreover, that payment is not alleged to have been made by Allen. On the contrary, it is quite clear from the language of the complaint that it was not made by him, but by the Patrick Land Company, to which Allen had conveyed the land, and certainly no payment made by that company could have the effect to suspend the running of the statute of limitations as to Underwood. Wood, Lim. Act. 226, 228. We do not wish to be understood as intimating that, if the payment had been made by Allen, it would have the effect to extend the running of the statute as to Underwood, even though Underwood had been a joint maker of the note with Allen. Bergman v. Bly, 27 U. S. App. 650, 13 C. C. A. 319, and 66 Fed. 40. That question is not in the case. But it is urged in argument that Mrs. Patrick had no cause of action whatever until after the foreclosure proceedings and the ascertainment of the deficiency, and as that deficiency was not determined until May 7, 1894, the statute of limitations was not set in motion until that date. We are referred to the decision of the supreme court of Nebraska in Meehan v. Bank (Neb.) 62 N. W. 490, as determining that proposition. But examination of that case does not sustain the contention of learned counsel. All that is decided by that case is that in that state a creditor whose debt is secured by mortgage may either sue at law on his debt or proceed by foreclosure; but, having elected which means he will adopt, and commenced proceedings accordingly, he must exhaust the remedy so chosen before resorting to the other. But this Nebraska law can have no extraterritorial operation. It cannot suspend the running of the Colorado statute of limitations. Unquestionably Mrs. Patrick might have sued Underwood in Colorado, on the cause of action now declared on, at any time after the maturity of the notes. It is not believed that such suit would have precluded her from foreclosing the mortgage on the land in Nebraska at the same time; but, assuming that it would, she had her election to do the one thing or the other, but her election could in no

Digitized by Google

manner operate to deprive Underwood of any right under the statute of Colorado. She could not exercise her election to his prejudice, further than to bring suit against him immediately upon the maturity of the notes, which she had an undoubted right to do, if he was liable, as claimed, for any part of the purchase money of the land. It results that the lower court erred in instructing the jury to find a verdict for the plaintiff, and refusing to direct a verdict for the defendant. The judgment of the circuit court is reversed, and the cause remanded, with instructions to proceed in accordance with this opinion. So ordered.

(94 Fed. 516.)

CROSBY STEAM GAGE & VALVE CO. v. ASHTON VALVE CO.

(Circuit Court of Appeals, First Circuit. May 4, 1899.)

No. 264.

1. PATENTS—INVENTION.
   In a safety valve, the making of an extension consisting of two rods, upward, within and through the top of the valve case, and above the muffler, for the purpose of affording means for controlling from the outside the steam-regulating device, does not, under the circumstances of this case, involve patentable invention.

2. SAME—SAFETY VALVES.
   The Lohbiller patent, No. 496,058, for improvements in safety valves, is void for want of invention.

Appeal from the Circuit Court of the United States for the District of Massachusetts.

This was a suit in equity by the Crosby Steam Gage & Valve Company against the Ashton Valve Company for alleged infringement of a patent for improvements in safety valves. The circuit court adjudged that the patent was valid, and had been infringed by defendant, and entered a decree for complainant. From this decree, the defendant has appealed.

Ralph W. Foster (Joshua H. Millett, on the brief), for appellant.
James E. Maynadier and William Maynadier, for appellee.

Before COLT and PUTNAM, Circuit Judges, and WEBB, District Judge.

PUTNAM, Circuit Judge. This is a suit against an alleged infringer by the holder of letters patent, issued April 25, 1893, to Anton Lohbiller, for improvements in safety valves. Only one claim is in issue (the third), as follows:

"The combination in a safety valve and muffler of a valve seat, valve, and a steam-regulating device encircling the valve seat, and extending upward within and through the top of the valve case, and above the muffler, whereby the regulating device may be operated without removing the muffler or any part of the valve case, all substantially as specified."

The case was heard in the circuit court, on the merits, on bill, answer, and proofs, and an interlocutory decree was entered for a master and an injunction, although the learned judge who sat in that

Digitized by Google

court expressed doubt as to the validity of the patent. The only novelty covered by the claim in issue is the extension upward within and through the top of the valve case, and above the muffler, of means of controlling from the outside the regulating device. This extension, as shown in the drawings and specification, is by means of two straight rods passing vertically from the regulating ring, through the valve casing and the muffler, to points above the muffler and exterior to it. It is claimed that this was the first time in which such an extension appears in connection with a pop valve having a muffler. There is, perhaps, no doubt on the question of mere novelty; also, there is no doubt on the question of utility, as the device permits the regulating of the valve without removing the muffler, as stated in the claim.

The difficulty is on the question of invention. It is admitted that in the earlier art such extensions had been made through the casings of valves which had no mufflers. The thought involved in the mere idea of having some contrivance by which any interior work can be controlled through a rod extending exteriorly, thus avoiding the necessity of taking apart, is, of course, a primary one in all the arts; so that the suggestion of making such a connection in this case clearly involved no invention. This is illustrated by a patent taken out by the same patentee, dated November 17, 1891, for a safety valve without a muffler, in the specification of which, after describing a rod, called there a "pin," which serves the same purpose as the rods in the case at bar, and which pin did not extend through the upper part of the safety-valve case, he said:

"It is obvious that the pin might be extended upward, and have its wrench block secured at the top of the highest part of the casing if desired."

He added that great advantage would be derived therefrom when the valve is used on locomotive boilers. Moreover, there is nothing called to our attention, or which we have found, which shows that there was any difficulty in making the extension, or any ingenuity involved in doing it. We therefore necessarily conclude that no inventive idea is covered by the claim in issue; and, inasmuch as the decree of the court below, although an interlocutory one, followed a hearing of the merits on bill, answer, and proofs, and the whole record is before us, we are able to dispose finally of the case, in accordance with what is now the settled rule of practice. The decree of the court below is reversed, and the case is remanded to that court, with directions to dismiss the bill with costs; and the costs of appeal are awarded to the appellant.

(94 Fed. 575.)

ANDRUSS et ux. v. PEOPLE'S BUILDING, LOAN & SAVING ASS'N.

(Circuit Court of Appeals, Fifth Circuit. May 31, 1899.)

No. 787.

1. BUILDING AND LOAN ASSOCIATIONS—USURY—WHAT LAW GOVERNS.
   Where the by-laws of a building and loan association provide that all payments shall be made to its secretary at the office of the association

Digitized by Google

in the state in which it is incorporated, and a bond and mortgage executed to the association by a borrowing stockholder each contain a stipulation that it is to be governed by the laws of such state, the contract will not be held usurious, if not so by the laws of such state where it is to be performed.

2. JUDICIAL NOTICE—FEDERAL COURTS—STATUTES OF ANOTHER STATE.
A federal court sitting in one state will take judicial notice of the public statutes of another state.

3. BUILDING AND LOAN ASSOCIATIONS—USURY—NEW YORK STATUTES.
Under the statutes of New York, the taking of premiums for loans made by building and loan associations does not render them usurious, under the general usury statutes.[1]

4. SAME—BORROWING STOCKHOLDERS—FORFEITURE OF STOCK.
A borrowing stockholder in a building and loan association, whose stock has been forfeited by the association, in accordance with its rules, for default in payment of dues, is not entitled to credit on his loan for the amount paid thereon.

5. HOMESTEAD—EXECUTION OF DISCLAIMER.
The execution and recording of a disclaimer of homestead rights by a husband and wife, in property not at the time occupied as a homestead, for the purpose of procuring a loan on such property, will be given effect as an abandonment in favor of the mortgagee.

Appeal from the Circuit Court of the United States for the Northern District of Texas.

This is a bill in equity to foreclose a mortgage. It is filed by the People's Building, Loan & Saving Association, a corporation organized under the laws of the state of New York, against George W. Andruss and Hannah Andruss, residents and citizens of Texas. The material facts, as agreed on between the parties, are as follows: "That on the 3d day of March, 1893, the defendants, George W. Andruss and his wife, Hannah Andruss, entered into and executed and duly acknowledged a certain contract in writing with R. H. Andruss, a contractor, wherein and whereby the said contractor obligated himself to build on the premises hereinafter described, for the defendants in said cause, a certain two-story rock and brick house, 25 by 100 feet, within a period of three months from the date of said contract, and said contractor obligated himself by the terms of said contract to furnish all materials, and in a good, workmanlike manner to build and finish said house for said defendants; and, as a consideration therefor, by the terms of said contract said defendants agreed to pay said contractor the sum of $4,000. That thereafter said house was built and finished as above specified, and that whatever lien was acquired on said house and premises by the said R. H. Andruss was duly assigned and transferred by him on, to wit, the 3d day of March, 1893, to plaintiff, and that plaintiff is now the owner of whatever lien is so acquired as aforesaid to secure the payment of the bond sued upon. That defendant George W. Andruss applied to plaintiff for the advance of the money in question for the purpose of enabling him to build said house in accordance with said contract. That on, to wit, the 18th day of March, 1893, the plaintiff loaned to the defendants the sum of $3,000, less $300, which was reserved by the plaintiff as a bonus or premium on said loan, as especially provided for in the charter and by-laws of plaintiff. That in consideration therefor said defendants executed and delivered to plaintiff the bond sued upon, bearing said last-named date, and fully described in plaintiff's bill. That said bond is hereto attached, and hereby referred to and made a part hereof. It is hereby agreed that ten per cent. of the amount due on said bond is a reasonable attorney's fee for bringing suit on said bond in foreclosing the said lien. That on the 18th day of March said defendants, for the purpose of further securing the payment of said sums of money in said bond according to its legal tenor and effect, also executed, acknowledged, and delivered to plaintiff their certain deed of trust in writing, sued upon, fully described in plaintiff's bill, wherein and

[1] See note at end of case.

Digitized by Google

whereby the defendants conveyed to E. A. Walton, as trustee for plaintiff, lot No. 10, block No. 6, in Bishop's addition to the city of Dublin, in Erath county, state of Texas. Said deed of trust is hereto attached, and hereby referred to and made a part hereof. It is admitted that the plaintiff is a building and loan association, with its domicile, principal office, and headquarters in the city of Syracuse, state of New York; that its principal office and domicile was at Geneva, state of New York, at the time said contracts were executed, and that on the 11th day of September, 1890, it procured a permit from the state of Texas, through the secretary of state of Texas, to do business in the state of Texas, as a building and loan association, for the period of ten years next after said date; that a copy of the articles of association and by-laws of said association are attached to the statement of facts in case of Plaintiff v. W. T. Leggett in this court, and hereby referred to and made a part hereof; that upon the 1st day of February, 1893, the defendant George W. Andruss, upon written application, procured thirty shares of stock of plaintiff company in series or class A, evidenced by certificate No. 5,841, to be paid for as provided in said certificate, which certificate is hereto attached, and hereby referred to and made a part hereof. Said stock was procured by said Andruss with a view of borrowing said money evidenced by said bond for $6,000. That at the time the defendant procured said loan the said George W. Andruss transferred said stock to plaintiff to further secure the payment of said bond. It is admitted that said defendants paid on said stock the sum, in accordance with the terms thereof, of $30 per month for the month of February, 1893, and for each and every month thereafter up to and including the month of August, 1896, aggregating the sum of $1,290; that the defendants paid the interest and premium stipulated in said bond for the month of June, 1893, and for each and every month thereafter up to and including the month of August, 1896, aggregating the sum of, to wit, $975; that also the defendants paid the quarterly dues on said stock, in accordance with the charter and by-laws and the terms of said certificate, up to August, 1896, to wit, the sum of $7.50 each quarter, aggregating the sum of $105; that the defendant George W. Andruss was fined the sum of $18 for failure to pay the installments on said stock promptly, as required by the charter and by-laws of plaintiff, all of which payments are evidenced by defendants' pass book, which is hereto attached, and hereby referred to and made a part hereof. It is further admitted that neither the defendants nor any other person has paid any installment on said stock, or any monthly installment, interest, or premium on said bond, since the month of August, 1896; that on, to wit, the 28th day of May, 1897, the defendants having failed to insure the house on said premises for the benefit of plaintiff, on said day the plaintiff was compelled to insure said house against damage or loss by fire, for its own protection, in the Scottish Union & National Insurance Company, for the period of one year, and was compelled to pay the sum of $33.75; that plaintiff made demand in writing of defendants in the months of September, October, November, and December, 1896, and January, February, March, April, May, and June, 1897, for said monthly installments of stock dues which defendants owed plaintiff on said stock for each month named above; that the defendants were fined ten cents on each share of stock held by him, by the directors of plaintiff, for his failure to pay the said stock dues for the months of September and October, 1896, and were fined twenty cents on each share of said stock for the months of November and December, 1896, and January, February, March, April, May, and June, 1897, all of said fines aggregating the sum of $54; that by reason of the failure to pay said stock dues as aforesaid, and said fines, the said thirty shares of stock, and all moneys paid thereon, were forfeited by the directors of plaintiff company in accordance with article 12 of plaintiff's articles of association, and in accordance with the law of the state of New York which authorizes such forfeiture."

The bond referred to in the agreed statement of facts is as follows:

"Know all men by these presents, that we, George W. Andruss and Hannah Andruss (his wife), of Dublin, in the county of Erath, and state of Texas, are held and firmly bound unto the People's Building, Loan and Saving Association, a body corporate, created and duly incorporated under and in compliance with the laws of the state of New York, located at Geneva, in

Digitized by Google

the county of Ontario, and state of New York, in the sum of six thousand ($6,000) dollars, lawful money of the United States, to be paid to the association aforesaid, or to its certain attorneys, successors, or assigns, for which payment, well and truly to be made, we do bind ourselves and our heirs, executors, administrators, and assigns, and every of them, firmly, jointly, and severally, by these presents. Witness our hand and seals this 18th day of March in the year of our Lord one thousand eight hundred and ninety-three. Whereas, the above-bounden George W. Andruss is a member and stockholder of the People's Building, Loan and Saving Association, and has received from it, as such member, under the articles of incorporation, by-laws, and regulations of said association, an advance to him of $100 per share upon the value of thirty (30) shares of stock, in anticipation of their par value at the time when such shares shall mature: Now, the condition of this obligation is such that if the above-bounden George W. Andruss, his heirs, executors, administrators, or assigns, shall well and truly pay or cause to be paid unto the said the People's Building, Loan and Saving Association, or its certain attorney, successors, or assigns, the just and full sum of three thousand dollars ($3,000) in the manner following, that is to say, thirty (30) dollars contribution of principal, and twelve (12) dollars and fifty (50) cents interest, and twelve (12) dollars and fifty (50) cents premium, each and every month from the date hereof, for such term as will secure to the said the People's Building, Loan and Saving Association the payment of the full sum of one hundred dollars on each and every one of the said thirty shares hereby secured to be paid, such payments to commence on or before Saturday, March 25, 1893, and to be continued and made on or before the last Saturday in each month thereafter until the expiration of said term, and also pay all dues, fines, and penalties that may be imposed upon the said George W. Andruss as a member of said association, pursuant to the articles of association and by-laws thereof, all of which are to be paid unto the treasurer of said association at Geneva, N. Y., and keep the obligations hereinafter contained, without fraud or delay, then this obligation to be void, otherwise to remain in full force and virtue. And it is hereby expressly agreed that should any default be made in the payment of any installment of principal, or any part thereof, or any interest or premium moneys, or any part thereof, hereby secured to be paid, or any dues, fines, or penalties imposed as aforesaid, or in the payment of the taxes, assessments, and insurance as hereinafter provided, and should the same remain unpaid and in arrears for the space of three months after the same shall have become due and payable, that then and in that case the whole principal sum hereby secured to be paid, together with the interest and premium thereon, shall become due and payable immediately thereafter, although the period above limited for payment thereof may not have expired, anything herein contained to the contrary notwithstanding; and it is further agreed that the said parties of the first part shall pay a reasonable attorney's fee in case suit is brought to enforce the conditions of this instrument. And it is further agreed by and between the parties to these presents that the said parties of the first part shall and will keep the buildings erected and to be erected on the lands described in the trust deed herewith executed, and collateral hereto, insured against loss or damage by fire, by solvent insurers, and in an amount of at least three thousand ($3,000) dollars, and approved by said party of the second part, and assign the policy and certificate thereof to said party of the second part, its successors or assigns, and in default thereof it shall be lawful for said party of the second part to effect such insurance, as mortgagee or otherwise, and the premium or premiums paid for effecting and continuing the same shall be a lien on said premises, added to the amount secured by these presents, and payable on demand, with interest at the rate of six per cent. per annum. * * * It is further agreed by and between the parties to these presents that this instrument is made under and controlled by the laws of the state of New York. In witness whereof, the parties of the first part have hereunto set their hands and seals the day and year first above written. George W. Andruss. [Seal.]
"Hannah Andruss. [Seal.]"

The deed of trust referred to in the bond was offered in evidence. It is dated March 18, 1893, executed by said defendants Andruss and wife, and E. A. Wal-

Digitized by Google

ton is made trustee. It conveys the property described in the decree. It refers to the real estate conveyed as being the "same premises conveyed to George W. Andruss by T. C. Hill, agent." It contains clauses "releasing and waiving all rights under and by virtue of the homestead exemption laws of the state of Texas, and all rights of dower." It states the loan of $3,000, the payments to be made, and states that "they are to be paid unto the treasurer of said association, at Geneva, New York, according to the conditions of a bond this day executed and delivered by the said George W. Andruss and Hannah Andruss. * * *" The deed of trust also contains this provision: "And it is expressly agreed and understood that this instrument is made under and controlled by the laws of the state of New York."

The by-laws of the appellee were in evidence. Article 16 is as follows:

"All remittances for admission, monthly and quarterly installments, fines, penalties, interests, and premiums, and all other payments, shall be made to the secretary of the association, at their principal office, in Geneva, N. Y."

The circuit court rendered the following decree:

"April 18, 1898.

"On this day came on said cause to be heard before the United States circuit [court], at a regular term thereof, at Waco, Texas, and the solicitors for plaintiff and for each of the defendants in said cause being present and having announced 'Ready for trial,' and it appearing to the court that at a former day of the present term of this court the case of Hannah Andruss and George W. Andruss v. The People's Building, Loan & Saving Association (No. 43 in equity) in this court was by motion consolidated with the above-entitled cause (No. 28 in Equity),—People's Building, Loan & Saving Association v. G. W. Andruss et al.,—and the issues and the parties in said two suits Nos. 43 and 28 being identical, after hearing the evidence and argument of counsel, are disposed of as follows: The court orders and decrees that the plaintiff, the People's Building, Loan & Saving Association, a corporation, do have and recover of and from the defendant George W. Andruss the sum of $3,828.75, amount of principal, interest, premium, and attorney's fees due on the bond sued on, and $33.75 paid as insurance premium with interest thereon at the rate of 5 per cent. per annum from the date hereof, together with all costs of suit. It is further ordered and decreed by the court that plaintiff's deed of trust lien executed by defendants, George W. Andruss and wife, Hannah Andruss, on the 18th day of March, 1893, to secure said sums of money, on the north half of lot ten (10) in block six (6) of Bishop's addition to the town of Dublin, in Erath county, Texas (and for a further description of said premises reference is hereby made to said deed of trust, which is duly recorded upon the Deed of Trust Records of Erath County, Texas, in volume H, at pages 487 to 494, filed for record March 18, 1893), be, and the same is hereby, foreclosed on said premises, against all the right, title, or interest of each and all of said defendants, George W. Andruss and Hannah Andruss, in and to said premises. It is further ordered that unless the defendants pay to the clerk of this court for the satisfaction of this decree the full amount of said decree, and all interest due thereon, within thirty days from the date hereof, it is ordered that said property be sold under an order of sale issued by this court as herein directed at public vendue at the courthouse door of Erath county, Texas, to the highest bidder, for cash, for the satisfaction of said decree in favor of plaintiff, and the court hereby appoints Thomas P. Martin commissioner to sell said property. And it is ordered that said commissioner shall give public notice of the date and place of such sale of said property by causing notice of such sale to be published once a week for at least four weeks prior to such sale in at least one newspaper, printed regularly, issued and having a general circulation in the county of Erath, and said state of Texas; that such notice shall describe said property, and give the date and place of such sale. And said commissioner is ordered to make a written report of such sale, at the earliest time practicable thereafter, to this court. And, upon confirmation of said sale by this court, the proceeds of such sale, or so much thereof as may be necessary, shall be applied to the satisfaction of said decree in favor of plaintiff as aforesaid, and the balance, if any, shall be paid over to defendant Hannah Andruss; and, should said property fail to sell for sufficient to pay off said decree, and all costs in this behalf incurred, then it is ordered that, after the confirmation of such sale, execution shall issue against

Digitized by Google

said George W. Andruss for the balance due plaintiff on said decree, and after confirmation of said sale the said commissioner shall convey said premises, by warranty deed, to the purchaser thereof, and said purchaser shall have his writ of assistance at once to get possession thereof."

The other facts necessary to an understanding of the case are stated in the opinion.

George W. Andruss and Hannah Andruss appealed from the decree of the circuit court. The assignments of error are based on the said decree.

F. E. Dycus and W. S. Essex, for appellants.

Drew Pruit, for appellee.

Before PARDEE, McCORMICK, and SHELBY, Circuit Judges.

SHELBY, Circuit Judge. 1. The debt which is the subject of this suit is proved by a bond which is secured by a mortgage. The appellants, who are the obligors in the bond and the mortgagors in the mortgage, are citizens of Texas. The appellee, who is the obligee in the bond and the mortgagee in the mortgage, is a New York corporation. Both the bond and the mortgage are made payable at Geneva, in the state of New York. The by-laws of the appellee corporation provide that all payments shall be made to the secretary of the association, at Geneva, N. Y. The appellee corporation is a building and loan association organized pursuant to statutes of the state of New York, and both the bond and the mortgage contain a stipulation that it is to be governed by the laws of that state. In view of all these facts, we hold that the contracts in question are not usurious, if they are valid under the laws of the state of New York, the place of performance. Andrews v. Pond, 13 Pet. 65–78; Association v. Logan, 14 C. C. A. 133, 66 Fed. 827; Miller v. Tiffany, 1 Wall. 298; Sturdivant v. Bank, 9 C. C. A. 256, 60 Fed. 730; Dugan v. Lewis, 79 Tex. 246, 14 S. W. 1024; Association v. Tinsley (Va.) 31 S. E. 508.

2. It is not necessary, as claimed by the appellants, to offer evidence of the public statutes of another state. The United States courts sitting in Texas will take judicial notice of the public statutes of New York. Owings v. Hull, 9 Pet. 607; Gormley v. Bunyan, 138 U. S. 623, 11 Sup. Ct. 453.

3. While it is true, as claimed by appellants, as a general proposition, that contracts in New York for more than 6 per cent. interest are usurious and void, yet an exception is made by statute of building and loan associations, or at least it is provided that premiums for loans may be paid such associations without a violation of the usury laws. The following is the statute:

"No holder of redeemed shares shall claim to be exempt from making the monthly payments provided in the articles of association, upon the ground that by reason of losses or otherwise the association has continued longer than was originally anticipated, whereby the payments made on such shares may amount to more than the amount originally advanced, with legal interest thereon; nor shall the imposition of fines for non-payment of dues or fees, or other violation of the articles of association, nor shall the making of any monthly payment required by the articles of association, or of any premium for loans made to members be deemed a violation of the provisions of any statute against usury." 1 Rev. St. N. Y. (4th Ed.) p. 1290; Laws N. Y. 1851, c. 122, § 7.

Digitized by Google

This statute prevents the contracts between the parties from being usurious under the general statutes. Association v. Read, 93 N. Y. 474.

4. The claim of the appellant George W. Andruss, that he is entitled to credit on his bond for borrowed money on account of the payments he made on his subscription for stock, cannot be sustained. He was a subscriber for stock in the association, and he was under contract to pay for it, just as any other stockholder. Payments on the stock, his stock being forfeited under the rules of the association, cannot be applied to his debt on account of the loan. Blakeley v. Association (Tex. Civ. App.) 26 S. W. 292; Association v. Logan (Tex. Civ. App.) 33 S. W. 1088.

5. On the 3d day of March, 1893, the appellants both signed a writing designating certain real estate as a homestead, and concluding with this statement:

"And we do hereby exempt from the operation of the homestead law, and do disclaim any homestead right in and to, the north half of lot number ten in block number six of Bishop's addition to the town of Dublin."

This instrument was duly recorded.

George W. Andruss testifies that:

"The purpose of executing said instrument was to enable me to procure the loan on said property. * * * My purpose in getting the money was for the purpose of improving said property."

He admits that he vacated the property, but he says this was only temporary, for the purpose of allowing the building to be erected. He further testifies:

"Myself and wife executed and recorded the instrument [the homestead disclaimer] in good faith, and it was our intention to relinquish our homestead right in the north half of lot ten, in said instrument."

Having executed this relinquishment to secure the money, the defendants offer to repudiate it in defense of a suit to collect the money. This cannot be permitted. In the case of Jacobs v. Hawkins, 63 Tex. 3, the supreme court of Texas said:

"In cases in which property has not been used as a homestead, or is not so used, the declarations of a husband would seem to be admissible for the purpose of showing that there was no intention so to use it as to make it the homestead; and this would seem to be true where a place formerly used as a homestead is not longer occupied, and so for the purpose of indicating an intention never again to use it, which, coupled with the act of removal, would amount to an abandonment."

Another case which is analogous to the one at bar is Kempner v. Comer, 73 Tex. 202, 11 S. W. 196. The owners were improving the property for the purpose of making the same the business homestead, but had not sufficient means to complete the improvements; and, in order to procure a loan on the property to make the improvements already begun, the husband and wife executed a renunciation, renouncing all homestead interest in the property. The supreme court said:

"But the parties claiming homestead expressly abandoned and renounced their intention to occupy and use the premises as a homestead before it was so used, and this renunciation was made, not by mere declarations, but in the solemn form of a deed, the wife joining; and all this was done in order to include the

Digitized by Google

property in the deed of trust then being made to secure advances and borrowed money. In such case the law will give effect to the renunciation. There was in fact no homestead in the premises when renounced."

The renunciation, as this case shows, would have no effect if the premises had really been occupied as a homestead, and if the renunciation had only been made to avoid the effects of the homestead laws. But here the appellant Andruss testifies that the relinquishment was in good faith, and the evidence shows an actual abandonment of the lot as a business homestead. The money having been lent on the representation that the property was abandoned as a homestead, and having been used to build a house on the lot, it would be manifestly inequitable to allow the claim of homestead to be now used to defeat the deed of trust. The judgment of the circuit court is affirmed.

NOTE.

Statutory Exemptions of Building and Loan Associations from the Operation of the Usury Laws.

I. VALIDITY OF CONTRACTS FOR PREMIUMS AND INTEREST.

[a] (Iowa Sup. 1880) Before the passage of section 1186 of the Code, declaring that loans made by a building association shall not be deemed usurious by reason of any dues, fines, or premiums paid in addition to the legal rate of interest, such an association could not lawfully exact a premium fixed by its articles of incorporation, and thus obtain more than the legal rate.—Association v. Heider, 5 N. W. 578, 55 Iowa, 424.

[b] (Minn. Sup. 1895) A building and loan association organized under Gen. St. 1878, c. 34, § 109 (Gen. St. 1894, § 2794), and doing a local business only, is not subject to the usury laws where it loans its funds to members at a rate of interest not in itself usurious, and, in addition thereto, receives a premium for such loans, though the premium and interest together exceed the legal rate.—Association v. Lampson, 62 N. W. 544, 60 Minn. 422.

[c] (Neb. Sup. 1878) A saving association was incorporated under Rev. St. 1866, c. 25, § 123, providing that any number of persons may be incorporated for the transaction of any lawful business, and that such association may make by-laws not inconsistent with any existing laws for the management of its affairs. Its articles of association provided that its funds should be put up at auction, and sold to the member who should offer the highest bonus therefor; that the latter should execute a mortgage for the full amount, which should bear interest at 12 per cent. per annum, payable monthly; and that the purchaser of $200 should be held to have received his final dividend on one share of stock, which should revert to the association. *Held* that, though the association claimed to be a building association, it had no authority to charge and receive interest on loans in excess of the maximum rate allowed by law, and that all such loan contracts for interest in excess of such rate were usurious.—Association v. Graham, 7 Neb. 173.

[d] (N. J. Sup. 1861) The bonds and mortgages taken by loan fund associations organized under the statute (Nix. Dig. p. 75) are not void for usury, although more than the legal rate of interest is taken.—Association v. Marsh, 29 N. J. Law, 225.

[e] (N. Y. App. 1883) The constitution of a building and loan society provided that, where several members applied for a loan at the same time, the loan should be given to the member paying the highest premium. *Held*, that the taking of such premiums does not render the loan usurious, and is authorized by Laws 1875, c. 564.—Association v. Read, 93 N. Y. 474.

[f] (N. Y. Sup. 1857) Since Act April 10, 1851, § 7, providing that premiums paid by members shall not be a violation of any statute against usury, repealed the statutes prohibiting usury so far as building and loan associations were concerned, a contract whereby the member paid interest on the

Digitized by Google

premium as well as on the loan was not usurious.—Association v. Webster, 25 Barb. 263.

[g] (N. C. Sup. 1895) The transaction between a quasi building and loan association and its borrowing stockholder is simply a loan, and is usurious, where he is liable, under certain circumstances, to pay more than the amount loaned and legal interest.—Meroney v. Association, 21 S. E. 924, 116 N. C. 882, 47 Am. St. Rep. 841.

[h] (Ohio D. C. 1882) In view of the statute giving a building and loan association the right to recover such premium as is agreed on, in addition to principal and interest of a loan, the usury laws are no protection against an agreement to pay premiums.—Association v. Boning, 6 Ohio Dec. 1149.

[i] (Pa. Co. Ct. 1872) Under Act April 12, 1859, providing that premiums, fines, and interest charged by building associations shall not be usurious, but "may be collected as debts of like amount are now collected," an association can enforce the contracts of its members as to premiums, fines, and interest. —Kehler v. Miller, 4 Leg. Gaz. 125.

II. CONSTITUTIONALITY AND VALIDITY OF STATUTES.

[a] It is within the power of the legislature to exempt building and loan associations from the operation of the general usury laws, and such statutes are valid and constitutional.

—(Ala. Sup. 1881) Association v. Robinson, 69 Ala. 413; Association v. Lake, Id. 456;

(Ind. Sup. 1878) McLaughlin v. Association, 62 Ind. 264.

[b] (Conn. Sup.) The act of 1856, validating certain usurious contracts previously made, which under the statutes in regard to usury were void in part, is not unconstitutional.—(1859) Association v. Allen, 28 Conn. 97; (1861) Welch v. Wadsworth, 30 Conn. 149.

[c] (Ky. App. 1897) Ky. St. § 864, requiring the borrowing members of building and loan associations to pay dues or premiums in addition to interest at the rate of 6 per cent., which is the rate fixed by law as to all borrowers, violates section 3 of the bill of rights, providing that "no grant of exclusive, separate public emoluments or privileges shall be made to any man or set of men, except in consideration of public services."—Simpson v. Association, 41 S. W. 570.

[d] (Ill. Sup. 1885) Section 10 of the building association act of 1872 is not in conflict with the constitutional prohibition against special or local acts regulating interest on money.—Freeman v. Association, 28 N. E. 611, 114 Ill. 182.

[e] (Md. App. 1878) Act 1872, c. 178, exempting building and loan associations from the operation of the general usury laws, is unconstitutional, as special legislation.—Land Co. v. Uhler, 48 Md. 455.

[f] (Minn. Sup. 1899) Gen. St. 1894, §§ 2218, 2794, exempting building associations from the operation of the usury laws, is not unconstitutional, as class legislation.—Zenith Building & Loan Ass'n v. Heimbach, 79 N. W. 609.

[g] (Neb. Sup. 1896) That part of Act 1873 (Gen. St. p. 207), relating to building and loan associations, which exempts such associations from some features of the general interest laws, does not violate Const. art. 3, § 15, prohibiting the legislative grant of any special privilege, immunity, or franchise.—Association v. Drummond, 68 N. W. 375, 49 Neb. 200.

[h] (N. D. Sup. 1891) The provisions of Laws N. D. c. 184, § 11, placing building and loan associations incorporated under the laws of the state in a separate class, and excepting them from the usury law, will be construed to apply only to transactions of such an association with its own stockholders, and, as thus construed, it does not violate Const. N. D. § 11, requiring all laws of a general nature to have a uniform operation; or section 69, subd. 13, prohibiting any special law regulating the rate of interest.—Trust Co. v. Whithed, 49 N. W. 318, 2 N. D. 82.

[i] (N. D. Sup. 1891) The dealings of a building and loan association with their own stockholders differ from ordinary loan transactions to such an extent as to warrant the legislature in excepting such associations as to such dealings from the operation of the provisions of the general usury law.—Trust Co. v. Whithed, 49 N. W. 318, 2 N. D. 82.

Digitized by Google

[j] (Ohio Sup. 1872) A building and saving association may recover from a member interest on a loan made to him at a rate within the limits allowed by the statute under which the association was organized, though it exceeds the maximum rate allowed by the general law.—Lucas v. Association, 22 Ohio St. 339.

[k] (W. Va. Sup. 1898) Code, c. 54, § 26, in so far as it exempts building associations from the operation of the general law in relation to usury, is not unconstitutional.—Archer v. Association, 30 S. E. 241.

III. Operation and Effect of Statutes.

[a] (N. J. Ch. 1890) Act April 9, 1875, relating to building and loan associations, repealed so much of Act Feb. 28, 1849, as authorized the taking of premiums for loans. *Held*, that a building and loan association organized under the act of 1849 was entitled to the benefit of Act Feb. 29, 1876, which again permitted the taking of premiums without reorganizing under this last act.—Association v. Furey, 20 Atl. 890, 47 N. J. Eq. 410.

[b] (N. C. Sup. 1895) Act March 9, 1895, restricting, in its first section, building and loan associations to 6 per cent. interest, if held to allow greater interest by the provision of a subsequent section authorizing them to charge costs, expenses, interest, premiums, and fines, is repealed by Act March 13, 1895, prohibiting any one, without exception, to exact more than 6 per cent. for the loan of money.—Meroney v. Association, 21 S. E. 924, 116 N. C. 882, 47 Am. St. Rep. 841.

[c] (Va. Sup. 1898) Act March 1, 1894, relating to the incorporation of building and loan associations, and ratifying the charters of such associations theretofore granted by courts, under Code, § 1145, is not retroactive in its effect, so as to remove the illegality of a usurious contract, entered into by such associations prior to its passage.—Crabtree v. Association, 29 S. E. 741.

[d] (Va. Sup. 1898) A building association was organized under a charter granted by a corporation court in 1887, authorizing it to make loans to its members and others upon terms savoring of usury. An act of the legislature approved January 23, 1896 (Acts 1896, p. 170), provided that the charter so granted, which had been accepted and acted under, should be declared, as to all contracts made according to its provisions, as valid as if originally granted by the legislature. *Held*, that under the foregoing provision a contract for a loan made with this association prior to the act of January 23, 1896, was valid, and not usurious, though in violation of the general law against usury.—Smoot v. Association, 29 S. E. 746.

IV. Construction of Statutes.

1. Nature of the Contract.

[a] Contracts, in order to be brought within the statutory exemption from usury, must be executed in strict conformity with the statute.

—(Md. App. 1876) Birmingham v. Association, 45 Md. 541;

(Pa. Sup. 1880) Stiles' Appeal, 95 Pa. St. 122.

[b] (Conn. Sup. 1855) The act "authorizing the establishment of savings and building associations," passed in 1850, does not exonerate all contracts, made by such associations with their members, from the operation of the statute relating to usury.—Association v. Wilcox, 24 Conn. 147.

[c] (Conn. Sup. 1855) Under St. 1850, authorizing a savings and building association to receive from its members a bonus for a loan, in addition to the legal interest, and to lend money to persons not members at the legal rate, an association which lends money to one not a member, and receives a bonus therefor, besides the lawful rate of interest, can only recover from such borrower the principal sum.—Mechanics' & Working Men's Mut. Sav. Bank & Building Ass'n v. Meriden Agency, 24 Conn. 159.

[d] (Kan. Sup. 1877) Loans made by a loan and building association to persons who are not members are subject to the general laws as to interest and usury. Interest exceeding 12 per cent. cannot be charged; and, if more is reserved, the borrower is entitled to compel a return of his note and mortgage, on a tender of the sum loaned, and interest at that rate.—Association v. Thompson, 19 Kan. 321.

Digitized by Google

[e] (Md. App. 1876) The transaction is usurious where an applicant for a loan to a loan association of which he is not a member is required to subscribe for some of its shares as a condition of receiving a loan, and, upon a loan to him of the sum of $3,025 upon a compliance with such condition, he is required to secure it by mortgage providing that he shall pay the association the weekly sum of $14.85 for 300 weeks, together with taxes on the mortgage debt and the annual rent, and taxes on the mortgaged property, and all fines imposed upon him by the association, and also that he release to it "all his interest in and the shares hereby redeemed and to all profits that may hereafter be made by the mortgagee."—Williar v. Association, 45 Md. 546.

[f] (Pa. Sup. 1877) The statutory exemptions of building and loan associations from the operation of the usury laws do not apply to loans made to persons who are not members, or who are not sui juris and so incapable of acquiring membership, as married women.—Wolbach v. Association, 84 Pa. St. 211.

[g] (Pa. Com. Pl. 1896) To entitle a building and loan association to the privileges given by the act of 1859 and general corporations act of 1874 and its supplements, which provide that "no premiums, fines or interest on such premiums, that may accrue to building and loan associations shall be deemed usurious," the premium must be a bona fide bid for the preference or priority in an open meeting where the money on hand is offered for loan to competing stockholders.—Association v. Riggle, 4 Pa. Dist. R. 617.

[h] (W. Va. Sup. 1882) Under the provisions of Code, c. 54, relating to homestead and building associations, it is the duty of such an association to see that money paid by its members on loans is used by such members in buying lots or houses or in building or repairing houses; and its failure to perform this duty forfeits the privilege conferred on it by the provisions of the twenty-seventh section of the chapter named, exempting it from the operation of the usury law in receiving premiums on money so loaned.—Pfeister v. Association, 19 W. Va. 676.

2. *Character of the Association.*

[a] The exemption from the penalties of usury accorded to building and loan associations organized in Nebraska does not extend to contracts made in this state by a foreign building association.

—(Neb. Sup. 1899) Association v. Strine, 78 N. W. 377;

(Pa. Com. Pl. 1896) Association v. Riggle, 4 Pa. Dist. R. 617.

[b] (Ill. Sup. 1898) A Missouri building association loaned money in Illinois at a usurious rate, unless governed by Starr & C. Ann. St. p. 632, providing that no interest, premiums, or fines accruing to a building association shall be deemed usurious. Said act further provides (page 630) that the shares of stock in such associations shall be $100 each, payable in periodical installments not to exceed $2 per share. *Held*, that where the Missouri association was organized under an act authorizing the issuance of full paid-up interest-bearing stock, of the par value of $1,000 per share, to be matured when the dividends and sum invested equaled the full face value, which was not authorized by the local statute, the rule of comity did not apply, and the contract would be held usurious, since the building association provided for by the latter statute is not within the spirit and meaning, but is opposed to the idea of such an association as protected by the local statute.—Rhodes v. Loan Co., 50 N. E. 998, 173 Ill. 621.

[c] (Pa.) Act April 12, 1859, relating to contracts of loans by building associations incorporated under the act of 1850, does not apply to an unincorporated building association so as to entitle it to recover on its mortgages more money than was actually advanced, with legal interest.—(Sup. 1871) Jarrett v. Cope, 68 Pa. St. 67; (1879) Link v. Association, 89 Pa. St. 15; (Com. Pl. 1878) Hansbury v. Pfeiffer, 12 Phila. 250.

V. CHARTER PROVISIONS.

[a] (Ga. Sup. 1857) A loan association, incorporated by the legislature, by its constitution and by-laws, without the same being embodied in the act, may make contracts usurious by the state law, if its constitution and by-laws authorize them.—Association v. Richards, 21 Ga. 592.

Digitized by Google

[b] (Ky. App.) Where there is actual usury in a transaction between a building association and a subscriber, the association cannot protect itself by a provision in its charter that "no dues, premiums, interest, or fines that may accrue to the association, in accordance with its charter, shall be deemed usurious."—(1889) Association v. Johnson, 10 S. W. 787, 88 Ky. 191; (1890) Same v. Zeller, 12 S. W. 945.

[c] (N. J. Ch. 1861) A bond given to a building association by a shareholder recited that the obligor had agreed to accept, and had received from the association, $400 at the date of the bond, "upon and for the redemption of" the obligor's share. The condition of the bond was that said obligor should pay the association the sum of $7 on the third Monday of each month for the period of 10 years, or until the surplus assets of the association should be sufficient, over and above all its debts and liabilities, to pay to the holder of each unredeemed share the sum of $800, etc. *Held* that, as such contract was authorized by the charter of the association, it was exempt from the operation of the statute against usury.—Association v. Martin, 13 N. J. Eq. 427.

[d] (Va. Sup. 1898) A building association was organized under a charter granted by a corporation court. By Laws 1895–96, p. 537, § 5, a new charter was created adopting former by-laws not inconsistent, and providing that all contracts previously made between the company and its members under its former by-laws and charter, and not incompatible with the new charter, should be validated and confirmed. *Held*, that the legislature had power to, and did in granting the new charter, confirm and validate previous contracts which were usurious under the first charter, for the reason that such charter was granted by a court which has no power to permit loans savoring of usury.—Bosang v. Association, 30 S. E. 440.

(94 Fed. 266.)

DIMICK et al. v. SHAW.

(Circuit Court of Appeals, Eighth Circuit. April 17, 1899.)

No. 1,136.

1. EQUITY JURISDICTION—ENJOINING CONTINUING TRESPASS.
   A court of equity has jurisdiction of a suit to enjoin a trespasser from working a mine upon, and removing mineral from, land the title to which has been finally adjudicated in complainant's favor.
2. APPEAL—REVIEW OF INTERLOCUTORY ORDER GRANTING INJUNCTION.
   A circuit court of appeals will not disturb an interlocutory order granting an injunction where the questions of law or fact to be ultimately determined are difficult, and injury to the moving party will be immediate, certain, and great if the relief is denied, while the loss of the opposing party will be comparatively small if it is granted.

Appeal from the Circuit Court of the United States for the District of Colorado.

This is an appeal from an interlocutory order granting a temporary injunction restraining appellants from in any manner working the property known as the "Independent Mine," and from extracting or removing ores therefrom, or removing or selling any ores, until the final determination of the cause. The bill charges that the appellee is the owner of a certain large tract known as the "Baca Grant No. Four," his title thereto having lately been determined by the supreme court of the United States in the cause of Shaw v. Kellogg, 170 U. S. 312, 18 Sup. Ct. 632; that defendants, while said cause was pending in the supreme court, went into possession of the lands in controversy under verbal permission of appellee's manager for the purpose of prospecting only, until the final determination of the cause then pending in the supreme court; that after the final determination of that cause, and the decision of the court

Digitized by Google

that appellee was the owner of the tract, appellants were notified to quit the premises, but refused, and since then have commenced mining operations on a large scale in excess of the permission granted to them to prospect, and continue their mining operations and trespasses; that they are insolvent, and, unless enjoined by a court of equity, will commit an irreparable injury to appellee's property. Appellants filed an answer setting up, among other things, the same defenses which had been expressly adjudicated by the supreme court in the case of Shaw v. Kellogg, supra, and also that appellants' manager had verbally given them permission to prospect on the lands for minerals, and, in case of a final decision in favor of the appellee in that case, to make some fair and just arrangement with them; that they had discovered a valuable gold vein on the property, and, with the knowledge and consent of appellee, had expended large sums of money in developing the mine which is known as the "Independent Mine," but that now appellee refuses to give them any lease, or make any fair arrangement with them. A general replication was filed, and upon a hearing a temporary injunction granted.

Charles D. Hayt, Thomas Macon, and John R. Smith, for appellants.

Joel F. Vaile (Edward O. Wolcott and Elroy N. Clark, on the brief), for appellee.

Before CALDWELL, SANBORN, and THAYER, Circuit Judges.

CALDWELL, Circuit Judge. The answer challenging the appellee's title, and setting up an adverse superior title, is merely an effort to retry the question settled by the judgment of the supreme court in the case of Shaw v. Kellogg, supra. It requires no citation of authorities to sustain the proposition of appellee's counsel that a person going upon property by permission of a party while a suit in relation to the title of that property is pending cannot, after that suit has been determined in favor of his licensor, litigate the title over again on the same lines. The only question raised by appellants which it is necessary to notice on this appeal is that appellee has a complete and adequate remedy at law, and that by this proceeding appellants are deprived of their constitutional right to a trial by jury. This precise question, on facts identical in legal effect with the facts of this case, has been three times decided by this court. In Preteca v. Land Grant Co., 4 U. S. App. 326, 1 C. C. A. 607, and 50 Fed. 674, this court held that a court of equity had jurisdiction of a cause in which the averments in the bill were substantially the same as the averments of the bill in this case. In that case we said:

"A court of equity may take cognizance of a controversy to prevent a multiplicity of suits, although the exercise of such jurisdiction may call for the adjudication upon purely legal rights, and confer purely legal relief; and so a court has jurisdiction to restrain waste and trespass to land where the facts are of such a nature that the law cannot afford adequate relief. 1 Pom. Eq. Jur. §§ 243, 245, 252, 271, 274, and cases there cited. The bill avers that the complainant's title has been finally adjudicated in its favor by a court of competent jurisdiction in suits brought against persons in like situations with the defendants. The averments of the bill make the case one of equitable cognizance. Against irresponsible parties taking mineral out of the land and removing the same, and cutting and removing timber, actions of ejectment would have been wholly inadequate for the protection of the complainant's rights. It may be true that the complainant had a remedy at law, but 'it is not enough that there is a remedy at law; it must be plain and adequate, or, in other words, as practical and efficient to the ends of justice and its prompt administration as the remedy in equity.' Boyce v. Grundy, 3 Pet. 215; Oelrichs v. Spain, 15 Wall. 211, 228."

Digitized by Google

In Coal Co. v. McCaleb, 32 U. S. App. 330, 15 C. C. A. 270, and 68 Fed. 86, the court below had refused to grant an injunction against trespassers who had entered upon complainant's lands, and were mining and shipping coal, but this court reversed that decree, and held that equity had jurisdiction, and that complainant was entitled to an injunction. Judge Thayer, who delivered the opinion of the court in that case, said:

"It is now well settled by many adjudications, beginning with the case of Mitchell v. Dors, 6 Ves. 147, that an injunction may be granted to restrain a trespasser from entering into a mine and removing the minerals therefrom. Trespasses of that kind, as well as those which consist in cutting down and removing timber, or in removing buildings or other improvements of a permanent character standing upon lands, are readily enjoined, because, as has sometimes been said, such acts tend to destroy the estate, and to occasion irreparable loss and damage. Courthope v. Mapplesden, 10 Ves. 290; Scully v. Rose, 61 Md. 408; Erhardt v. Boaro, 113 U. S. 537, 5 Sup. Ct. 565; Jerome v. Ross, 7 Johns. Ch. 315; Hammond v. Winchester, 82 Ala. 470, 2 South. 892; Snyder v. Hopkins, 31 Kan. 557, 3 Pac. 367; Iron Co. v. Reymert, 45 N. Y. 703; 2 Beach, Inj. (1895) § 1155; High, Inj. (1st Ed.) § 469."

In Emigration Co. v. Gallegos, 61 U. S. App. 13, 32 C. C. A. 470, and 89 Fed. 769, this court held that a continuing trespass by a large number of persons, and constant and wrongful diversion of water through lands, which is continually depreciating their value, will give a court of equity jurisdiction, even without showing the insolvency of the defendants. In that case Judge Sanborn, speaking for the court, said:

"A continuing trespass upon real estate, or upon an interest therein, to the serious damage of the complainant, warrants an injunction to restrain it. A suit in equity is generally the only adequate remedy for trespasses continually repeated, because constantly recurring actions for damages would be more vexatious and expensive than effective. 2 Beach, Inj. §§ 1129, 1146; Tallman v. Railroad Co., 121 N. Y. 119, 123, 23 N. E. 1134; Uline v. Railroad Co., 101 N. Y. 98, 122, 4 N. E. 536; Galway v. Railroad Co., 128 N. Y. 132, 145, 28 N. E. 479; Evans v. Ross (Cal.) 8 Pac. 88."

In addition to what has been said, it is now the settled rule of this court and the other circuit courts of appeal which have had occasion to pass upon the subject that on appeals from interlocutory orders granting an injunction whenever the questions of law or facts to be ultimately determined in a suit are grave and difficult, and injury to the moving party will be immediate, certain, and great if it is denied, while the loss or inconvenience to the opposing party will be comparatively small if it is granted, and is protected by a good bond, the appellate courts will not disturb the order of the court below. City of Newton v. Levis, 49 U. S. App. 266, 25 C. C. A. 161, and 79 Fed. 715; Allison v. Corson, 60 U. S. App. 387, 32 C. C. A. 12, and 88 Fed. 581; Dooley v. Hadden, 38 U. S. App. 651, 20 C. C. A. 494, and 74 Fed. 429; Jensen v. Norton, 29 U. S. App. 121, 12 C. C. A. 608, and 64 Fed. 662.

Other questions have been presented by counsel in their argument, but, as this appeal is merely from an interlocutory order, they should not be determined until the proofs are all in. Upon the showing made by the appellee he was entitled to the injunction, and the order granting it is affirmed.

Digitized by Google

(94 Fed. 297.)

HALEY LIVE-STOCK CO. v. BOARD OF COM'RS OF ROUTT COUNTY.

(Circuit Court of Appeals, Eighth Circuit. April 17, 1899.)

No. 1,148.

FEDERAL COURTS—EFFECT OF STATE DECISION CONSTRUING STATUTE.

Where the sole grounds relied upon by a plaintiff in a suit in a federal court to entitle him to a recovery, as disclosed by his pleading and the opening statement of his counsel, were the invalidity, under the statutes of the state, of certain tax proceedings, and the identical proceedings had been adjudged valid by the supreme court of the state, though not in a suit between the same parties, so as to render the matter res judicata as between them, its decision was nevertheless binding on the federal court as a construction of the local statutes, and the direction of a verdict for defendant by the court, on the conclusion of the plaintiff's opening statement, was not error.[1]

In Error to the Circuit Court of the United States for the District of Colorado.

William T. Hughes, for plaintiff in error.

Henry T. Sale (D. E. Parks, on the brief), for defendant in error.

Before CALDWELL, SANBORN, and THAYER, Circuit Judges.

THAYER, Circuit Judge. This suit was brought by the Haley Live-Stock Company, the plaintiff in error, against the board of county commissioners of Routt county, in the state of Colorado, the defendant in error, to recover the sum of $12,725.50, which the plaintiff company claimed to have paid under protest to the treasurer of Routt county to obtain the release of some 700 head of cattle that had been seized to compel the payment of certain taxes which were assessed against Ora Haley for the year 1884. The suit was brought upon the theory that the assessment was absolutely void as to Haley, and afforded no warrant in law for the seizure of the cattle. In addition to the recovery of the sum of money above stated, which was actually paid to the county of Routt to satisfy its claim for taxes, the plaintiff, in two other counts, also sought to recover the sum of $10,500 for injuries sustained by the cattle while they were under seizure, and the sum of $500 for expenses which the plaintiff had incurred in securing their return. At the conclusion of a somewhat lengthy opening statement, which was made by the plaintiff's attorney, and before any evidence had been introduced to sustain the allegations of the complaint, the trial judge ruled, in substance, that, upon the facts which had been stated by counsel, there could be no recovery. A verdict was accordingly rendered by the jury in favor of the defendant, pursuant to a peremptory instruction to that effect. The seizure complained of had given rise to considerable litigation in the courts of Colorado, both state and federal, prior to the institution of the present suit. One of the prior suits, in which the

[1] State laws as rules of decision in federal courts, see note to Wilson v. Perrin, 11 C. C. A. 71, and note to Hill v. Hite, 29 C. C. A. 553.

Digitized by Google

Haley Live-Stock Company had brought an action of trespass against the officer who seized the cattle, had eventually gone to the supreme court of the United States, and had been decided by that court adversely to the plaintiff. Vide Wilson v. Haley Live-Stock Co., 153 U. S. 39, 14 Sup. Ct. 768. Certain cases growing out of the same seizure had also found their way to the supreme court of Colorado, and had been decided by that court. Vide Breeze v. Haley, 10 Colo. 5, 13 Pac. 913; Breeze v. Haley, 11 Colo. 351, 18 Pac. 551; Haley v. Elliott, 20 Colo. 379, 38 Pac. 771; Id., 16 Colo. 159, 26 Pac. 559. It was in view of these decisions, doubtless, that the learned judge of the trial court disposed of the case in the summary manner above indicated; being satisfied, no doubt, that, upon the state of facts disclosed by the opening statement, there could be no recovery.

In the case of Wilson v. Haley Live-Stock Co., 153 U. S. 39, 14 Sup. Ct. 768, no final judgment appears to have been entered, nor were the parties to that suit the same as in the case at bar. It may be conceded, therefore, that the plaintiff company is not barred of its right to sue by any of the proceedings taken in that case, and that the action of the trial court cannot be sustained upon that theory. Nevertheless, if it appears from the averments contained in the plaintiff's declaration, aided, as it may be, by the statement of its attorney of the facts which it expected to prove, that no cause of action in fact existed, then no complaint can be made of the summary character of the trial. We accordingly proceed to inquire whether the declaration and oral statement of counsel did disclose a cause of action as against the board of county commissioners of Routt county, the present defendant.

It appears from the allegations of the complaint that the seizure of the cattle which is complained of was made by S. D. Wilson, acting as county treasurer of Routt county, Colo., in the month of July, 1888, and that the seizure was made under a tax warrant, as it is termed, and that this warrant was founded on an assessment roll for the year 1884 which was made by the county assessor. This warrant is alleged to have been void for the following reasons: First, because the assessment roll on which the warrant was founded was not made and returned to the county clerk until after the first Monday in July, 1884, whereas the law (Gen. St. Colo. 1883, § 2856) directed its return on or before June 25th of that year; second, because no notice was published of the meeting of the board of equalization to equalize assessments, as required by law, which could apply to the assessment roll on which the tax warrant was founded, because such assessment roll was not returned in due time to the county clerk; third, because certain interlineations were made in said assessment roll in July, 1887, by the then county treasurer, which interlineations consisted in making the dollar mark ($) before certain figures, and in writing at the head of certain columns of the assessment roll the words, "Dolls.," "Cents"; and, fourth, because the realty embraced in said assessment roll was imperfectly described, the description being as follows: "Six ¼ sections." It should be stated, in this connection,

Digitized by Google

that Haley was assessed in the aggregate, for the year 1884, the sum of $4,248.59, the total value of his property, as shown by the assessment roll, being about $175,100, of which amount property of the value of $3,780 appears to have been realty and the residue personalty. This tax, by the addition of penalties and costs, had grown to be $12,725.50 in the year 1888, when a seizure of property to collect the tax was made. We are unable to ascertain from the allegations of the complaint, supplemented by the oral statement of the plaintiff's attorney, that the validity of the tax warrant is challenged for any other reasons than those last stated.

Each of the grounds thus relied upon to impeach the assessment, and the validity of the warrant under which the alleged wrongful seizure was made, have been considered by the supreme court of Colorado, and have been pronounced insufficient for that purpose. Thus, in Breeze v. Haley, 10 Colo. 5, 3 Pac. 913, a case wherein Haley, the tax debtor, sought to restrain the collection of the very taxes which are involved in the present case, because of alleged defects in the assessment roll, it was held that the failure of the assessor to complete and deliver the assessment roll to the county clerk by June 25, 1884, as directed by section 2856, Gen. St. 1883, did not render the tax invalid, and the court accordingly declined to enjoin its collection. In a later case (Haley v. Elliott, 20 Colo. 379, 38 Pac. 771), wherein Haley seems to have sued in replevin to recover certain property which was sold under the same tax warrant that is involved in this case, all of the above-mentioned defects in the assessment roll and warrant, which are relied upon as a basis for a recovery in the case at bar, were considered at length in two opinions, one of which was delivered on a motion for a rehearing, and the conclusion was announced that none of the alleged defects or irregularities complained of either invalidated the tax or rendered the tax warrant void. The court held, in substance, that the omission of the dollar mark on the assessment roll might be corrected at any time by the county treasurer; that the defective description of the realty was likewise subject to correction at any time; and that, even though uncorrected, it did not affect the validity of the warrant. It was further said, after a review of the various provisions of the revenue laws of the state, that they had been specially framed so as to prevent such objections to the assessment, as were then and now raised, from having the effect of rendering a tax invalid and preventing its prompt collection. While it is true that the defendant cannot avail itself of these decisions to support a plea of res judicata, nevertheless, as these are decisions construing a statute of the state, they are binding upon this court, in so far as they place a construction upon the local statute, and determine the validity of acts done thereunder. Moreover, if they were not thus binding upon the federal courts, we should have little difficulty, we apprehend, in reaching the same result which was reached by the supreme court of the state. Inasmuch, then, as it is settled, by the decisions aforesaid, that the money which the plaintiff seeks to recover was collected

Digitized by Google

under a valid tax warrant, and was thereafter paid over to the county, no ground is disclosed by the record upon which it can be recovered. The Haley Live-Stock Company, to whom Haley attempted to transfer the cattle, according to admissions contained in the present record, did not become a body corporate until some time after the alleged trespass was committed, so that at the time when the cattle were seized they were in fact Haley's property, and subject to be taken for taxes which had been assessed against him. This conclusion was reached by the supreme court of the United States, upon substantially the same state of facts that is disclosed by the present record, in the case of Wilson v. Haley Live-Stock Co., 153 U. S. 39, 45, 14 Sup. Ct. 768. It results from what has been said that no error was committed of which the plaintiff below is entitled to complain, and the judgment of the circuit court is therefore affirmed.

(94 Fed. 303.)

TEXAS & P. RY. CO. v. HARBY et ux.

(Circuit Court of Appeals, Fifth Circuit. May 2, 1899.)

No. 791.

1. RAILROADS—DEATH OF INFANT—INSTRUCTION—CARE IN STOPPING TRAIN.

An instruction, in an action against a railroad for causing the death of an infant, after stating that servants operating a train should use "such care as an ordinarily prudent person would exercise to stop the train in order to prevent injury to the party on the track," was qualified, without coming to a period, by adding: "And in this behalf the care and caution an ordinarily prudent person would use would be to use every power within their ability and means to stop the train, in order that injury might not be inflicted on the person on the track; and if they fail to exercise this care, and to use every power and means consistent with the safety of themselves in their position on the train, and by reason of their failure to exercise such care and caution the person is injured, then they would be liable for any damage sustained or loss occasioned by reason of the injury." *Held* to require a degree of care higher than such as "ordinarily prudent persons would exercise."

2. INSTRUCTIONS—CURE OF ERROR.

An instruction, in an action against a railroad for causing the death of an infant, which states that it is the duty of the engineer to use every means within his ability to stop the train in order that no injury may be inflicted to one on the track, and that a failure to exercise every power and means consistent with the safety of those on the train and engine to stop the train will render them liable in damages, and which is defective as requiring too high a degree of care, is not rendered less misleading or cured by adding that, "In this respect you are charged that a reasonably prudent and cautious person would have used all the efforts in his power and within his means and ability, consistent with the safety of those on the train and engine, to stop the train," and by conversely stating the matter, saying, "If, however, the engineer, after discovering the peril of the child, used all the efforts at his command, consistent with the safety of those on the engine and the train, to stop the train, and avoid the injury," etc., as the charge clearly limits the qualification of the duty to use all means, etc., alone by the terms "consistent with the safety of those on the engine and train."

3. SAME—QUESTION FOR JURY.

Where the evidence showed that the engineer, on a descending grade, did not discover a child on the track until within a train's length of him,

Digitized by Google

when he applied the air brakes, released the sand, and did everything to stop the train, short of reversing the engine, which would result in a wreck, the reiteration of language in the instruction tending to show that in the court's view he should have reversed the engine was erroneous, as it was the duty of the jury to determine from the evidence whether the care of the engineer was such as a prudent man would have used.

In Error to the Circuit Court of the United States for the Northern District of Texas.

This was an action brought by T. H. Harby and his wife, Maggie Harby, against the Texas & Pacific Railway Company, for damages resulting from the death of their infant child, who was run on and killed by a train of the railway company on a bridge across the Colorado river at Colorado City, Tex., on July 16, 1897. The child was 3 years and 11 months of age. The location of the bridge is west and a few hundred yards distant from the station at Colorado City. The train that ran on the child was a freight train, composed of 15 cars loaded with fat cattle, a caboose, and the engine, and was 680 feet long. It was running east, at the rate of about 18 or 20 miles an hour, when it came out of a cut and around a curve to a point from which the engineer could look through the bridge in question, distant from that point about 1,300 feet (the witnesses vary slightly as to the distance). From that point the track is straight to and through the bridge. The bridge was a covered iron bridge, 290 feet long, with trestlework at either end connected with the dump, making the length of the bridge proper and trestlework about 400 feet. The 1,300 feet of straight track immediately west of the bridge over which the train ran just before running on the child is on a down grade 66 feet to the mile towards the bridge. The course of this track is approximately due east and west. The hour when the injury was inflicted was 6 p. m. No one saw the child at the time the injury was received except the engineer and the fireman.

The engineer, called for the defendant, testified: "I was on No. 1 out of Big Springs. It was a stock train,—fifteen cars of fat cattle; and coming to the top of Colorado Hill there is a heavy grade there; and I was coming down the hill at a pretty good rate. I had but a short time to make Lorraine station, beyond Colorado, for the passenger train. Coming to the salt spur, which is perhaps a half or three-quarters of a mile from Colorado, I eased the train up, as I usually do. There is a heavy cut and a sharp curve there, and I always ease the train up so that, as soon as we get out of the cut, we can see the yard. I whistled for the station in the cut. I was getting out of the cut, and saw no train in the yard, and I released my air. The train was then reduced down to twenty miles an hour at that point. After I got out of the cut and onto the straight track about two train lengths [from the bridge the witness doubtless means], I called for signal board. We have a practice of whistling four times for the board, and if the operator has any orders for you he will give you the board. I was watching for the board, and then cast my eye down the track through the bridge. I noticed some object on the track, evidently in the shade of the column of the bridge. At that time the engine was within a train's length of the bridge. Immediately I saw the object move. I put on the emergency air, and called to my fireman, and he helped me open the sand lever. At times it works hard. We opened the sand lever, and both streams of sand were running on the rails. I passed along down, and I could see that the train was slowing up, but it was going at such speed that it was impossible to stop there. * * * After I came out of the curve, it was about a train's length before I applied the air again. I was within about a train's length of the bridge. I didn't notice any object on the bridge until I had moved at least a train length. The train was fifteen cars, engine, and caboose. * * * I did all that mortal man could do to stop that train. I gave it all the air on the train that could be given, and gave it sand. We do not use hand brakes on trains when the air is working. No, sir; I did not reverse the engine. I did not think it would affect it any. The momentum of the train coming down that hill would tear the engine all to pieces, and throw her rods, and endanger the lives of all on the engine. I was just about a train length from the bridge when I first saw the object.

Digitized by Google

I could not have stopped that engine by any means in the world except by wrecking it. The curve (the one coming out of the cut) is about five hundred feet in length. * * * I put on the air the first time on the upper bridge,—the bridge near two miles from Colorado,—so as to slow it down gradually, as I always do. At the salt spur I eased the train down so I could make the spot in the yard in case there was a train there. The air was released when I went on the straight track. Just where I went on the straight track there is a little hill that I can see over, and see the yard. I could see there was no train in the yard, and I released the air. I could not see through the bridge over two train lengths. I have been going through that bridge fourteen years. It is partly of wood and partly of iron. It is a truss bridge. Overhead, the top of the bridge obstructs your view from the board. Nothing obstructs your view from the floor of the bridge after you get onto the straight track. I looked in the yard before I got on the straight track, and I was watching for the operator to give me a signal to pass through without stopping."

The conductor of the train, called for the defendant, testified: "It is something like three or four hundred yards west of the bridge to the curve. It was on the straight track that I felt the air applied. I do not know just how far my caboose was from the curve, but I was on the straight track between the bridge and the curve. The first application of air was before we got into the cut. The caboose brake was set, and the brake on the rear car was set. I did this in order that the engineer would not have to waste his air going down hill. If it became necessary to stop, he would have air enough. This is the heaviest grade from Clyde to Toyah. I have been running over this division nine years. We had fifteen cars, an engine, and a caboose; fifteen stock cars, besides the engine and caboose, all loaded with cattle. Sixteen loads is the capacity of the engine. They hardly ever put over fourteen cars of stock. They do not want fifteen cars if they can get less. That is a full train of stock. I do not know of anything else the engineer could have done to stop the train. I do not know whether he reversed the engine or not. It is my opinion he did not. He could have done so, but it would have been extremely dangerous. An engine often strips itself, and tears up the ties; and it would be extremely dangerous to reverse an engine on a bridge. You cannot get an engineer to do it. On this occasion I do not think the train could have been stopped before it went through the bridge, caboose and all. I do not believe it could have been stopped west of the river."

The fireman testified, in substance, that just before coming to the bridge in question he was down on the deck of the engine, breaking coal; that just as the engine got to the bridge he started to get up on the seat box; that in going into town he always got up on the seat box, and rang the bell going through town; that it was for this purpose that he was going to get on the seat box just as they were starting on the bridge; that, just as he started to get up, he saw the child, and he then helped the engineer to open the sand lever; that the sand lever was opened just before the engine got onto the iron part of the bridge; that the engineer had applied the air just before they got to the bridge.

J. K. Duke, called for the plaintiff, testified in substance: "I am a draftsman, and civil engineer, and trainman. I have been in the motive railway train service. I am familiar with the operation of Westinghouse air brakes. I have had a little over four years' experience as a trainman; three years with the Rock Island, at Ft. Worth. I became familiar with the running of trains. I never run a train; that is the train master's duty,—train dispatcher's. I am familiar with the handling of air brakes or set or hand brakes. I am familiar with the appliances in use on trains to stop them or check their speed. The ordinary means for stopping trains or checking their speed are air brakes and hand brakes. There is no other method that I know of by which the engineer stops his train. Reversing an engine means to reverse the direction in which it is going, and start the wheels back the other way. That is used sometimes, but hardly ever. If you should run into an open bridge, or something of that kind, and it became necessary to stop suddenly, they generally use that means. The method used principally is to apply the brakes and drop sand on the rails. * * * The purpose of dropping sand on the rails is to keep the wheels from slipping. That sand is controlled by the engineer. He has a lever

Digitized by Google

running into the engine by which he can drop sand onto the rails, and then cut it off again. The air brakes are operated by the engineer. He operates the air brakes just as he does his engine. When it is necessary, he puts on air to slow up or stop the train. When he gets slowed up enough, he releases it. I mean the engine man does this. He sets the air, and that sets all the brakes on the train that have air. He can set it at different pressure. He can set readily, and as heavy as he wants to. In an emergency he puts it on with full force, and stops as quick as he can. A train running twenty-five or thirty miles an hour ought to be stopped on an ordinary road in from three to six hundred feet. If the grade was very heavy, it might cut some figure. If it was an incline like Pike's Peak, it could cut considerable figure. If the grade is slight, I should not think it would cut much figure. * * * A train running fifteen miles an hour, equipped with air brakes, the track sanded, and the engine reversed, with fifteen loaded cars, ought to be stopped in a train's length. * * * I am not familiar with the railroad bridge across the Colorado river. I have passed over it. I do not think it would be possible for a train running fifteen miles an hour to run twelve hundred or fifteen hundred feet with the air brakes set and the engine reversed. I do not think it would go that far. That is over a quarter of a mile. In my opinion, a train going fifteen miles an hour, with fifteen loads, equipped with air brakes, ought to be stopped in seven or eight hundred feet. Just a slight grade would not cut much figure. Of course, it would cut some figure; but, if it was a slight grade, it would not cut much. If you had only fifty per cent. of air, it would not make much difference. Some roads, if they have fifty per cent. air, they leave the entire control of the train to the air. A train is not properly equipped unless it has air brakes."

It is not necessary to further quote or summarize the testimony. After the evidence had closed, the defendant requested the court to charge the jury as follows: "The court instructs the jury that the plaintiffs have failed to show a right to recover in this case, and you are instructed to return a verdict for the defendant." This request the court refused, and to this action of the court "the defendant excepted, for the reason that the plaintiffs have not shown that the engineer in charge of the train which hurt the child failed to do everything in his power, consistent with the safety of his train and the crew on it, to stop the train after he saw the child." Whereupon the court charged the jury, among other things, as appears in the assignment of errors, which, as far as it is necessary to notice, is as follows: "First. The court erred in refusing to give the following charge, which was requested by the defendant: 'The court instructs the jury that the plaintiffs have failed to show a right to recover in this case, and you are instructed to return a verdict for the defendant.' Second. The court erred in charging the jury as follows: 'While the railroad company has the right to use this track in the prosecution of its business as a common carrier of freight and passengers, and has a right to move its trains over its track and bridges, yet, at the same time, when anybody is upon the track, either man or child, and such person is in a perilous position, and this perilous position is discovered by the servants of the railway company operating the train, these servants operating the train must use such care and caution as an ordinarily prudent person would exercise to stop the train in order to prevent injury to the party upon the track; and in this behalf the care and caution an ordinarily prudent person would use would be to use every power within their ability and means to stop the train in order that injury might not be inflicted on the person on the track; and if they fail to exercise this care, and to use every power and means consistent with the safety of themselves in their position on the train, and by reason of the failure to exercise such care and caution the person is injured, then they would be liable for any damages sustained or loss occasioned by reason of the injury. In this case you are charged that if the engineer who was operating the engine discovered plaintiffs' child upon the bridge, then it was his duty to use such care to prevent injury to the child as a reasonably prudent and cautious person would have used under similar circumstances; and in this respect you are charged that a reasonably prudent and cautious person would have used all the efforts in his power and within his means and ability, consistent with the safety of those on the train and engine, to stop the train, and avoid injury

Digitized by Google

to the child; and if, knowing of the peril of the child, the engineer failed to use such means to avoid the threatened danger, then he was guilty of negligence directly causing such injury to the child, which resulted in its death, and the defendant company would be liable. If, however, the engineer, after discovering the peril of the child, used all the efforts in his power, and all the means at his command, consistent with the safety of those on the engine and train, to stop the train, and avoid the injury, then the engineer was not guilty of negligence, and your verdict should be for the defendant. You should take into consideration all the evidence introduced in all its phases, and attempt to ascertain from that evidence and surrounding circumstances whether or not the engineer, after discovering the peril of the child, could have, by the use of the means within his power, stopped his engine before inflicting injury on the child. That is the question you are called on to determine from the evidence before you. If you find that he could have stopped the train by the exercise of such care as I have indicated to you, and that he failed to do so, and by reason of his failure and neglect to do so this child was killed, then it would be your duty to find for the plaintiffs; but, if he could not have stopped the train by the exercise of the power and means at his command, it will be your duty to find for defendant.'" To this portion of the charge, when given, the defendant duly excepted "because it is conflicting, and calculated to confuse the jury. It, in one part of it, makes the defendant liable if the perilous position of the child was discovered by the servants of defendant operating the train, and requires of them care and prudence, etc. There is no evidence that any servant but the engineer saw the child, who had any power to in any way control the train. It determines what a prudent man would do under the circumstances, instead of leaving that to the jury. In one part it charges that the engineer should do anything in his power, consistent with the safety of the crew, and does not leave him the right to act with reference to the safety of the train and freight; and, in event the servants were guilty of neglect as defined, they would be liable. In another part of the charge it is made the duty of the engineer to stop the train, if he could do so with the means at his command, without limiting this duty to the safety of the train and crew."

T. J. Freeman and R. L. Stennis, for plaintiff in error.

Before PARDEE, McCORMICK, and SHELBY, Circuit Judges.

McCORMICK, Circuit Judge, after stating the case as above, delivered the opinion of the court.

After hearing the evidence, the court below practically withdrew from the jury all the issues but that of discovered peril, submitting only the question, did the engineer in charge of the engine which hit the child use proper care to prevent injuring it, after he discovered its peril? and the question of damages. The jury found for the plaintiffs the sum of $750. We notice only the second of the errors assigned, because the view we have taken of it renders it necessary to reverse the judgment below, and on another trial the evidence may be materially different. In that portion of the charge given by the court to which the defendant excepted, and on which it has assigned error, the trial judge, in stating the general rule, said:

"When anybody is upon the track, either man or child, and such person is in a perilous position, and this perilous position is discovered by the servants of the railway company operating the train, these servants operating the train must use such care and caution as an ordinarily prudent person would exercise to stop the train in order to prevent injury to the party on the track."

Thus far the rule is stated with sufficient accuracy, but, without coming to a full stop, the trial judge proceeded to qualify it by adding:

Digitized by Google

"And in this behalf the care and caution an ordinarily prudent person would use would be to use every power within their ability and means to stop the train in order that injury might not be inflicted on the person on the track: and if they fail to exercise this care, and to use every power and means consistent with the safety of themselves in their position on the train, and by reason of the failure to exercise such care and caution the person is injured, then they would be liable for any damage sustained or loss occasioned by reason of the injury."

Thus qualified, the rule requires the use of a degree of care much beyond "such as ordinarily prudent persons would exercise," even the utmost care that the most prudent persons would or could use. Such a high decree of care is not and cannot be exacted under such circumstances of corporations or of natural persons, because it could not be met in the operating of the character and amount of machinery used and necessary to be used in railroad transportation. As was said by the circuit court of appeals for the Eighth circuit, we have no question that the trial court had in mind the true rule applicable to the situation, but, unfortunately, the form in which the instruction was given would not convey the proper meaning to a jury composed of men unskilled in legal phraseology. Manufacturing Co. v. Johnson, 32 C. C. A. 309, 89 Fed. 677. The trial court probably had in mind this language, used by the supreme court of Texas in a somewhat similar case:

"If defendant, through the parties in charge of the engine, knew of Breadow's peril in time to have avoided same, such knowledge imposed upon it the new duty of using every means then within its power, consistent with the safety of the engine, to avoid running him down, and a failure so to do would render it liable, notwithstanding he may have been guilty of contributory negligence in being exposed to the peril. This new duty and liability for its breach is imposed, upon principles of humanity and public policy, to prevent what would otherwise be, as far as civil liability is concerned, the licensed destruction of persons negligently exposing themselves to peril." Railway Co. v. Breadow, 90 Tex. 26, 36 S. W. 410.

It is to be considered that the language just quoted is not addressed as an instruction to a jury, but to trial judges and the legal profession. It is to be observed, also, that the using of "every means then within the power of the servants of the defendant" is subject to the qualification embraced in the further language, "consistent with the safety of the engine." In that case it was the running of an engine alone which inflicted the injury, and the words "consistent with the safety of the engine," in their application to this case, are equivalent to the words "consistent with the safety of the train," if these are understood to embrace the engine, the cars, the amount and character of freight, and the persons on the train. The analogous qualification actually given in this case in the statement of the general proposition is, "consistent with the safety of themselves in their position on the train."

The defect which we are attempting to point out was not cured or rendered less misleading and hurtful when the judge came to apply his general proposition to the case the jury were considering. Immediately, in the same brief paragraph, without the interposition of a full stop, the language is repeated:

Digitized by Google

"And in this respect you are charged that a reasonably prudent and cautious person would have used all the efforts in his power and within his means and ability, consistent with the safety of those on the train and engine, to stop the train."

Then, in the next sentence, stating the matter conversely, the judge says:

"If, however, the engineer, after discovering the peril of the child, used all the efforts in his power, and all the means at his command, consistent with the safety of those on the engine and train, to stop the train, and avoid the injury," etc.,

—Still clearly limiting the qualification of the duty to use all the means, etc., alone by the terms, "consistent with the safety of those on the engine and train." Then, further on, in concluding the charge on this subject, the judge said:

"If you find that he could have stopped the train by the exercise of such care as I have indicated to you, and that he failed to do so, and by reason of his failure and neglect to do so this child was killed, then it would be your duty to find for the plaintiffs; but, if he could not have stopped the train by the exercise of the power and means at his command, it will be your duty to find for defendant."

In the opinion of the supreme court of Texas from which we have quoted it is said:

"The principle [of humanity], however, has no application in the absence of actual knowledge on the part of the person inflicting the injury of the peril of the party injured in time to avoid the injury by the use of the means and agencies then at hand. If he had no such knowledge, the new duty was not imposed, though it be clear that by the exercise of reasonable care he might have acquired the same. The burden of proof was upon the plaintiff in this case, in order to recover for a breach of such new duty, to establish, not that the employés might, by the exercise of reasonable care, have acquired such knowledge, but that they actually possessed it."

In this case there is an utter absence of proof that the engineer saw the child until the engine was within a train's length of the bridge, or that the fireman saw it until just as the engine got to the bridge, or that any other servant of the company saw it before it received the fatal injury. There is no evidence tending to show that the brakes and sand were not applied to the utmost as soon as the child's presence on the track was discovered. On the contrary, the proof is all one way, and conclusive, that both of these means were used as promptly and efficiently as was possible. The engine was not reversed. There was no dispute or room for question about what was done and what was not done. The very substance of the issue was, not what was done or what was not done, but whether what was done was the use of such care and caution as an ordinarily prudent person would exercise to stop the train in order to prevent the injury to the party on the track. That is not a question of law, otherwise the trial judge would not have submitted it to the jury. Further than this, there is no proof tending to show that the engineer could have done anything more than he did do, except to reverse his engine. It is doubtless true that a competent engineer in charge of such an engine, pulling such a train, at such a place, and exercising the care and caution of an ordinarily prudent person, would have used every

Digitized by Google

power within his ability and means to stop the train, consistent, in his judgment, with the safety of those on the engine and on the train, and of the train and its freight. From necessity, it was, and must ever be, a question for enlightened judgment in the very emergent time, "What means of those within my reach can I use that are consistent with my own safety," the safety of other persons on the engine and train, and the safety of the train itself and its freight? It is true that the judgment of the jury is the final arbiter, and in particular cases it may be true that the defendant is liable for an error in judgment of its servant engineer. The engineer says that, having in view the grade of the track, the weight of the train, its speed, its proximity to the bridge and to the child on the track, his judgment was that to reverse the engine would not affect the speed of the train or the safety of the child, but that it would tear the engine all to pieces, throw her rods, and endanger the lives of all on the train, and that he could not stop the engine by any means in the world except by wrecking it. It cannot be the law that the defendant or its servants are in duty bound to use means that will cause them to incur such extreme hazards on the barest possibility of being thereby able to prevent running onto a person, even a tender infant, whose presence on the track was not to have been expected, and was not discovered until the case presented the dire alternative of a fatal injury to the child or the most serious injury to the train and those thereon. We are not able to believe that the jury would or could have found as a fact that a competent engineer, using the care and caution of an ordinarily prudent person, would have reversed his engine under the circumstances and conditions shown by the proof; or that, if he had done so, the injury to the child would have been thereby prevented, if they had not been misled by the charge of the court, or by their misunderstanding of his charge, into accepting it as matter of law, binding on their consciences as sworn jurors, to find for the plaintiffs because the engineer did not reverse his engine. The tone of the instructions, and the reiteration of the definition of that care which a person of ordinary prudence would use, seems to us—as we think it must have appeared to the jury—to express that the judge's view of the law was that the engineer should have reversed his engine. We are far from deeming it our duty to limit the sound discretion of the trial judge in using large freedom in discussing the testimony in his charge to the jury. It is both his privilege and his duty to do so. But he should at the same time take care to inform them that his suggestions are not binding on them as matter of law; that, however high may be their regard for his views of the evidence in a case like this, it is their duty, and not his, to determine from all the facts admitted or established by proof whether the care and caution shown to have been used was up to that measure which, in their judgment, a person of competent skill and of ordinary caution and prudence, placed in the engineer's position, would have exercised. For the error in the charge of the court below, the judgment must be reversed, and the case is remanded to the circuit court, with instructions to grant a new trial.

Digitized by Google

(94 Fed. 321.)

GARNER et al. v. TRUMBULL.

(Circuit Court of Appeals, Eighth Circuit. April 3, 1899.)

No. 1,123.

1. RAILROADS—CARE REQUIRED AS TO PERSON ON TRACK.
When, for a considerable period, numerous persons have been accustomed to walk across or along a railroad track between given points, those in charge of passing trains are required to take notice of such fact, and to use reasonable precautions to prevent injury to persons whose probable presence on the track should be anticipated.

2. SAME—INJURY TO CHILD—CONTRIBUTORY NEGLIGENCE OF PARENTS.
Where the father of a child two years of age was absent from home, and the mother had gone to a neighbor's, a short distance away, leaving the child, with older children, at play in the yard, where a neighbor was also at work, and the child escaped, unobserved, and went upon a railroad track some 250 feet from the house, and was run over and killed by a passing train, it cannot be held, as a matter of law, that the parents were guilty of contributory negligence, but the question is one for the jury.

In Error to the Circuit Court of the United States for the District of Colorado.

John A. Gordon (A. P. Anderson, on the brief), for plaintiffs in error.

Tyson S. Dines and E. E. Whitted, for defendant in error.

Before CALDWELL, SANBORN, and THAYER, Circuit Judges.

THAYER, Circuit Judge. This suit was brought by W. A. Garner and Etta Garner, the plaintiffs in error, against Frank Trumbull, as receiver of the Union Pacific, Denver & Gulf Railway Company, the defendant in error, to recover damages on account of the death of their minor child, John C. Garner, who was run over and killed by a train which was being operated at the time for and in behalf of the receiver. The accident occurred in Las Animas county, Colo., about three miles from the city of Trinidad, and between that city and a town called "El Moro." In the immediate vicinity of the place where the accident occurred was a small settlement called "Chilili." The train which ran over the child was a coal train, consisting of a locomotive, seven empty cars, and a caboose. The complaint alleged, in substance, and there was evidence tending to show, that the parents of the child, who was about two years old, lived in a house which was about 256 feet from the track of the Union Pacific, Denver & Gulf Railway Company; that, during the temporary absence of the child's mother (she having gone on an errand to the house of her sister, who lived about a quarter of a mile distant), the child strayed away from home and from the custody of those in whose charge it had been left, and got on the railroad track, where it was run over and killed; that at the place where the accident occurred the track was perfectly straight, so that the child might have been seen from the direction in which the train approached for a distance of over 600 yards, the atmosphere being very clear; and that the track at that place, and for a considerable distance in either direction

Digitized by Google

therefrom, had been used for a long time by the people and villagers, who lived in considerable numbers along the right of way and on both sides thereof, as a footpath for the purpose of going to and from the city of Trinidad, and to and from their work, and to and from each others' houses, either on business or as visitors. At the conclusion of the plaintiffs' evidence, and without the production of any evidence on the part of the defendant, the court directed a verdict in favor of the defendant, which is the error complained of. This instruction was doubtless given on the theory that the child was a trespasser on the track of the railway company; that the engineer of the train, and other train operatives, on that account, owed the child no duty until they saw it; and that they were under no obligation to anticipate its presence on the track, or to be on the lookout either for it or other persons at the place where it was run over and killed. There are some adjudged cases which doubtless support such a view, but we are persuaded that it is not a correct rule, as applied to those portions of a railroad track which many people have been in the habit of using as a footpath for a considerable period, without objection on the part of the railway company, although without any express license to do so. Train operatives ought to be required to take notice of such usages and of conditions which actually exist. and to regulate their actions accordingly. A proper regard for the safety of persons and property intrusted to their charge, and for human life in general, should impel them to do so. When, therefore, for a considerable period, numerous persons have been accustomed to walk across a railroad track or along a railroad track between given points, either for business or pleasure, railroad engineers should take notice of such practice, and, when approaching such places, should be required to exercise reasonable precautions to prevent injuring them. Knowing the usage which prevails, they may reasonably be required to anticipate the probable presence of persons on or near the track at such places, and to be on the lookout when their attention is not directed to the performance of their other duties. The natural impulses of a person who has a proper regard for the welfare of others would prompt him to thus act. In the case of Gulf, C. & S. F. R. Co. v. Washington, 4 U. S. App. 121, 127, 129, 1 C. C. A. 286, and 49 Fed. 347, this court applied the same doctrine, in substance, to a case where stock had been killed on a railroad track; holding that in a country where great numbers of cattle ran at large, and the owners thereof were not bound to fence them in, nor railway companies to fence their tracks, railroad engineers were required to take notice of existing conditions, and exercise ordinary care to discover stock which might be on the track, and that they were justly chargeable with negligence for failing to do so. This rule is enforced in the state of Colorado; that is to say, it is held that when cattle are allowed to roam at large, and railroads do not fence their tracks, railroad engineers are bound to anticipate that cattle may stray on the track, and to keep a lookout for stock, and that railroad companies may be held liable to the owners of stock for a failure to exercise ordinary care in this respect. Railway Co. v. Henderson, 10 Colo. 1, 13 Pac. 910; Railway Co. v. Patterson, 4

Digitized by Google

Colo. App. 575, 577, 36 Pac. 913. In Cahill v. Railway Co., 46 U. S. App. 85–89, 20 C. C. A. 186, and 74 Fed. 287, the court said "that in places on railroad tracks where people are accustomed to come and go frequently in considerable numbers, and where, by reason of such custom, their presence upon the track is probable and ought to be anticipated, those in charge of passing trains must use reasonable precautions to avoid injury, even to those who, in a strict sense, might be called trespassers." And in the case of Felton v. Aubrey, 43 U. S. App. 278–296, 20 C. C. A. 445, and 74 Fed. 359, the court of appeals for the Sixth circuit said that if a railroad company "has permitted the public for a long period of time habitually and openly to cross its track at a particular place, or use the track as a pathway between particular localities, it cannot say that it was not bound to anticipate the presence of such persons on its track, and was therefore not under obligation to operate its trains with any regard to the safety of those there by its license." In other jurisdictions the principle has also been enunciated that where a practice has become common of crossing a railroad track at a certain place, or using it as a pathway between certain localities, and such practice has grown up with the implied sanction of the railroad company, a duty is imposed upon its trainmen to anticipate the probable presence of pedestrians at such places, and to exercise ordinary care to avoid running them down. Taylor v. Canal Co., 113 Pa. St. 162–175, 8 Atl. 43; Barry v. Railroad Co., 92 N. Y. 289–292; Roth v. Depot Co., 13 Wash. 525, 43 Pac. 641, and 44 Pac. 253, and cases there cited; Frick v. Railway Co., 75 Mo. 595, 610; Le May v. Railway Co., 105 Mo. 361, 16 S. W. 1049.

In view of the testimony tending to show the extent to which the track at the place where the accident occurred had been used by the public, and the length of time such use had continued, we think it was the province of the jury to decide whether such use had not been of such long standing and of such a nature as to impose on train operatives, on approaching that locality, the duty of anticipating the probable presence of persons on or near the track, and of exercising ordinary watchfulness to avoid injuring them. And, on the assumption that the jury would have found that the engineer or fireman was under an obligation to keep a lookout for persons who might be on or near the track, we are also of opinion that the testimony concerning the distance at which the child might have been seen before it was run over (one witness, who had measured the distance, saying that it could have been seen for 2,300 feet) rendered it necessary for the jury to determine whether the engineer and fireman did in fact exercise ordinary care to discover the child.

It is suggested in behalf of the defendant in error that the instruction given by the trial court may be sustained on the ground that the parents of the child were guilty of such contributory negligence as precludes a recovery, but we are of opinion that this proposition is untenable. The evidence showed that the child's father was absent from home on the day of the accident; that the mother, as before stated, had gone on an errand to her sister's house, a short distance away; that the child, in company with its three broth-

Digitized by Google

ers and sisters, the eldest of whom was a girl eight years old, was left playing in the front yard of the parents' house; and that a neighbor of the family, a full-grown man, was at work in the same yard where the children were at play. The child seems to have escaped, unobserved, and gone on the railroad track, some 256 feet from the house. On this state of facts, we are unwilling to say, as a matter of law, considering the station in life which these plaintiffs appear to have occupied, that they were guilty of contributory negligence. We think that this issue, like the others, was properly one for the jury. The judgment of the circuit court is therefore reversed, and the case is remanded for a new trial.

(94 Fed. 329.)

WESTERN COAL & MINING CO. v. BERBERICH.

(Circuit Court of Appeals, Eighth Circuit. April 10, 1899.)

No. 1,094.

1. REVIEW—CONFLICTING EVIDENCE.
   The court will not review the verdict of a jury where there is some evidence to sustain it, although it may be against the apparent weight of evidence.
2. SAME—OPINION EVIDENCE—SUFFICIENCY OF OBJECTION.
   An objection to the opinion of a witness as irrelevant and incompetent is too general and indefinite.
3. EXPERT TESTIMONY—HYPOTHETICAL QUESTION.
   Where a question asked an expert witness is framed on the assumption of certain facts, counsel may assume the facts in accordance with his theory of them.
4. SAME.
   An expert may be asked a question involving a point to be decided by the jury.
5. TRIAL—REQUESTS TO CHARGE.
   Where the charge in chief was a clear and accurate statement of the law, covering every aspect of the case, it was proper to refuse special requests.
6. SAME—SINGLING OUT PARTICULAR EVIDENCE.
   The court properly refused requests to charge that singled out and gave undue prominence to particular items of evidence.
7. DUTY OF MASTER—OPERATION OF MINES.
   It is the duty of a master operating a mine to use all appliances readily attainable, known to science, for the prevention of accidents arising from the accumulation of gas or other explosive substances.

In Error to the Circuit Court of the United States for the Western District of Arkansas.

This action was brought by Joseph Berberich, plaintiff below, against the Western Coal & Mining Company, defendant below, to recover damages for personal injuries sustained by the plaintiff, while working for the defendant as a coal miner in its coal mine, by reason of an explosion of gas in the mine. The cause of action is thus stated in the complaint: "That prior to the 18th day of December, 1893, defendant employed and engaged plaintiff to work in said coal mine of defendant at Denning, Franklin county, Arkansas, as a miner to dig and mine coal; that by reason of said employment plaintiff was by defendant required to go down in said mine a great distance in the earth, and plaintiff says that, by reason of defendant's so employing him to work in

Digitized by Google

said mines as aforesaid, it then and there became and was the duty of defendant to furnish plaintiff a reasonably safe place to work in said mine as said miner; yet plaintiff says that defendant wholly disregarded its duty towards plaintiff in that behalf, and that on the said 18th day of December, 1893, while plaintiff was engaged at work for defendant as such miner in one of the rooms of said mine at Denning, Arkansas, the defendant, by and through its agents and servants, so carelessly, negligently, and wrongfully conducted and managed said room in said mine, in this, that defendant failed to provide a sufficient amount of fresh air in said mine and room to keep them free from gas, fire damp, or other combustible matter unknown to plaintiff, and by reason of his failure aforesaid allowed the same to accumulate in said room and mine, which the defendant then well knew, or by the exercise of ordinary care and diligence, on the part of defendants and its agents, should have known; and that on the said 18th day of December, 1893, without any fault or negligence on plaintiff's part whatever, the said gases, fire damp, and combustible matter exploded, and by reason of said explosion plaintiff was burned, wounded, crippled, disfigured, and maimed for life."

The defendant denied the negligence, alleged the accident was caused by the negligence of the plaintiff's fellow servants, and that the plaintiff was guilty of contributory negligence. There was a trial before a jury, and a verdict and judgment for the plaintiff, and the defendant sued out this writ of error. The following are some of the leading facts which the testimony tended to establish: Four or five days before the explosion occurred, a rock 15 to 18 feet long, 2 feet wide, and 18 inches deep in the middle, tapering to a feather edge, fell from the roof of the room in which the plaintiff and one Noll were working, leaving what miners call a "horseback." The fall of this rock was followed by a sudden flow of gas into the room, on account of which the pit boss gave orders not to work in the room on that and the following day. The third day after the explosion the pit boss examined the room, said there was gas in it, and gave them Davy or safety lamps to work with, which they used that day and the next. The next day was Sunday, and they did not work. About 7 o'clock on Monday morning the plaintiff and Noll, and Brown, the pit boss, met at the mine. Brown went into the room, examined it, and then called the plaintiff and Noll in and told them there was no danger, and to go to work with the miners' common open lamps, but to keep their lamps down, and not carry them on their hats. They went to work as directed, and worked until 3 o'clock in the afternoon, when a lump of coal which they had wedged off of the roof of the room fell to the floor, carrying with it a piece of slate two or three feet square and half an inch thick, and immediately the explosion of gas occurred. The main controversy between the parties was over the question whether the explosion was the result of a sudden rush of gas released by the removal of the lump of coal and slate from the roof, or whether it was produced by the sudden agitation of the gas already in the room by the falling of the coal and slate, or from the increased volume of gas resulting from its gradual or normal increase owing to the defective ventilation of the room resulting from the negligence of the defendant or its pit or fire boss.

The court gave the following instructions at the defendant's request: "If the jury believe from the evidence that the defendant's fire boss inspected plaintiff's room on the morning of the day plaintiff was injured, before plaintiff went to work therein, and the fire boss told plaintiff the room was safe, but to work with his lamp on the ground; that plaintiff entered the room about 7 o'clock in the morning, and continued to work therein without accident or injury up to about 3 o'clock in the afternoon; that the quantity of air circulating through plaintiff's room was the same from the time he began work until the time of the explosion; and that while working in that room, at about the hour of 3 o'clock in the afternoon, wedging the top coal, a piece of rock or slate fell, and that the falling of this rock exposed the gas feeders, and that instantly upon the fall of this rock the explosion took place,—then, under this state of facts, no such negligence as is charged in plaintiff's complaint is shown as entitles plaintiff to recover, provided you also find that the gas which exploded was gas coming from this feeder, or that whatever gas was in the room or working place would not have exploded except for the gas coming from the feeder. If the jury believes from the evidence that the

Digitized by Google

explosion causing the injury for which plaintiff sues was produced by the unexpected developing and exposure of the gas, or the sudden outburst of gas caused by the fall of rock or slate from the roof of the room in which plaintiff was at work, then such explosion was an accident for which defendant is not liable, and the jury should find a verdict for the defendant. The law does not impose on the defendant company the duty and burden of insuring absolutely its employés against casualties and injuries, for there are certain dangers incident to, and inseparable from, the nature of such work, known to exist, or to be ordinarily attendant thereon, the risk of which the employé takes upon himself, and for which risk the law presumes he receives sufficient compensation from the wages paid him. For instance, if, in such a mine, there should be a sudden or unforeseen uncovering of a gas fissure, or feeder (as called by the miners), or, if there should be ever present in such a mine a certain per centum of fire damp or gas, which no reasonable foresight or exertion of the company can discover or prevent, and there should be more or less exposure to casualties on account of such incident, it would be of the risks assumed by the employés."

Ira D. Oglesby, for plaintiff in error.

Sam R. Chew (Henry L. Fitzhugh, on brief), for defendant in error.

Before CALDWELL, SANBORN, and THAYER, Circuit Judges.

CALDWELL, Circuit Judge (after stating the facts as above). At the close of the testimony the defendant preferred a request for a peremptory instruction to the jury to return a verdict for the defendant, upon the ground that the testimony was not sufficient to warrant a verdict for the plaintiff. The court refused to give the instruction, and this ruling is the first assignment, and apparently the one chiefly relied on, as some 60 pages in the brief of 73 pages are taken up with its discussion. The testimony as to the facts was voluminous and conflicting, and the opinions of the experts, as commonly happens, supported the contention of the party calling them. There is no ground for the contention that there was no evidence to support the verdict, at most it could only be claimed that the verdict was against the apparent weight of the evidence; but that gives this court no warrant to meddle with the verdict of the jury. To do so would be an invasion of the province of the jury, and a practical denial of the right of trial by jury. It was the exclusive province of the jury to pass on the credibility of the witnesses, and, after rejecting the testimony of those whom they discredited, the great preponderance of the evidence may have been with the plaintiff.

David Allister, an old and expert miner, who had filled the position of fire boss in mines, and was familiar with the gas that accumulates in mines, and the causes of its accumulation, the dangers resulting from it, and the proper means of expelling it, and who was evidently familiar with the facts of the case and the contentions of the respective parties, was asked this question by the plaintiff:

"Take the character of room that we have spoken of,—that is, fifty feet back from the side entry, where a man is to enter and work towards the face of the working place, getting out the coal, and a horseback should fall out, say, 15 feet to 18 feet long diagonally across the room, that would be anywhere from 16 to 18 inches deep and 15 to 18 feet long across the room, left in that condition, and the fire boss came into the room in the morning, say, about 7 o'clock, with a safety lamp, and should discover some gas in that room or

Digitized by Google

horseback, and he should inform [—] that [there] were to work there that they might go to work with their lamps down; then whether or not that would be an ordinary safe place to work."

To which question counsel for the defendant objected "because irrelevant and incompetent, and because the fact whether or not the room was a safe place to work was a question of fact for the jury, and not a matter of opinion for the witness, and because there is no proof upon which to base such hypothetical question, and the hypothetical question does not state the facts testified to in the case." The objection was overruled, and this ruling is assigned for error.

The question seems to be imperfectly reported. We will assume the record contains the substance of it. The question was probably not framed with as much nicety and precision as it might have been, but it is also true that no two lawyers would have framed the question in the same language; and, if the form of such questions is to be subjected to hypercriticism, very few of them will survive the test. If every slight defect or slip which a microscopic eye can detect in a question or answer or the charge of the court is to be counted prejudicial error, litigation will become interminable over subtle refinements and quibbles which were not seen or regarded by the judge or jury at the trial, and which had no bearing whatever on the decision of the case on its merits. Such an administration of the law would be intolerable. "But there is nothing," said Judge (now Mr. Justice) Brown, of the supreme court of the United States, "which tends to belittle the authority of the courts or to impair the confidence of the public in the certainty of justice as much as the habit of reversing cases for slight errors in admitting testimony, or trifling slips in the charge. * * * Better by far the practice of the English courts and the federal supreme court, where every intendment is made in favor of the action of the lower court, and cases are rarely reversed except for errors going to the very merits,—errors which usually obviate the necessity of a second trial." Report American Bar Association, 1889, p. ——. Though these remarks of the learned justice were not uttered from the bench, they express the rule upon the subject by which appellate courts should be guided, and they have our approval. There was a map of the room in the mine in which the accident occurred and of the adjacent rooms, which was before the witness, and he had heard the testimony tending to support the theories of the respective parties, and it was upon the supposition that the facts were as plaintiff claimed them to be that the witness' opinion was based. It is, in substance, the same question which the defendant propounded to its expert witness, by which it sought to and did elicit answers the very reverse of the answers given by the plaintiff's witness.

It was not objected at the trial, and it is not claimed here, that the witness was not qualified to testify as an expert, and it was not claimed in argument or in the brief that the facts of the case were not such as to make expert, or more properly opinion, testimony admissible. Indeed, it is expressly stated in the brief of the counsel for plaintiff in error:

Digitized by Google

"Had counsel put the questions in proper form, and embodied in them all the material facts testified to by the witnesses, they might have been asked to give their opinion as to the cause of the explosion."

But the form of the question will stand the test against any of the objections brought against it at the trial, which are all that can be considered by this court. It was objected to (1) "because irrelevant and incompetent," which is too general and indefinite to be dignified with the title of an exception (Insurance Co. v. Miller, 19 U. S. App. 588, 8 C. C. A. 612, 614, and 60 Fed. 254; Railway Co. v. Hall, 32 U. S. App. 60, 14 C. C. A. 153, and 66 Fed. 868); (2) "because the fact whether or not the room was a safe place to work was a question of fact for the jury, and not a matter of opinion for a witness;" as we have seen, this objection was properly abandoned on the argument and in the brief, and if it had been insisted on it would have been of no avail (Rog. Exp. Test. § 120; Railway Co. v. Edwards, 49 U. S. App. 52, 24 C. C. A. 300, and 78 Fed. 745); (3) "because there was no proof upon which to base such hypothetical question," but there was, as shown by the record, a large volume of proof upon the subject; and (4) "that the hypothetical question does not state the facts testified to in the case," but the law does not require that it should. The testimony of a witness who testifies to opinions is founded either on personal knowledge of the facts, or else is based on facts shown by the testimony of others, or on a hypothesis specially framed on certain facts assumed to be proved for the purpose of the inquiry. Where the opinion of the witness is based on facts testified to by others, it is not necessary that he should have heard all the evidence. It is sufficient if it appears he has heard all the testimony which is material to the subject of the inquiry. And when the question is framed on the assumption of certain facts, counsel may assume the facts in accordance with his theory of them. It is not essential that he should state the facts as they actually exist. Rog. Exp. Test. §§ 24, 27, and cases cited. And it is no objection that an expert is asked a question involving the point to be decided by the jury. Transportation Line v. Hope, 95 U. S. 297; Railroad Co. v. Meyers, 24 U. S. App. 295, 11 C. C. A. 439, 442, and 63 Fed. 793.

The defendant preferred several requests for charges which were rightly refused, for two reasons: First, the charge in chief was a remarkably clear, logical, and accurate statement of the law of the case, and was comprehensive enough to cover every aspect of the case, under the evidence; and, second, the special requests singled out particular items of the testimony to the exclusion of all other evidence in the case, which the jury were bound to consider in forming their verdict. The practice of giving undue prominence to isolated facts in the case by singling them out and making them the subject of special instruction is vicious, and has been repeatedly condemned by the supreme court. Smith v. Condry, 1 How. 28, 36; Railway Co. v. Ives, 144 U. S. 408, 433, 12 Sup. Ct. 679. It gives undue prominence to the facts thus singled out, and tends to minimize and disparage other facts of equal or greater importance, and unnecessarily burdens the jury with instructions which tend to con-

Digitized by Google

fuse and mislead them. Where the charge in chief comprehends all the facts the jury can rightfully consider in making up their verdict, all special requests to charge as to the legal effect of isolated facts ought to be rejected.

It is assigned for error that the court in the course of its charge told the jury:

"It was the duty of the defendant to use all appliances readily attainable, known to science, for the prevention of accidents arising from the accumulation of gas or other explosive substances in its mines."

In the case of Mather v. Rillston, 156 U. S. 391, 15 Sup. Ct. 464, which was an action to recover damages for personal injuries resulting from the explosion of powder and caps in an iron mine, the court discusses at length the duty of mine owners to their employés, and laid down the following rule:

"Occupations, however important, which cannot be conducted without necessary danger to life, body, or limb, should not be prosecuted at all without all reasonable precautions against such dangers afforded by science. The necessary danger attending them should operate as a prohibition to their pursuit without such safeguards. Indeed, we think it may be laid down as a legal principle that in all occupations which are attended with great and unusual danger there must be used all appliances readily attainable, known to science, for the prevention of accidents, and that the neglect to provide such readily attainable appliances will be regarded as proof of culpable negligence."

It will be observed that the clause of the court's charge excepted to is "laid down as a legal principle" by the supreme court. The charge is not that the defendant must use "all appliances attainable," etc., but all appliances "readily attainable." This is imposing a very reasonable burden, for "readily," according to the dictionaries that are accepted authority, means "quickly, speedily, easily [Century Dictionary]; at hand, immediately available, convenient, handy [Standard Dictionary]." In effect, the contention of the plaintiff in error is that the court should have charged the converse, and told the jury that in occupations attended with great and unusual danger there is no obligation resting on the employer to use the appliances known to science for the prevention of accidents, although they are readily and easily attainable and immediately available, convenient, and handy. The law has not yet reached that degree of barbarity. The case of Pacific Co. v. Seley, 152 U. S. 145, 14 Sup. Ct. 530, does not conflict at all with the later case of Mather v. Rillston, supra. The former related to an "unblocked frog" on a railroad track, into which the deceased voluntarily placed his foot twice, after being admonished of the danger. "Unblocked frogs" are open and visible, and the danger connected with them known and avoidable by employés and all others. In the case of coal mines, employés can very often neither see nor detect the danger they are exposed to, and their safety is absolutely dependent on the intelligent and constant use of methods and appliances more or less scientific, over which they have no control. There would seem to be room, therefore, for a well-grounded distinction between an "unblocked frog" on a railroad track and a coal mine. But if there is not, and the opinions in the two cases conflict, the doctrine of Mather v. Rillston, being the later

Digitized by Google

case, must prevail. This court has approved the rule in Mining Co. v. Ingraham, 36 U. S. App. 1, 17 C. C. A. 71, and 70 Fed. 219, and in principle applied it in Railway Co. v. Jarvi, 10 U. S. App. 439, 3 C. C. A. 433, and 53 Fed. 65, and its soundness is no longer open to question. There are other assignments, but such as do not fall within the reasoning of those we have decided are not of any general importance, and have no merit. They have all been carefully examined. The judgment of the circuit court is affirmed.

(94 Fed. 335.)

NATIONAL LOAN & INVESTMENT CO. v. ROCKLAND CO.

(Circuit Court of Appeals, Eighth Circuit. April 17, 1899.)

No. 1,128.

1. PROMISSORY NOTES OF CORPORATIONS—POWER TO EXECUTE — PRESUMPTION FROM SIGNATURES OF OFFICERS.

   A private trading corporation has the implied power to issue promissory notes, and one who purchases notes executed in behalf of such a corporation, and signed by its officers, may rely on the presumption that such officers have discharged their duty, and have not exceeded their authority in executing them.

2. REVIEW—ESTOPPEL OF PARTY TO ALLEGE ERROR—FINDING OF REFEREE.

   A party cannot assign as error a finding of a judge or referee made at his request.

3. CORPORATIONS—COMPENSATION OF OFFICERS FOR PAST SERVICES—POWER OF DIRECTORS TO FIX.

   Officers of a corporation, who are also directors, and who, without any agreement, express or implied, with the corporation or its owners, or their representatives, have voluntarily rendered their services, can recover no back pay or compensation therefor; and it is beyond the powers of the board of directors, after such services are rendered, to pay for them out of the funds of the corporation, or to create a debt of the corporation on account of them; but such officers, who have rendered their services under an agreement, either express or implied, with the corporation, its owners or representatives, that they shall receive reasonable but indefinite compensation therefor, may recover as much as their services are worth, and it is not beyond the powers of the board of directors to fix and pay reasonable salaries to them after they have discharged the duties of their offices.

4. SAME—NOTE GIVEN FOR SALARY OF OFFICER.

   Where, after the organization of a corporation, it was agreed and understood at an informal meeting of all the stockholders that the officers should be paid a reasonable compensation for their services, and by a by-law the board of directors was given power to fix the compensation of officers, their subsequent action in voting the president a reasonable salary for past services was legal, and a note of the corporation executed to him therefor was not without consideration.

In Error to the Circuit Court of the United States for the District of Minnesota.

George D. Emery (Charles A. Willard, on the brief), for plaintiff in error.

M. H. Boutelle (N. H. Chase, on the brief), for defendant in error.

Before CALDWELL, SANBORN, and THAYER, Circuit Judges.

Digitized by Google

SANBORN, Circuit Judge. This is an action on a promissory note for $3,747.64, dated October 1, 1896, signed, "The National Loan and Investment Company, by S. P. Howard, Vice Pres., A. B. Hush, Sec. and Treas.," payable to the order of Henry S. Jenkins, and indorsed by him to the defendant in error, the Rockland Company, a corporation, which brought the action and alleged these facts. The National Loan & Investment Company, the plaintiff in error, is a corporation; and it answered the complaint of the Rockland Company that it never made the note, and that it was without consideration and void. A jury was waived, and the case was tried by a referee, who made a special finding of the facts and of his conclusions of law. Exceptions were filed to these findings and conclusions, but they were overruled, and a judgment was rendered against the plaintiff in error for the amount of the note and interest.

It is assigned as error that the referee admitted in evidence the note in suit, and other notes of which this was the last renewal, over the objections of the investment company that they were incompetent, that no authority had been shown for either of the officers to execute them, and that no consideration for them had been proved. But the notes themselves were prima facie evidence of a valuable consideration. They recited that they were made for value received. When these objections were made, the defendant in error had proved that these notes bore the genuine signatures of the vice president and treasurer of the corporation, that the payee named in them was its president, and that the investment company was incorporated by the terms of its articles to buy, own, sell, and deal in all kinds of property, and to do any lawful business necessary or expedient for this purpose. A private trading corporation has the implied power to issue promissory notes. The signatures of its officers thereon are presumptive evidence of their authority to make negotiable paper on its behalf. The acts of the officers of corporations, within the scope of their powers, are prima facie evidence of the acts requisite to give them the necessary authority. One who purchases the notes of a corporation may rely upon the presumption that its officers have discharged their duty, and have not exceeded their authority in executing them, and the law will not deprive him of this presumption when he presents them to the courts. Merchants' Nat. Bank of Gardiner v. Citizens' Gaslight Co., 159 Mass. 505, 507, 508, 34 N. E. 1083; City of Lincoln v. Sun Vapor Street-Light Co., 8 C. C. A. 253, 257, 59 Fed. 756, 760, and 19 U. S. App. 431, 438; Thomp. Corp. §§ 5730, 5741.

Another error alleged is that, in the absence of any evidence in support of such a finding, the referee found the facts set forth in the second paragraph below, which we quote from his report, and the court overruled an exception to that finding.

"(1) That the incorporators of said defendant, the National Loan & Investment Company, were Valentine G. Hush, Henry S. Jenkins, Alfred B. Hush, and Stephen B. Howard, and that, at the time of the agreement or understanding next hereinafter referred to, said incorporators owned the entire capital stock of said corporation. (2) That subsequent to the organization of said corporation, and at or about the time of the commencement of its corporate business, an informal meeting of said incorporators was held, whereat

Digitized by Google

all of said incorporators were present, and whereat it was understood and agreed by and between all thereof that the officers of said corporation should receive from said corporation reasonable compensation for the services performed by them as such officers; and said agreement was not spread on the corporate records, save and excepting as it may appear to have been contemplated in the by-law next referred to. That no resolution was adopted, either by the incorporators or board of directors, fixing the amount of the salaries of the officers in advance."

An examination of the record, however, discloses the fact that the defendant in error cannot be permitted to urge this objection. Its counsel expressly requested the referee to make this finding. Parties cannot avail themselves of errors which they have themselves committed, or which they have induced the referee or judge who tried their case to make. Walton v. Railway Co., 6 C. C. A. 223, 225, 56 Fed. 1006, 1008; Chase v. Driver, 92 Fed. 780;[1] Long v. Fox, 100 Ill. 43, 50; Nitche v. Earle, 117 Ind. 270, 275, 19 N. E. 749; Dunning v. West, 66 Ill. 366, 367; Noble v. Blount, 77 Mo. 235; Holmes v. Braidwood, 82 Mo. 610, 617; Price v. Town of Breckenridge, 92 Mo. 378, 387, 5 S. W. 20; Fairbanks v. Long, 91 Mo. 628, 633, 4 S. W. 499.

It is contended that the facts found by the referee do not warrant his conclusion of law that the defendant in error was entitled to a judgment upon the note. The position here urged is that the note was given for back pay voted to the president of the corporation by the board of directors of which he was a member, that this was an attempt to create a debt of the company by a mere vote of the board without any consideration, and that this act was beyond the powers of the directors and void. The directors of a corporation are trustees for its stockholders. They represent and act for the owners of its stock. Ordinarily the employment of a servant by a corporation raises the implication of a contract to pay fair wages or a reasonable salary for the service rendered, because it is the custom to pay such compensation, and men rarely sacrifice their time and expend their labor or their money in the service of others without reward. Directors of corporations, however, usually serve without wages or salary. They are generally financially interested in the success of the corporation they represent, and their service as directors secures its reward in the benefit which it confers upon the stock which they own. In other words, the custom is to pay the ordinary employés of corporations for the services they render, but it is the custom of directors of corporations to serve gratuitously, without compensation or the expectation of it. The presumption of law follows the custom. From the employment of an ordinary servant, the law implies a contract to pay him. From the service of a director, the implication is that he serves gratuitously. The latter presumption prevails, in the absence of an understanding or an agreement to the contrary, when directors are discharging the duties of other offices of the corporation to which they are chosen by the directory, such as those of president, secretary, and treasurer. Moreover, as the members of boards of directors act in a fiduciary

[1] 34 C. C. A. 668.

Digitized by Google

capacity, they are without the power or authority to dispose of the property of the corporation without consideration. Consequently they may not lawfully vote back pay to an officer who has been serving the corporation voluntarily without any agreement that he shall receive any reward for the discharge of his duties. It is beyond their powers to create a debt of the corporation by their mere vote or resolution. Some authorities have gone so far as to hold that officers of a corporation, who are also its directors, cannot recover for the discharge of their duties unless their compensation is fixed by a by-law or by a resolution of the board before their services are rendered. Gridley v. Railway Co., 71 Ill. 200, 203; Kilpatrick v. Bridge Co., 49 Pa. St. 118, 121; Wood v. Manufacturing Co., 23 Or. 23, 25, 23 Pac. 848. The fact is, however, that, in the active and actual business transactions of the world, many officers of corporations, who are also members of their boards of directors, spend their time and their energies for years in the interest of their corporations, and greatly benefit the owners of their stock, under agreements that they shall have just, but indefinite, compensation for their services. We are unwilling to hold that such officers should be deprived of all compensation because the amounts of their salaries were not definitely fixed before they entered upon the discharge of their duties. A thoughtful and deliberate consideration of this entire question, and an extended consideration of the authorities upon it, has led to the conclusion that this is the true rule: Officers of a corporation, who are also directors, and who, without any agreement, express or implied, with the corporation or its owners, or their representatives, have voluntarily rendered their services, can recover no back pay or compensation therefor; and it is beyond the powers of the board of directors, after such services are rendered, to pay for them out of the funds of the corporation, or to create a debt of the corporation on account of them. Jones v. Morrison, 31 Minn. 140, 147, 16 N. W. 854; Blue v. Bank, 145 Ind. 518, 522, 43 N. E. 655; Doe v. Transportation Co., 78 Fed. 62, 67; Association v. Stonemetz, 29 Pa. St. 534; Railroad Co. v. Ketchum, 27 Conn. 170; Road Co. v. Branegan, 40 Ind. 361, 364. But such officers, who have rendered their services under an agreement, either express or implied, with the corporation, its owners or representatives, that they shall receive reasonable, but indefinite, compensation therefor, may recover as much as their services are worth; and it is not beyond the powers of the board of directors to fix and pay reasonable salaries to them after they have discharged the duties of their offices. Missouri River Co. v. Richards, 8 Kan. 76, 81; Rogers v. Railway Co., 22 Minn. 25, 27; Railroad Co. v. Tiernan (Kan. Sup.) 15 Pac. 544, 553; Stewart v. Railroad Co., 41 Fed. 736, 739; Rosborough v. Canal Co., 22 Cal. 557, 562.

This rule is well illustrated in the two cases from Minnesota which we have cited. In Jones v. Morrison, 31 Minn. 140, 147, 16 N. W. 854, the board of directors voted $39,375 back pay to the president of the corporation, who had served as such under a previous understanding that he should receive nothing for his services, and $7,200 to the vice president, who had served for a stipulated salary,

Digitized by Google

which had been paid. The supreme court of Minnesota held that this act of the board was ultra vires, and that the notes of the corporation issued in pursuance of it were void. On the other hand, in Rogers v. Railway Co., 22 Minn. 25, 27, that court held that a member of the board of directors of the railway company, who had been chosen by the board, and who had served as secretary under a by-law which authorized the directors to fix the compensation of the officers, and under an implied agreement with the corporation that he should receive a fair salary for his services, was entitled to recover as much as he had earned, although the amount of his compensation had never been fixed or allowed by the board, either before or after he rendered his services.

Under the rule which we have announced, and thus illustrated, the objection of the plaintiff in error to the conclusion of the referee and the judgment of the court in the case in hand cannot be sustained. These essential facts were found by the referee: The defendant in error was incorporated on September 24, 1886. At the time of the commencement of its corporate business, but after its organization, all its incorporators, and all the persons interested in it, understood and agreed with Henry S. Jenkins, who was chosen its president, that all the officers of the corporation should receive from it reasonable compensation for the services which they performed, and a by-law of the corporation was adopted by its stockholders at the time of its organization to the effect that the board of directors should fix the salaries of all the officers of the corporation. Jenkins served as president from October 14, 1886, until after the year 1892. On October 30, 1890, he presented to the board of directors a claim for $600 per annum for his services as president from September 1, 1887, to September 1, 1890; and his claim was allowed by the board, and regularly entered upon the books of the corporation. On May 18, 1892, he presented a claim for $600 for his services as president from September 1, 1890, to September 1, 1891; and this claim was allowed by the board of directors at their annual meeting on that day, and was duly entered on the books of the corporation. At the times when these claims were allowed, there was an oral agreement between Jenkins and the board that they should draw the current bank rate of interest, which was then 8 per cent. per annum, until they were paid. On October 2, 1893, the investment company made a promissory note for the amount due upon these claims, payable one year from that date, with interest at 8 per cent. per annum, and delivered it to Jenkins. The note in suit is the last renewal of the note thus made. At the times when the claims of Jenkins were allowed, Jenkins, Hush, and Howard were the members of the board of directors, and the claims were unanimously allowed; so that the vote of Jenkins was unnecessary to pass them, and his presence was not necessary to form a quorum of the board. The corporation had no creditors, and owed no debts. The directors owned a majority of the stock of the corporation. Some of this stock had been pledged, but the pledgees had not caused it to be transferred to their names, and were not entitled to vote it. No objection was ever made by the corporation,

Digitized by Google

or by any one in its behalf, to the acts of the directors in allowing the claims of Jenkins, until this action was brought, in 1897; and all the acts of the directors were done in good faith, and without fraud. The defendant in error was the owner of the note in suit when this action was brought. In this state of the facts, the note cannot be said to be without consideration, nor can the acts of the board of directors be justly held to have been beyond their powers or void. The stockholders expressly empowered the board of directors to fix the salaries of all the officers of the corporation. This by-law itself raises a strong presumption that the owners of the corporation intended to pay its officers for their services. The board of directors could not fix the salaries of officers, if no salaries were to be paid. When to this by-law is added the express finding of the referee that it was understood and agreed at the inception of the business of the corporation between all its incorporators and Jenkins, who was chosen president, that he should receive reasonable compensation for his services in that office, and the further fact that he served under this by-law and agreement, and his salary was fixed and allowed without objection thereunder, the conclusion is irresistible that his right to compensation rests upon a valid implied contract between him and all the parties interested in the corporation made before his services were rendered. The acts of the board in fixing the amount of his salary were expressly authorized by the by-law, and were naught but the performance of the prior agreement by which the corporation was bound. The note was not without consideration, and the judgment upon it was right.

There are 48 assignments of error in the record in this case. We have carefully examined them all. The conclusions at which we have arrived upon those already discussed are decisive of all the material questions in the case, and it is unnecessary to extend this opinion further. The assignments which we have not discussed were either intended to present the questions considered in other forms, or are without substantial merit. The judgment below must be affirmed, and it is so ordered.

(94 Fed. 524.)

BUNDY MFG. CO. v. DETROIT TIME-REGISTER CO.

(Circuit Court of Appeals, Sixth Circuit. May 2, 1899.)

No. 604.

1. PATENTS—INFRINGEMENT—JOINDER OF ELEMENTS.
   One may not escape infringement by the mere joinder of two elements into one integral part, if the united part effects the same results, in substantially the same way, as the separate parts before the union.

2. SAME—MECHANICAL EQUIVALENTS—WORKMEN'S TIME RECORDERS.
   In a workman's time recorder, the mere substitution, for a turning key having the workman's number on its ward, of a pushing key having such number upon a fin, the function of each being to set in motion mechanism which operate the impression devices, is but the use of a mechanical equivalent.

3. SAME.
   A patent for a workman's time recorder, in which the printing is done by pressing a recording strip against the type by a blow from an impression

Digitized by Google

hammer, is infringed by a mechanism in which the type is pressed upon the recording strip by pressure only. The two methods are mere mechanical equivalents.

4. SAME—CONSTRUCTION OF PATENT.
To be entitled to the benefit of the doctrine of equivalents, it is not essential that the patent shall be for a pioneer invention in the broad sense of that term. If the invention is one which marks a decided step in the art, and has proved of value to the public, the patentee will be entitled to the benefit of the rule of equivalents, though not in so liberal a degree as if his invention were of a primary character.

5. SAME—MERITORIOUSNESS OF INVENTION.
The meritoriousness of an improvement depends—First, upon the extent to which the former art taught or suggested the step taken; and, second, upon the advance made in the usefulness of the machine as improved.

6. SAME—ESTOPPEL BY ACCEPTING ACTION OF PATENT OFFICE.
To be estopped by the action of the patent office, the patentee must be shown to have surrendered something which he now claims in order to obtain that which was allowed.

7. SAME—WORKMEN'S TIME RECORDERS.
The Bundy patent, No. 452,894, for a workman's time recorder, construed, and *held* infringed as to claims 3 and 4 by the time recorder of the Watson patent, No. 515,805.

8. SAME.
The Bauer patent, No. 305,882, for a watchman's time detector, construed, limited, and *held* not infringed as to claim 4 by the time recorder of the Watson Patent, No. 515,805.

Appeal from the Circuit Court of the United States for the Eastern District of Michigan.

Alan D. Kenyon and Wm. Houston Kenyon, for appellant.
James Whittemore, for appellee.

Before TAFT and LURTON, Circuit Judges, and CLARK, District Judge.

LURTON, Circuit Judge. This is a bill to restrain infringement of the third and fourth claims of patent No. 452,894, of May 26, 1891, to W. L. Bundy, for a workman's time recorder; and also the fourth claim of patent No. 305,882, of September 30, 1884, to W. Bauer, for a watchman's time detector. The defendant is a corporation known as the Detroit Time-Register Company, and is engaged in making and selling a workman's time recorder, under a patent to N. M. Watson, No. 515,805, of March 6, 1894. Bundy's invention relates to time-recording mechanism actuated directly by a clock, and connections with a clock, by which the time of the arrival or departure of workmen, clerks, or other employés may be recorded by the employés themselves. His specifications state that his object is "to provide a mechanism by which each workman or employé in a shop or factory, or the like, will, by his own act, accurately record the time of his arrival or departure, thereby preventing all disputes, each workman having his own key, and being known by an arbitrary number, which is embossed upon the bit of the key, and, upon its being inserted and turned, will present the embossed number in alignment with the numbers upon the hour and minute recording wheels, and through the agency of a hammer and pad thereon, actuated by the key, and a ribbon and strip of paper in proper juxtaposition the hour, minute, and the number of the key will be printed upon the paper, and a feed

Digitized by Google

mechanism will shift the paper and ribbon a fixed space, ready for the operation of the printing mechanism by the next workman and the recording of his time and the number of his key, as before. Then the 'time' of each workman is made up from the paper strip, crediting each one with the time between his arrival and departure, whether it be full time or only a part thereof." The claims which are here involved are as follows:

"(3) A clock movement and hour and minute recording wheels, synchronous mechanism actuating said wheels, a key provided with a bit carrying numbers, brought into alignment with the hour and minute wheels by the turning of the key, a recording strip, and an impression hammer, in combination as set forth. (4) A clock movement, hour and minute recording wheels, synchronous mechanism actuating said wheels, a key provided with a bit carrying numbers brought into alignment with the hour and minute wheels by turning of the key, a ward upon the key, a recording strip, and an impression hammer operated by mechanism actuated by the ward of said key as it is turned, in combination as set forth."

The patentee does not claim any novelty in any of the parts or elements of his combination. The claims involved are distinctly for the union or combination of all the elements arranged and combined together so as to accomplish a given result, in the manner described. Neither does the complainant insist that the structure of the defendant includes the precise mechanism described in the specifications of his patent, nor that the elements combined to produce the results attained are identically the elements described in the patent to Bundy. What is claimed is this: That both the elements and actuating mechanism found in the structure of the defendant are mechanical equivalents for those found in the Bundy machine, and that they are combined in substantially the same way, so that the mechanical equivalent for each element performs substantially the same function of the corresponding element in the complainant's machine; and that the differences between the elements combined in the two machines, and in the mode of arrangement, are merely colorable according to the rule forbidding the use of known equivalents.

The learned judge who decided this case in the circuit court, after an elaborate consideration of the claims of the Bundy patent in the light of the history of the art and of the occurrences in the patent office, reached the conclusion that the Bundy patent was not entitled to a liberal construction, nor to the benefit of the doctrine of equivalents, but was limited to the specific device described and claimed by him, and that, thus construed, the defendant's structure did not infringe. In this interpretation of Bundy's invention we are unable to agree. Our inability to agree with the conclusions of the circuit court results from the view we take of the meritoriousness of Bundy's combination in producing a simple and accurate time recorder, capable of being used by a very large number of workmen in rapid succession, and without danger of confusion or error. The results attained by him were such as to distinctly mark the line between success and failure, and the rapid occupation of the field by his invention serves as evidence that the public for the first time realized that in his time recorder had been found a practical structure, which accomplished accurately and simply what no previous invention would do. It is manifest from the conditions under which such a mechanism

Digitized by Google

must be operated, as well as from the results sought by its use, that to be efficient it must be capable of correctly recording in rapid succession, not only the time of arrival or departure, but some number or mark by which each of an indefinite number of employés may be distinguished from all of his associates in connection with the record of his time. But this record must be one which can be automatically made by the machine when set in motion by the workman. This condition makes it of the highest importance to the usefulness of the recorder that the act to be done by the workman shall be single and simple, so simple that employés of every grade of intelligence shall be capable of operating the machine without liability of mistake in the record or injury to the machine. This was the problem which required solution in order to produce a practical time recorder, and this problem is fully met in the invention of Bundy. But it is said that, if the claims of his patent are so broadly construed as to give him the benefit of a liberal application of the rule of equivalents, it will be found that he was anticipated; and for the purpose of limiting Bundy to the precise structure described by him the defendants have gone very deeply into the so-called "history of the art." For this purpose a series of patents for watchman's clocks have been introduced, including the following: J. E. Buerk, August 25, 1865; Anton Myers, No. 117,442, of 1871; L. Aldridge, of 1875; W. Imhauser, of 1876; and W. Bauer, No. 305,882. The general nature of the machines represented by the patents referred to, and their uses, is fully discussed and explained in Imhauser v. Buerk, 101 U. S. 647. The learned counsel for defendant, in his brief, thus describes these clocks, and the limitation upon their usefulness, by saying:

"In all these watchman clocks, however, the recording strip was moved by the clock, and was synchronized therewith, so that they were not adapted to be used by a large number of watchmen in quick succession, because, if so used, they would print in the same place; but were rather intended for use by one or a few watchmen at different intervals of time. In other words, there was no paper feed after each operation."

It is true that in a patent to B. Bocklin, No. 199,181, for a telltale clock, there is found a feeding device by which the recording strip is fed forward with each operation. But Bocklin's invention, though embodying hour and minute recording wheels, synchronized with a clock, and a recording strip carried forward with each operation of the machine, was in fact intended only for use by watchmen who might record thereon the time of call at the station. There was no way by which the machine could be used by more than a very few watchmen, because no means for identifying a large number of employés was included in the invention. The problem was a distinct one. A watchman's clock, to be used by one or two or three watchmen, or possibly as high as seven, was well known. But such machines were not adapted for use as time recorders for an indefinite number of records made in quick succession. The evolution of a practical workman's time recorder out of the improved watchman's clock of either Bauer or Bocklin required the discovery and application of mechanism by means of which each of an indefinite number of employes of varying degrees of intelligence and care might, by a single and simple act,

Digitized by Google

identify himself in association with a record of the exact time of doing that act. This involved invention. This is just what Bundy was the first to do, in a way which met all the conditions requisite to a time recorder which should rapidly, accurately, and without danger of mistake keep the time for a great number of men, who might arrive or depart in quick succession. A number of others sought to accomplish this end before Bundy made the invention now involved. Those which are regarded as the closest anticipations are the patents of Lane & Hill, No. 210,788, dated December, 1878; C. S. Haskell, No. 319,092, dated June 2, 1865; W. L. Bundy, No. 393,205, dated November, 1888; and of A. Dey, No. 411,586, dated September 24, 1889. The patent in suit to W. L. Bundy follows all of these, and is dated May 26, 1891. That which is the closest approximation to Bundy's patent is also the first in time of those mentioned, being the patent to Lane & Hill. This structure is shown in Figs. 1 to 7, inclusive, set out below.

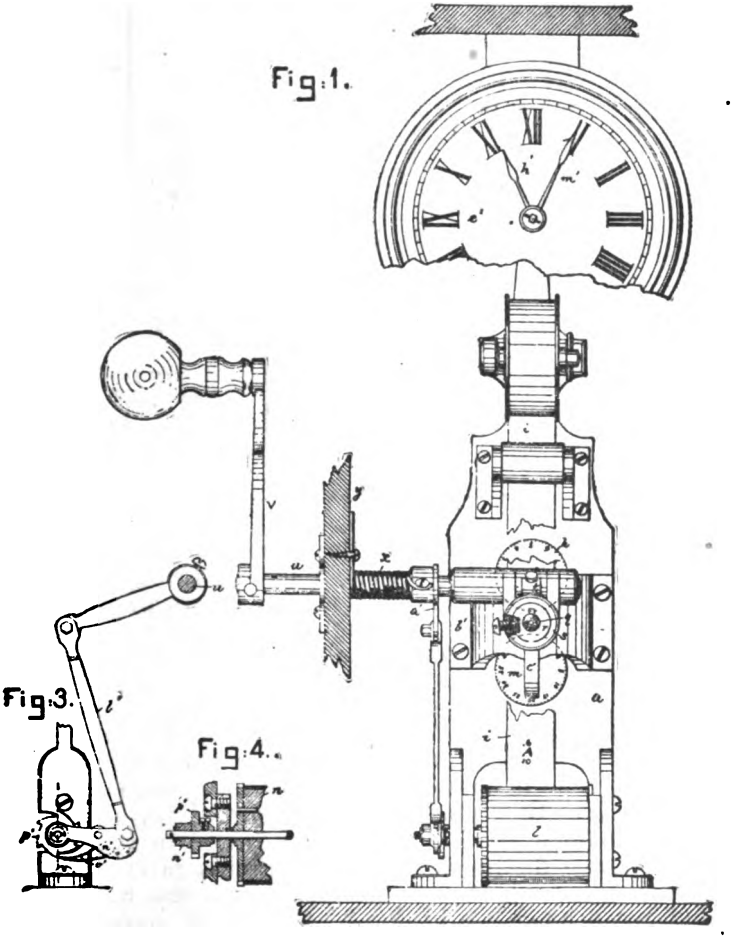

Digitized by Google

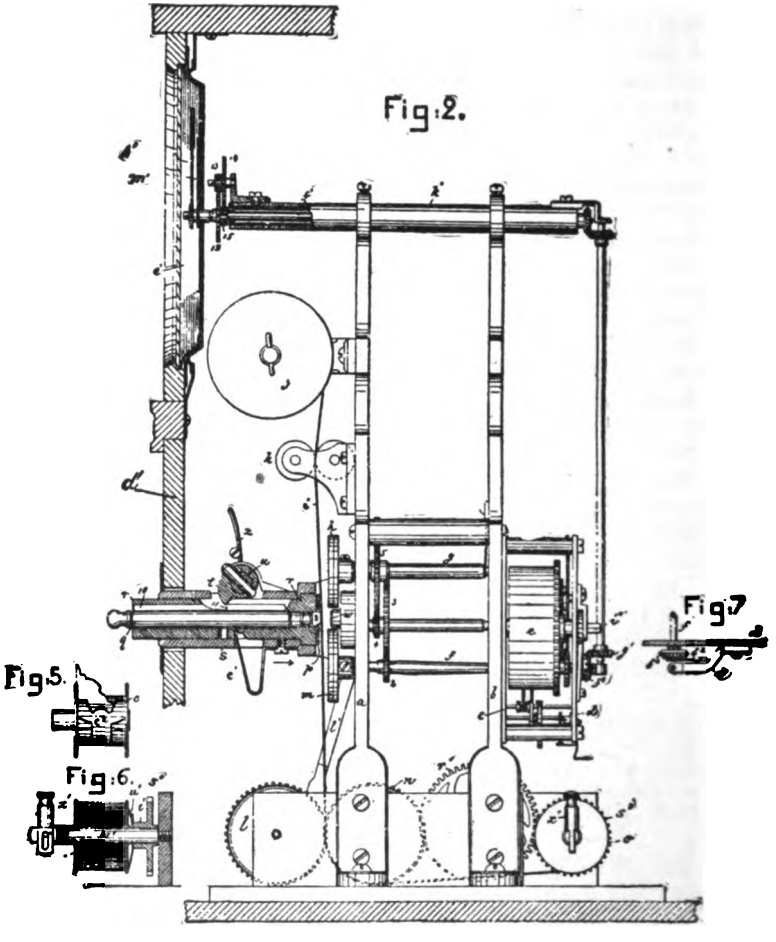

It contains, like all patents for time recorders, a clock movement, hour and minute recording wheels, h and m, synchronous mechanism for actuating these wheels, a movable recording strip, i, and impression mechanism for pressing type on the recording wheels, h and m, and upon the end of the so-called "key," q, against the recording strip which runs between the type upon the registering time wheels, and the type recording the workman's number carried on the end of the key, q. No inking ribbon is used, the record being embossed. The so-called "key," q, is not a key in any true sense, inasmuch as it does not set in motion or actuate any mechanism whatever. It is properly an elongated type, the type being carried on its inner head, 8. The type carried in this way represents the number distinguishing the workman carrying and using the particular key. This key is inserted in a slot in the plunger, r, in a sleeve, s, as shown in Fig. 2. The fin, 10, shown on the key

Digitized by Google

in Fig. 2, performs no function in operating the mechanism, and serves only to keep the key in an upright position. This machine is operated by inserting the key, 9, in the plunger, r, and then grasping and turning the handle, v, shown in Fig. 1. The fin, 10, is notched, as shown by 11 in Fig. 2, "as is also the shank of the plunger, r, to permit the cam, t, or an arm or toe on the shaft, u, when turned by the workman seizing the handle, v, to descend into an opening in the sleeve, s, and act against the shoulders of the key and of the plunger, force the key, plunger, and pad forward, and press the strip, i, against the registers, h, m, and emboss or imprint upon the strip the hour and minute of the day at which the movement took place. The head, 8, acts against the bed, w, placed opposite it, behind the strip, so that with each record of hours and minutes there also appears a letter, character or number to designate a person." This embossing, it will be noticed, occurs on both sides of the recording strip; that is, the number carried on the workman's key is embossed on one side, while the figures representing time are embossed upon the opposite side. This invention was never put into practical use, none being ever sold or made for purposes of sale. The mechanism of the Lane & Hill device is put in motion, not by the operation of any key, but by the handle, v. The key is merely an elongated type, and performs no function except to carry into proper position the type on its end, and to act in conjunction with the plunger into which it is inserted as a part of the impression mechanism by which the embossing is done. The handle, v, actuates the mechanism for feeding forward the recording strip as well as the impression mechanism by which the printing is done. The defect in this device as a practical workman's time recorder is that its operation requires two entirely distinct acts to be done by the workman: First, he must insert the key in the slot of the plunger far enough for the cam, t, to engage the notch, 11; and, second, he must grasp and turn the handle, v, with the requisite force to press the plunger forward and do the work of embossing. The necessity for doing two distinct things is in itself most objectionable in a device of this kind. The mechanism was liable to injury if the key is not inserted far enough to enable the cam to engage the key in its notch, and was liable to become jammed in the plunger. Excessive force, altogether likely when men are crowding and indifferent, applied to the crank handle, is likely to result in injury to the crank by loosening or detaching the handle from the shaft. All of these defects are pointed out by experts, in addition to the fact that the operation of the machine is necessarily much slower than that of one requiring only one simple act by the operator. This invention was never put into practical use, none having ever been made for the market.

The Haskell patent is wholly unlike the Bundy in material respects. Haskell attempted to solve the problem of identifying the workmen by requiring them to write their names or numbers upon the paper strip and then to print the time by revolving a handle. The Bundy patent of 1888 undertook to accomplish the desired result by placing

Digitized by Google

numbers representing the different employés upon wheels called "operators' wheels" within the casing of the clock. The workman's number is brought into alignment with the type upon the time-recording wheels by lugs upon the key of different shapes and lengths, operating through a complicated and delicate mechanism to move the operator's type wheel. The intricacy and delicacy of the mechanism necessary to bring the particular number desired into alignment was such as to make the machine unreliable, and of no practical value whatever. It was but a toy machine, and was worthless for actual use. The Dey machine was another which placed the workman's number upon an operator's type wheel inside the machine. These wheels were connected with indicators on certain index plates on the face of the recorder. The workman was first required to turn the indicator opposite to the desired number on the index plate, which brought the corresponding number on the operator's type wheel into alignment with the type-recording wheels. Then the workman is required to pull down a lever which sets in motion the mechanism which does the printing, and feeds forward the strip and inking ribbon. This constituted the state of the art when Bundy made the invention covered by his patent of 1891. There was no practical operative machine which fully met the conditions incident to the successful use of such a recorder, where both simplicity and accuracy were essentials to usefulness.

The Bundy time recorder is a structure which automatically records upon a movable recording strip the time of the arrival and departure of employés, and, opposite the time, records the individual mark or number distinguishing the different workmen, so that the precise time of the arrival of each workman is distinctly recorded. Each workman is furnished with a key, upon a bit or ward of which is a number in type, by which the particular workman is distinguished. The record is made by the simple operation of inserting and turning the key. The recording strip of the claims is a movable strip fed forward with each turning of the key, and with this strip the inking ribbon is also carried. The single and simple operation of turning the key not only brings the type printing the workman's number into alignment with the type on the time recording wheels, but by the same operation the ward of the key sets in motion mechanism within the machine by which the recording strip and inking ribbon are fed forward, and also actuates suitable impression mechanism by which the type carried on another ward of the key for printing the workman's number and the type upon the time-recording wheels for printing the time indicated by the clock, are brought into contact with the inking ribbon and recording strip and a printed record made. The very essence of this invention lies in Bundy's key and its functions, for by the simple and easy operation of that key the work of aligning, printing, and feeding is done. This structure is sufficiently illustrated by Figs. 1, 3, 4, 5, 10, 11, and 12 of the drawings of the patent, which are set out on following pages.

Fig. 1 is a front elevation of a clock, having its front broken away to show the recording mechanism. Fig. 3 is a side elevation of the recording mechanism, showing the impression hammer and helve

Digitized by Google

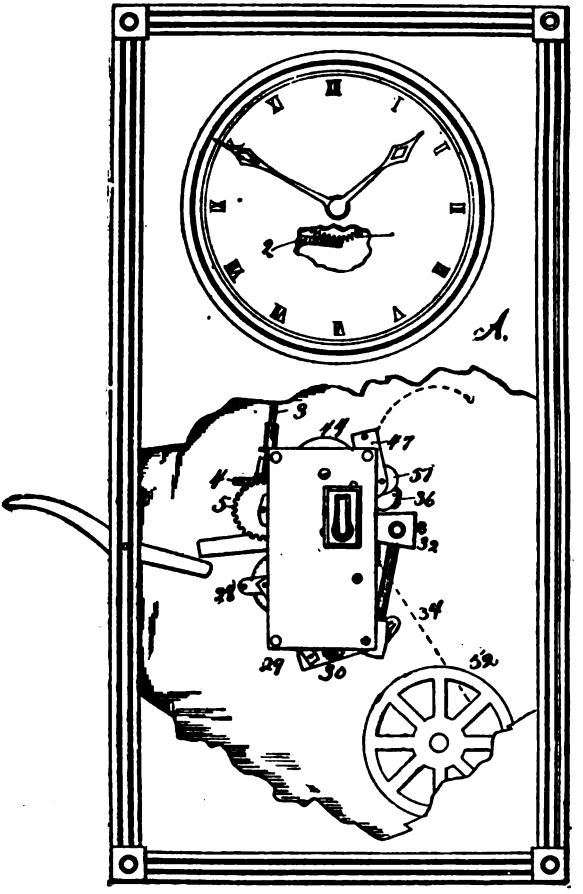

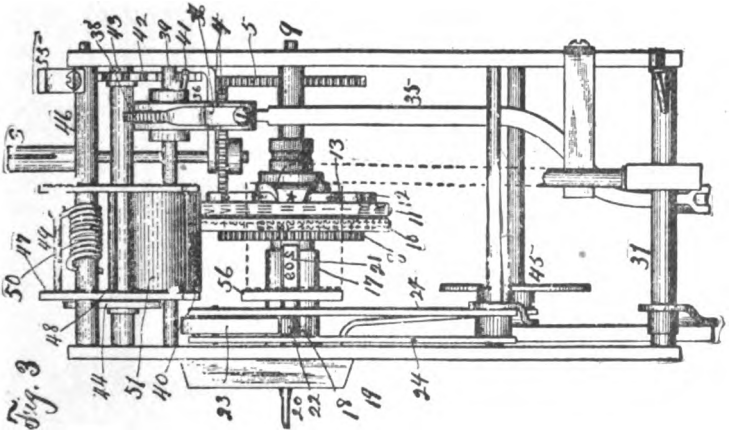

Digitized by Google

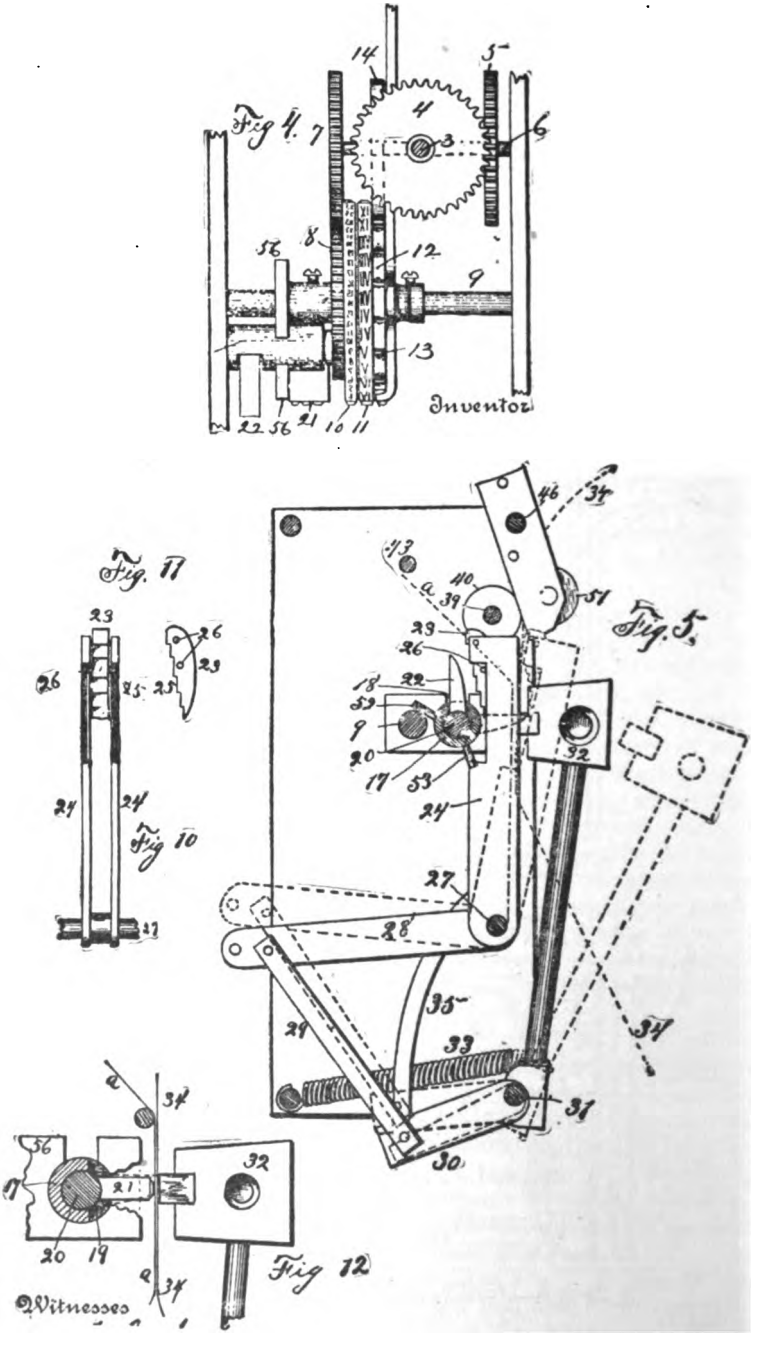

Digitized by Google

in partly dotted lines. Fig. 4 is a top plan of the hour and minute recording wheels, 10 and 11, the mechanism for actuating them, inserted and turned into position in alignment with these wheels, ready for the making of the impression, as shown in Fig. 3. Fig. 7 is a side elevation of Bundy's key, showing an arbitrary number on the so-called "bit," 21. Fig. 5 is a sectional elevation of the recording mechanism, the front being removed, and the hour and minute wheels and the means for actuating them being also left off, and showing in dotted lines the position assumed by the hammer and helve, and their operating mechanism, when a key is turned, and just at the instant when the hammer is about to be released by a slight, further movement of the key. Fig. 10 is a front elevation of the key locking pawl, the parallel bars supporting it, and the shaft to which said bars are secured. Fig. 11 is a side elevation of the pawl detached. Fig. 12 shows the key turned in the key holder, and the hammer in the act of making an impression.

Defendant's mechanism, like that of complainant's, consists of two parts,—a large clock case, containing clock works, and a smaller machine within the clock case. Three drawings found below represent correctly the mechanism involved in the time recording apparatus carried within the clock frame, and show all the material parts of the machine, except the clock movement. These drawings are as follows:

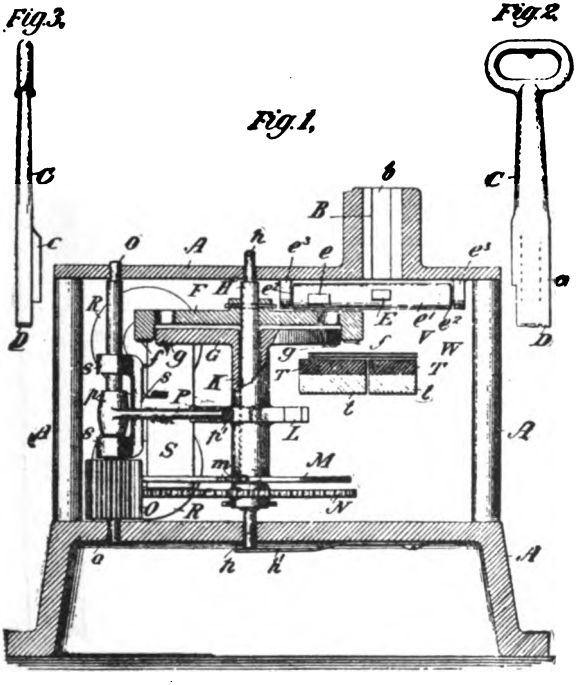

Digitized by Google

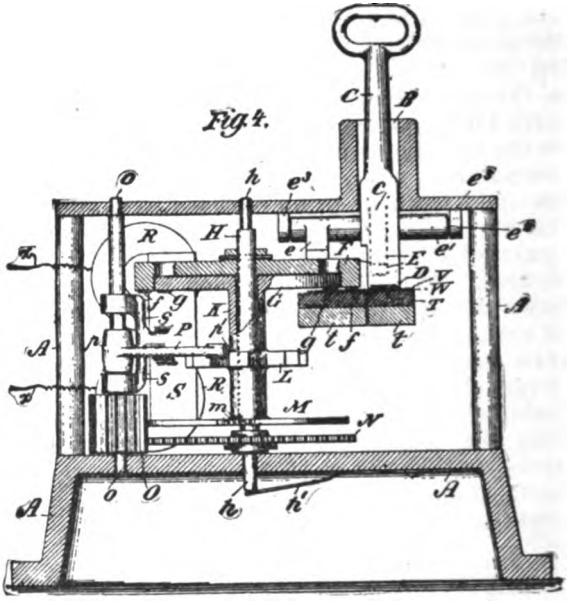
Fig. 4.

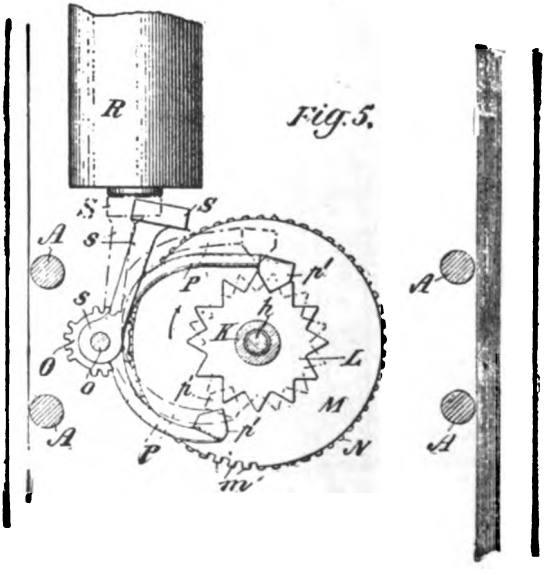
Fig. 5.

The following are the material parts shown by these drawings: First. Hour and minute recording wheels, F and G, with type upon their peripheries representing the hours and minutes. Second. Synchronous mechanism between the clock movement, not shown, and the time-recording wheels, F and G, by which these wheels are actuated. Third. A recording strip, V, and an inking ribbon, W, which are fed forward by operation of the key each time it is inserted and pushed. Fourth. An impression mechanism consisting of the key, C, the arms, E, e, rocking bar, é, wheels, F and G, and the printing cushions, T, t. Fifth. The key, C, carrying the workman's number on its end, and having a fin or projection, c, on one side, as shown in Fig. 2. This key is inserted in keyhole, B, and is then pushed inward as far as it will go. This inward thrust of the key brings the workman's number on the key into alignment with the type upon the recording wheels, F and G. The same inward thrust causes the fin or ward, C, to strike arm, E, of rocking bar, e′, and depresses it. Arm, e, being fixedly secured to rocking bar, e′, is also depressed. In its downward course, arm, e, strikes against hour wheel, F, forcing it and the minute recording wheel, G, downward. The downward pressure upon the type-recording wheels being simultaneous with the thrust of the key, the workman's number and the type upon the time wheels are simultaneously pressed against the recording strip and inking ribbon and printing cushions, T, t, and effect the printing by force of the inward thrust given the key by the operator. The printing of the workman's number is done independently of the mechanism by which the type on the time wheels are made to print. The stem of the key, when pushed in, passes by the rim of the outer wheel until it strikes with its end against the recording strip and inking ribbon on the printing table or cushion, T. Were it not for the engagement by the projecting fin or ward of the key with the arm, E, the workman's number would alone be embossed or printed. The function of the fin, e, is, through connecting mechanism, to carry down the wheels, F and G, endwise, and press them against the same cushion simultaneously with the number on the end of the key. "Thus the key," says Mr. Barthel, the expert for defendant, "in defendant's machine not only makes the imprint of its own number by the pressure of the hand, but it also presses the hour and minute wheels against the recording strip and printing table to produce a record of the time in connection with that of the key." The pressure upon the key by the hand of the operator is, however, applied to the time-recording wheels only through the rock shaft and arms, E, e, for the key does not come into direct contact with those wheels. The hammer-like force of the inward thrust of the key is transmitted to the recording wheels by the interposition of the rock shaft and its arms, with which the fin or ward of the key engages as it is thrust inward. But the defendant contends that, although its structure greatly resembles that of the complainant, yet they do not infringe, for the following reasons: (1) Because defendant does not use a turning key; (2) defendant does not use a key which carries a number on its bit; (3) defendant does not use an impression hammer.

It is true that defendant does not use a turning key. It has sub-

Digitized by Google

stituted for a turning key one which, instead of turning, performs the same functions by an inward thrust. The so-called "fin" is the equivalent of the ward upon Bundy's key. It does the same work by a thrust, which, in Bundy's machine, is done by turning. The ward or projection in each engages with other mechanism, and transmits motion or sets other mechanism in motion. The defendant's key carries the workman's number upon the end of its stem, instead of upon a projecting piece of metal upon the side of its stem. The so-called "bit" of the complainant serves no other purpose than to carry the number so that, when the key is operated, the number will be in alignment with the time-recording wheels. The "bit" does not set in motion any other mechanism, and performs no function that is not performed by the end of the stem of defendant's key. The most insistent contention of the defendant is that it does not use the "impression hammer" of the Bundy patent. The fourth claim of the Bundy patent includes as an element "an impression hammer, operated by mechanism actuated by the ward of said key as it is turned." The contention is that Bundy is limited to an impression hammer operated by mechanism set in motion by the ward of a turning key, and that it is open to another to substitute for an impression hammer a different impression mechanism, and that it (the defendant) neither uses a hammer nor is its impression mechanism operated by mechanism actuated by the ward of a key "as it is turned." The difference between the two methods of printing is only this: First. Bundy prints by pressing his recording strip against the type, while defendant prints by pressing the type down upon the recording strip. That the printing is done by a blow delivered by Bundy's "hammer," and by pressure only in the device of defendant, is not material. Both methods of printing were well known, and one is the full equivalent of the other. The difference between the two methods is at last but of degree in force used. Both produce the contact necessary to make an impression. Second. The mechanism which operates the impression mechanism in Bundy's device is set in motion by a fin, ward, or projection of a key as it is thrust inward by the hand of the operator. The downward movement of the type-carrying recording wheels is transmitted to them through defendant's rock shaft and its arms which are engaged by the fin of its key as it is pushed in. It is true that this transmitted power only operates to print the hour and minute of the operation from the type carried by the type-recording wheels, for the number carried upon the stem of the operator's key is impressed upon the recording strip only as a result of the direct pressure of the operator's hand in pushing against the key. So far as the printing of the workman's number is done without the interposition of any other mechanism, the defendant possibly does not infringe. But so far as the key gives motion to other parts by which printing is done there is infringement, for to that extent defendant does use an impression mechanism actuated by the operation of the key. The complete impression mechanism of the defendant consists in the time-recording wheels, the rock shaft and its arms, E, e, and the key, C. The function of the impression hammer of the Bundy patent is to print upon the record-

Digitized by Google

ing strip the number of the workman and the time of the operation, and this it does by pressing together the recording strip, inking ribbon, and type. To produce this work, the impression mechanism is actuated by the key. The function of those parts of defendant's mechanism which have been substituted for Bundy's "impression hammer" is to do precisely the same thing by pressing together the strip, the inking ribbon, and the type. One presses the strip down upon the type, and the other presses the type down upon the strip. The instrumentalities by which the type and the paper are brought together are actuated in both cases by the key in the hands of the operator. In one case power is started by turning the key, and in the other by pushing against the key; but in both instances intervening mechanism is engaged and set in motion by metal projections upon the key. That the recording wheels constitute a part of the defendant's impression mechanism is not, in this case, material. One may not escape infringement by the mere joinder of two elements into one integral part. If the united part effects the same results, in substantially the same way as the separate parts before the union, the change is colorable. McDonald v. Whitney, 24 Fed. 600; Ballard v. McCluskey, 58 Fed. 880; Oval Wood Dish Co. v. Sandy Creek, N. Y., Wood Mfg. Co., 60 Fed. 285. It is clear that, unless Bundy is limited to a key which is operated only by turning, and a key which carries the number of the workman only upon a projection upon its side, and to an impression hammer operated only by a ward of a key "as it is turned," the fourth claim of the patent is infringed by the recorder of the defendant. We find nothing in the old art which should limit the claims in suit to the precise structure he has described, or deprive the inventor of a reasonable application of the doctrine of equivalents. The Lane & Hill machine nearly approximated a practical and successful time recorder. But the failure to so arrange the combination as that by the single act of operating the key the work of aligning and printing and feeding might all be done made it an impractical machine for the purposes for which such a machine was useful. The change required in order to make a recorder operative by the single act of turning a key may seem simple, now that it has been done. But neither Haskell, nor Dey, nor Bundy in his 1888 patent, succeeded in supplying the mechanism needed, though they tried in different ways, and although they had before them all that the old watchman's clock art could teach, as well as all that taught by Lane & Hill. Their inventions were useless, because they did not meet the conditions under which a workman's time recorder must be used.

The ingenuity of Bundy in his patent of 1891 lies in his key and its functions as covered by his claims. Whether his key actuated the feeding and printing mechanisms by being turned or pushed is not of the essence of the invention. Pushing keys setting in motion bolts and other mechanism were old, and but the equivalent of keys which did the same thing by turning. The only function of the bit upon which the workman's number was embossed was to carry that number into alignment with the time-recording type. That bit actuated no mechanism. The same result was accomplish-

Digitized by Google

ed by placing the workman's number upon the inner end of a key, which sets in motion other mechanism by pushing in place of turning. Neither was it invention to cause the printing to be done by pressing the type down upon the paper strip instead of pressing the paper strip against the type. The one was the plain equivalent of the other. Reece Buttonhole Mach. Co. v. Globe Buttonhole Mach. Co., 10 C. C. A. 194, 61 Fed. 958. That defendant's impression mechanism is not in the form or shape of a hammer is of no consequence unless the form itself is of the essence of the invention. This it was not.

In Winans v. Denmead, 15 How. 330–342, the court, in upholding a claim which covered a railroad car made of sheet iron "in the form of a frustum of a cone" against an infringer who had used a different geometrical form without introducing any new mechanical principle or mode of operation, or attaining any new result, among other things, said:

"Undoubtedly there may be cases in which the letters patent do include only the particular form described and claimed. Davis v. Palmer, 2 Brock. 309, Fed. Cas. No. 3,645, seems to have been one of those cases. But they are in entire accordance with what is above stated. The reason why such a patent covers only one geometrical form is not that the patentee has described and claimed that form only; it is because that form only is capable of embodying his invention; and, consequently, if the form is not copied, the invention is not used. Where form and substance are inseparable, it is enough to look at the form only. Where they are separable, where the whole substance of the invention may be copied in a different form, it is the duty of courts and juries to look through the form for the substance of the invention,—for that which entitled the inventor to his patent, and which the patent was designed to secure. Where that is found, there is an infringement; and it is not a defense that it is embodied in a form not described, and in terms claimed by the patentee. Patentees sometimes add to their claims an express declaration to the effect that the claim extends to the thing patented, however its form or proportions may be varied. But this is unnecessary. The law so interprets the claim without the addition of these words. The exclusive right to the thing patented is not secured if the public are at liberty to make substantial copies of it, varying its form or proportions; and therefore the patentee, having described his invention, and shown its principles, and claimed it in that form which most perfectly embodies it, is, in contemplation of law, deemed to claim every form in which his invention may be copied, unless he manifests an intention to disclaim some of those forms."

So, in Machine Co. v. Murphy, 97 U. S. 120–125, the court said:

"Except where form is of the essence of the invention, it has but little weight in the decision of such an issue; the correct rule being that, in determining the question of infringement, the court or jury, as the case may be, are not to judge of similarities or differences by the names of things, but are to look at the machines, or their several devices or elements, in the light of what they do, or what office or function they perform, and how they perform it, and to find that one thing is substantially the same as another if it performs substantially the same function in substantially the same manner, to obtain a like result, always bearing in mind that devices in a patented machine are different, in the sense of the patent law, when they perform different functions, or in a different way, or produce a substantially different result. Nor is it safe to give much heed to the fact that the corresponding device in two machines, organized to accomplish the same result, are different in shape or form, one from the other, as it is necessary in every special investigation to look at the mode of operation, or the way the device works, and at the result, as well as at the means by which the result is obtained."

Digitized by Google

We are not unaware of the principle that the mere fact that two machines produce the same effect does not establish that one is an infringement of the other. If it were so, it would operate as an admission that an inventor is entitled to patent his function. To be an infringement, "the alleged infringer must have done something more than reach the same result. He must have reached it by substantially the same or similar means, or the rule that the function of a machine cannot be patented is of no practical value." Westinghouse v. Power-Brake Co., 170 U. S. 569, 18 Sup. Ct. 723. But, on the other hand, a charge of infringement is often made out, though the letter of the claim be avoided. Machine Co. v. Murphy, 97 U. S. 120–125; Elizabeth v. Pavement Co., Id. 126–137; Hoyt v. Horne, 145 U. S. 302–308, 12 Sup. Ct. 922; Westinghouse v. Power-Brake Co., 170 U. S. 537, 538, 18 Sup. Ct. 707. That Bundy is not, in a broad sense, a pioneer in this art, may be conceded. But his invention was such as to mark a distinct step in the progress of the art. Indeed, his mechanism was the first successful structure of its kind. To be entitled to the benefit of the doctrine of equivalents, it is not essential that the patent shall be for a pioneer invention in the broad sense of that term. If his invention is one which has marked a decided step in the art, and has proven of value to the public, he will be entitled to the benefit of the rule of equivalents, though not in so liberal a degree as if his invention was of a primary character. Mr. Justice Jackson, in Miller v. Manufacturing Co., 151 U. S. 186, 207, 14 Sup. Ct. 310, 318, said, "The range of equivalents depends upon the extent and nature of the invention." The meritoriousness of an improvement depends —First, upon the extent to which the former art taught or suggested the step taken; and, second, upon the advance made in the usefulness of the machine as improved. In McCormick Harvesting Mach. Co. v. C. Aultman & Co., 37 U. S. App. 299, 16 C. C. A. 259, and 69 Fed. 371, this court said:

"Whether he specifically claims in his patent the benefit of equivalents or not, the law allows them to him according to the nature of his patent. If it is a mere improvement on a successful machine, a mere tributary invention, or a device the novelty of which is confined by the past art to the particular form shown, the range of the equivalents is narrowly restricted. It is a pioneer patent with a new result. The range is very wide, and is not restricted by the failure of the patentee to describe and claim combinations of equivalents. Nothing will restrict the pioneer patentee's rights in this regard save the use of language in his specifications and claims which permits no other reasonable construction than one attributing to the patentee a positive intention to limit the scope of his invention in some particular to the exact form of the device he shows, and a consequent willingness to abandon to the public any other form, should it be adopted and prove useful. Instances of such a limitation may be found in Keystone Bridge Co. v. Phœnix Iron Co., 95 U. S. 274, and in Brown v. Manufacturing Co., 6 U. S. App. 427, 16 U. S. App. 234, 6 C. C. A. 528, and 57 Fed. 731."

In the view we have of the step taken by Bundy, we think he is entitled to protect his real invention by a reasonable application of the rule of equivalents. We find in the structure of defendant all the elements of Bundy's combination, or their mechanical equivalents, combined in substantially the same way, and performing.

Digitized by Google

substantially the same functions, and producing identically the same result as that effected by the same elements in Bundy's device.

Neither do we find anything in the proceedings in the patent office which, properly understood, should limit him to either a turning key or one carrying the operator's number on its bit. The circuit court fell into error in assuming that claim 3 of Bundy's patent was substituted for claim 2 of his original claims, the latter being canceled upon a reference to the patent of Lane & Hill. Bundy's claims 1 and 2, as originally filed, were as follows:

"(1) In a time-recording apparatus, hour and minute wheels, a rotating key provided with a number or character upon a bit thereof, to register the operators upon a strip, and an impression hammer. (2) In a time-recording apparatus, the combination with the impression hammer of hour and minute registering wheels, a key inserted and turned to bring the number or character upon the bit thereof into alignment with said wheels and a registering strip."

Claims 10 and 11 of his original application were as follows:

"(10) A clock movement, hour and minute registering wheels, synchronous mechanism actuating said wheels independently of each other and actuated by the clock movement, and a key provided with a bit carrying numbers brought into alignment with the hour and minute wheels by the turning of the key, a registering strip and an impression hammer, in combination as set forth. (11) A clock movement, hour and minute registering wheels, snychronous mechanism actuating said wheels independently of each other and actuated by the clock movement, a key provided with a bit carrying numbers brought into alignment with the hour and minute wheels by turning of the key, a ward upon the key, a registering strip, an impression hammer operated by mechanism actuated by the ward of said key as it is turned, in combination as set forth."

The other claims of his original application relate entirely to different subjects, and have no effect in the construction of those allowed and involved in this case. Claim 1 was rejected upon a reference to the Bauer watchman clock patent, No. 305,882, and because the elements were not claimed in combination. Claim 2 was rejected upon the statement that it was met in the Lane & Hill patent, No. 210,788. Claims 10 and 11 were rejected because it was "not seen that the wheels" are independent of each other, as stated. Claim 1 was amended so as to read as follows:

"(1) In a time-recording apparatus, the combination with the hour and minute wheels rotated synchronously with a clock movement of a key provided with a number or character upon a bit thereof, to be rotated to record the number or character upon a strip, and an impression hammer."

In respect to the reference to Bauer, Bundy replied to the ruling of the examiner that "the Bauer patent does not show the synchronous hour and minute wheels, and consequently this imparts novelty to the claim as amended." This claim, as amended, was again rejected, the examiner ruling that "the claim now presented is held to cover nothing patentable over what is shown in Bauer, before cited." Claim 2 was amended by changing "registering" to "recording," and again filed with the insistence that "this claim is not anticipated by the Lane & Hill patent, 210,788, for the reason that in that patent the key, when inserted, is in alignment for the printing. My device requires the turning of the key to bring the number into alignment, and my claim is specific as to

Digitized by Google

the turning of the key." The claim, as amended, was again rejected upon the ground that "the second claim as met in Lane & Hill, before given, in view of the fact that it does not make any difference, in a patentable sense, whether the key is turned, as in Bauer, or not turned, as in Lane & Hill." Claim 10 was amended by changing "registering" to "recording," and by striking out the words "independently of each other," thus meeting the only objection made to that claim. Claim 11 was amended in the same way to meet the same objection, and both 10 and 11, as thus amended, were allowed as claims 3 and 4 of the patent as issued.

It will thus be seen that neither of the claims here involved were ever rejected upon a reference to either Bauer or Lane & Hill, and were originally disallowed upon a ground in no wise affecting the question of infringement here involved, and, as allowed. include everything included as originally filed, except the clause as to the independent character of the two recording wheels. Both of these claims as originally presented concluded with the words, "in combination as set forth." Claims 1 and 2, as rejected, were manifestly unwarrantably broad claims. Neither contained the limiting words, "in combination as set forth." Both were subject to a construction which would include a key as an element which had no other function than to carry the workman's number into alignment with the recording wheels. This was the construction placed upon the claims by the examiner. Thus construed, it was manifestly a matter of no importance, in a patentable sense, whether such alignment was effected by a pushing or turning key, and hence the aptness of the reference to Bauer and Lane & Hill. Both claims were subject to a construction which would include recording strip and impression mechanism actuated by mechanism not set in motion by the operation of the key, but by a crank or handle as in Lane & Hill. The effect to be attached to the rejection of a claim by the patent office was thoroughly considered by this court in Thomas v. Spring Co., 47 U. S. App. 125–145, 23 C. C. A. 211, 221, and 77 Fed. 420, 430, and the general rule stated to be that, "when the patent office rejects a claim covering a certain device on its merits, and such rejection is acquiesced in, and the patent issues, the applicant cannot afterwards be allowed a construction of the claims allowed wide enough to embrace the claim which was rejected." Bundy was not required to limit himself to a "turning key" in order to secure the allowance of his claims. When he called attention to the fact that his device required the turning of his key when inserted "in order to bring the number thereon into alignment," and then sought to sustain claims which would have included a device in which the feeding and printing mechanism might be set in motion by some means independent of the key, as in Lane & Hill, the examiner disposed of that distinction by saying that "it made no difference, in a patentable sense, whether the key is turned as in Bauer, or not turned, as in Lane & Hill." The essential difference between Lane & Hill and Bundy was in the fact that Bundy's key actuated his printing and feeding mechanism, and also carried the operator's number into align-

Digitized by Google

ment with the type upon the type-recording wheels. The last function is the only function of the so-called "key" of Lane & Hill, the printing and feeding mechanism in that device being set in motion by other and independent means. Now, whether Bundy's key actuated his feeding and printing mechanism by being turned or by being thrust is not of the essence of his invention at all, and, to use the ruling of the patent office, "it makes no difference, in a patentable sense, whether the key is turned as in Bauer, or not turned as in Lane & Hill." Bundy did not, therefore, surrender every other mode of operating his key, and limit himself to a turning key, by any amendment which was forced upon him in the patent office. If he is limited to a turning key, and must stand by and see his real invention robbed by the mere change in the form of the key, whereby, by an inward thrust, it engages with and actuates mechanisms for printing and feeding which are but the equivalents of those actuated by his turning key, it must be the result of a strict interpretation of his claims by reason of the language he has voluntarily employed in them. This, we have already seen, is not the necessary legal result, and that he is entitled to a reasonable equivalent for a turning key. To be estopped by the action of the patent office, the patentee must be shown to have surrendered something which he now claims in order to obtain that which was allowed. That which he was required to surrender was the broad claims included in his original claims, numbered 1 and 2. When we limit him to a mechanism in which his printing and feeding devices are actuated by the operation of his key in the hands of the operator, we have given to the rejection of those claims every effect which is required.

The third and fourth claims should, as a consequence of the cancellation of claims 1 and 2, be so construed as not to include the broad claims of the rejected application. But this we have done independently of any effect resulting from the cancellation of claims by the patent office, and we have construed both claims 3 and 4 as including a recording strip and impression hammer actuated by mechanism set in motion by the operation of the key in the hands of the operator. True, we have not limited Bundy to impression mechanism in the shape or form of a hammer, nor to a key operated only by turning or carrying the workman's number only on a projection upon its side. To have done so would be to destroy his patent, and open his invention to the assaults of those who, with only colorable changes, could avail themselves of the very heart of his invention.

Complainant also owns the patent to Bauer of September 30, 1884, for a watchman's time detector, and it is claimed that defendant's key infringes the fourth claim of that patent. Bauer's patent expired July 26, 1896, the date of the expiration of his English patent. This bill was filed April 2, 1896, and therefore before the expiration of the patent. The fourth claim of Bauer is only for a key and a key "for a time detector." It is expressly limited to a key "having a bit or bits provided with projecting type to make the impression on the slip substantially as set forth." If

Digitized by Google

construed to cover a key which does not turn, and which carries type only on the end of its stem, it would be anticipated by the key in Lane & Hill. It must be limited to the key described, and, as thus limited, defendant does not infringe.

The decree must be reversed as to the third and fourth claims of the Bundy patent, and remanded, with directions to enter a decree finding defendant guilty of infringement of those claims, and for an injunction and an account. Appellee will pay the costs of this appeal.

(94 Fed. 545.)

THE SAPPHO.

(Circuit Court of Appeals, Fourth Circuit. May 2, 1899.)

No. 291.

1. APPEAL IN ADMIRALTY—REVIEW OF QUESTIONS OF FACT.
   Where the evidence in a suit in admiralty is taken before an examiner, the decision of the trial court on questions of fact is not entitled to the same controlling weight as where the judge saw and heard the witnesses testify, and will be more readily reviewed by an appellate court.
2. CONTRACT FOR REPAIR OF VESSEL—EXTRA WORK—WAIVER OF WRITTEN CONTRACT.
   A provision of a written contract for the repair of a vessel, that no extra work should be done unless an estimate in writing was first made and submitted to and signed by an officer of the company owning the vessel, may be waived; and where, after the vessel was stripped to begin the work, it was found to be impossible to make the repairs specified in the contract without to a large extent rebuilding the hull, and after consultation with the officers of the company the contractor was told by the president to go on with the work, which he did, and under the direction of a superintendent employed by the company, and with the knowledge of its officers and directors, replaced all the rotten parts of the hull, and made the vessel sound and seaworthy, the company, having accepted the vessel, must be considered as having waived the written contract, and cannot invoke its provisions to defeat recovery for all work done not specified therein.
3. SAME—WAIVER BY CORPORATION.
   The fact that the owner of the vessel was a corporation, and took no formal action in the matter by its board of directors, would not prevent its being bound by the action of its officers, and the acceptance of the benefit of the contractor's work without objection.

Appeal from the District Court of the United States for the District of South Carolina.

J. P. K. Bryan, for appellants.

J. N. Nathans and Henry Buist, for appellees.

Before GOFF, Circuit Judge, and MORRIS and WADDILL, District Judges.

WADDILL, District Judge. These are two libels in rem against the steamer Sappho, her tackle, apparel, etc., owned by the respondent company, the Mt. Pleasant & Sullivan's Island Ferry Company, a corporation of South Carolina, conducting a ferry between the city of Charleston, Mt. Pleasant, and Sullivan's Island, in said state, the

Digitized by Google

said steamer being employed in that service. The controversy arose out of a contract for repairs to be made upon the said steamer. The claim of Samuel J. Pregnall, libelant, contractor and shipwright, is for a balance due on account for repairs, labor, and supplies in the sum of $2,230.82. The claim of William M. Bird & Co., libelants, merchants, is for $867.43 for materials furnished for the steamer in making such repairs. In the lower court all of the testimony was taken before a special examiner, appointed for the purpose, and upon the depositions so taken the two causes were heard together, and the district court, by order of the 30th of August, 1898, dismissed both libels. 89 Fed. 366. The libelant Samuel J. Pregnall, on the 25th day of February, 1897, entered into a written contract with the respondent company for making certain repairs to the said steamer Sappho. specifically set forth in said contract, and which work may be particularized as follows:

"Haul out the said steamer on the marine railway of said contractor; take out and renew all clamps; take out and renew main water-wheel beams; renew the guards, and also the mudsills all around the steamer; put in new breast hooks; put in two extra sister keelsons; put in two new extra standards, one in each side, with hog rods and one-half inch iron; strip off entire copper from bottom, reef out all old oakum, and recaulk entire vessel to deck; remetal with yellow metal or copper; straighten and plumb vessel while on railway, putting in 2,172 feet timber at $1.00, putting in 3,901 feet planking at 60 cents, 820 feet ceiling at 20 cents."

At the prices fixed in the contract, these items amounted to $6,676.60. Under this contract, the libelant Pregnall regularly entered upon the work to be performed by him, and, after getting the steamer on the railway of his yard, and stripping her, it was found that her condition was much worse than had been anticipated, so much so that it was impracticable to go on with the work according to the contract; and thereupon, after conference with the libelant, the master of the steamer, the president of the respondent company, and the government inspector, other work was done, much of it to the hull of the steamer itself, not stipulated for in the contract, amounting to the sum of $2,539.17, made necessary by reason of the rotten, defective. and unsafe condition in which the same was found to be, in order to put said steamer in a proper and safe condition for service. No question was raised as to the performance of the work covered by the original contract, and the amount due thereon was fully paid, but the bill for the extra work was disputed as a whole, and the result was the filing of the libel herein; to which the respondents replied that all work set forth in the written contract had been fully paid for, and $308.35 in addition, and denied further liability, upon the ground that the extra work was not embraced in the written contract, and was not authorized. They further alleged that the work on libelant's part was unskillfully performed, and that there was delay in the completion of the same, whereby damage accrued to them in the sum of $2,200. No testimony was taken by claimant tending to maintain its defense, either as to the alleged unskillful manner in which the work was performed, or that there was any delay in its execution, and the case turned in the lower court solely upon the right of the libelant, under the circumstances, to recover for the

Digitized by Google

extra work done. The written contract contained a clause that no new work of any kind done on the steamer, and no work of any kind, should be considered as extra work unless a separate estimate in writing should be made for the same before its commencement, and submitted by the contractor to the respondent company, and the signature of the chairman of the board of directors obtained thereto. The learned judge in the court below, while recognizing that this clause might be waived by the parties, and that they, either by their acquiescence in what was being done, or ratification of what had been done, might make themselves liable for extra work, was, nevertheless, of opinion that there was not sufficient evidence in the record to sustain the contention that the respondent company had ever formally abrogated the written contract, or, in view of the said clause as to extra work, had ever authorized the libelant to do the work as charged for by him, or acquiesced in or ratified what he did so as to become liable therefor. With these conclusions we do not agree, and think, under the circumstances, the libelant is entitled to recover for the amount of the extra work performed by him. The decision of the trial court upon questions of fact, where the judge saw and heard the witnesses testify, might have great and controlling weight; but here, where the evidence was taken by an examiner, this court will more readily examine the same, and reach its own conclusions thereon. The Glendale, 26 C. C. A. 500, 81 Fed. 633, 635; Duncan v. Nicholls, 44 Fed. 302; The Ludvig Holberg, 43 Fed. 120; The Thomas Melville, 37 Fed. 271. But we do not regard this as a case depending upon conflicting evidence, or the credibility of witnesses, but rather upon the legal effect of what it is admitted was said and done by those acting for the respondent corporation under circumstances not disputed. That there was a necessity for the extra work is apparent from the whole evidence, and without the extra work it would have been entirely impracticable to have carried out the written contract at all. The claimant's witness Cherry, the master of the steamer, and superintendent placed in charge of the repairs, thus described the condition of the steamer after she was stripped:

"I did not think she was in very bad shape after we got her on the railway until we ripped the lining off, and it was all gone underneath. The timbers would look good on top, but were all gone underneath, like the shell of an egg."

He also stated, in answer to the question of whether he had not stated to Mr. Bird, the secretary of the company, that they would have to make a new hull:

"Yes, I told him in these words: That I thought it cheaper to pay Mr. Pregnall to cancel the obligation, and build a new hull. I thought it would be cheaper in the end."

The United States inspector of hulls, W. H. Cannon, testified as follows:

"Question. What did she show after she was stripped? Answer. Very bad. Timbers completely gone, except eight or ten under the engine. It was necessary for them all to come out except ten or twelve. Question. Did you see any decayed knees? Answer. Some I did not count. More were there, but, when I found that Capt. Cherry had a disposition to repair the boat, I did not interfere with him."

Digitized by Google

Witnesses Seth Ferrara and John F. Cummen, both shipwrights, and who worked upon the steamer while the repairs were being made, say that the main keelson, fore and aft, and various portions of the hull, were in a rotten and charred condition; that it was dry rot from the heat and dampness, and would not hold anything, and that it was knocked out with a mall; and that the steamer in her condition was utterly unseaworthy. The libelant S. J. Pregnall testified that he found her cross-beams nearly all rotten, the knees nearly all rotten, the keelson all rotten, the keelson under the boiler rotten, her plank sheers rotten, apron and deadwood rotten, stern posts defective, and, in short, that there was nine-tenths of her that had to be rebuilt, and that it was impossible for him to do the work covered by the agreement without renewing these rotten parts; that he could not fasten sound material to a rotten structure, and that there was nothing upon which to build. It is the controversy as to what occurred between the parties upon the discovery of this condition of the steamer, and was thereafter done, which gave rise to this litigation. Libelant's statement is that after he and Capt. Cherry, the master of the steamer, and superintendent of the work, consulted, they went down to see Mr. Witte, the president of the company, and told him that the steamer would have to be rebuilt; and, in answer to the question, "Did you describe the condition of affairs?" the libelant says:

"I did, and so did Captain Cherry. After consulting a time, he wanted to know if I could do the work in time to save the season. He then considered the costs of a new boat against rebuilding that one. I suggested that by taking out the machinery I could save four thousand or five thousand dollars. I did offer to build a new boat hull for $11,000.00. They decided then that I should go on make the old hull new. Mr. Witte told me, 'All right, go ahead.' I told him that I did not have means to do that much work. He said he would furnish me with means every week to pay men, which he did, and I went along with the work, and completed it."

Capt. Cherry's statement is, in substance, that he informed President Witte of the wretched condition of the steamer, his surprise as to its condition, and that the latter said: "I am sorry that we did not know it sooner. We will try to do the best we can." That he went and told Mr. Pregnall that the vessel would have to be ripped up, and rebuilt, or, rather, retimbered. In answer to the question of whether he understood, at the time he accompanied libelant to see President Witte, the latter authorized libelant to do any work he pleased outside of the contract, he replied, "No," and in reply to the specific question, "Did President Witte authorize Mr. Pregnall to do any work outside of the contract?" replied, "Not as I know."

President Witte's account is as follows:

"I remember it distinctly. Captain Cherry and Mr. Pregnall came down to the office, as they said that the vessel was not in as bad condition as represented by some people, making mention of some certain parties at the time, and that she could be repaired, and be a stronger and stouter vessel than before, with some other expression, stating that putting these keelsons on, and which were in the contract, the vessel would be stouter and better than ever before. The question of about how much it would cost to build a new hull came up in this way: As some people said it would be cheaper to build a new than repair the old, this was reported to me that such had been said, and I asked Mr. Pregnall how much he could build a new hull for. He said $11,000.00. I said, 'Well, I was told it could be done for $8,000 or $9,000.'

Digitized by Google

He said his price was $11,000.00. Q. Did you, in consequence of that conversation, say, 'All right; go ahead'? A. No; I told them after that that we concluded to go on with the contract. That was the result of the conversation, —and finish the vessel. * * * Q. When Captain Cherry reported to you on the first day that the vessel was worse than he thought, and that her condition was rotten, was it your desire to replace with sound all the rotten wood? A. Certainly; that was the object in repairing the vessel. Q. Did you express to Captain Cherry that desire and intention when he spoke to you of the rotten condition of the vessel? A. No. The understanding was that Captain Cherry should be present for the purpose of seeing what wood was rotten taken out, and no wood put back except such as was sound. Q. After this rotten condition of affairs was reported by Captain Cherry, was it your wish and intention, with the work that went on after that, that all the rotten wood should come out, and be replaced by sound wood? A. Certainly. * * * Q. What was the object of the work being done on the vessel? A. Repairing her. Q. What for? A. Making her seaworthy. Q. To run her as a passenger boat in June and July? A. Yes. Q. Were you not hurrying to get the boat for the 1st of June? A. It was desired to have the vessel ready by the specified time. Q. You intended to run the boat the 1st of June as a passenger boat, without taking all the rotten wood out, and replacing it by sound wood? A. Of course not. * * * Q. And further, in July, didn't you run the boat? A. I suppose that was the time. * * * Q. Did you care? A. As a matter of course I cared. If I had known there was rotten wood in there, I would have taken it out. * * * Q. Did you see any knees that were rotten? A. Oh, yes; I saw some ribs,—knees, I suppose they were. I don't know what you call a rib or what you call a knee. Q. Did you see any of the deck that was rotten? A. Yes, I saw a portion of it. Q. What did you say about those knees? A. Nothing in the world. What should I have said? * * * Q. What did you expect Mr. Pregnall to do in the event of his having extra work outside of the written contract? A. I expected him to take the chances whether we would pay him or not. Q. If he did it? A. Yes, of course. If he did any, he did it at his own risk. He certainly didn't do it with my consent."

It will be observed that this statement of President Witte is not a denial of what the libelant Pregnall stated. The question under consideration was between building a new hull or repairing an old one, and they both agree that the offer of $11,000 for the new hull was rejected, and Mr. Witte admits that he said, "Go on with the contract," which must have referred to repairing the old hull under its newly-discovered condition, and not to carrying out of the original contract of the 25th of February, 1897, to repair the steamer when the utter unseaworthiness of the hull was not known of. The execution of the written contract without change or modification on the part of libelant would have been impossible, and, so far as respondent is concerned, would have been to have done a vain and foolish thing, namely, to have expended nearly $7,000 in repairing a ship without a hull. Libelant swears that the agreement was to repair the old hull, and that was what he proceeded to do, and President Witte's action in appointing Capt. Cherry to superintend the taking out of the rotten wood and supplying it with sound instead sustains this idea.

W. M. Bird, one of the directors and secretary of the respondent company, and the libelant in the second of these causes, testifies that Capt. Cherry talked with him about building a new hull to the boat, and explained that he had talked with Mr. Witte, and that the latter had told him to go ahead, and do what work was necessary,—to repair the boat, and put her in thorough order. This was done after the foregoing interview between libelant Pregnall and President Witte. Work was immediately begun on the hull, under the direction

Digitized by Google

of Capt. Cherry as superintendent, who stayed at the work, and directed personally what rotten wood and timbers should be taken out and what work should be done, and how it should be done, until the steamer was completed; and, in the language of the United States inspector of hulls: "She was in first-class order. I never saw a boat in better. * * * I think she was better than when she was brought here in 1876. I think she had better timbers in her." While this work was being done, President Witte was frequently at the steamer, and saw for himself what was being done; the evidence being that he would drive down about once a week. His own superintendent, specially designated by him for the purpose of looking after the work, was there all the time. The secretary of the company and its superintendent, Mr. Armine Witte, were frequently there, as were also Messrs. Lapan and Thompson, two directors of the company. In all, six officers of the company, several of whom had full knowledge of all that was being done, and all of them abundant opportunity to see what was done, and they one and all stood by and allowed the work charged for to be done and services performed, and the respondent company acquiesced therein by weekly supplying, according to the contract, sums necessary to pay off the employés for the labor performed. Under these circumstances, the work, in our opinion, should be paid for, and it will not do for President Witte to say that the contractor "did the work at his own risk," and that "I expected him to take the chance of whether we would pay him or not." Under such circumstances the law implies a contract, and a promise to pay. It is not in dispute that the services were properly and seasonably rendered, and it is equally clear that the work was necessary; and to allow, under the circumstances, the respondent company to have the benefit of libelant's money and labor without compensation, would be grossly unjust and inequitable. When the president of the company, upon being told that the contract could not be performed, so as to make the steamer seaworthy, without replacing the rotten material discovered in her hull, directed Pregnall to go on with the contract, and had his superintendent overlook and direct the replacing of the rotten knees and timbers, Pregnall, from his words and conduct, had a right to understand that the president consented to his doing the necessary extra work, no matter what the president may have had in his mind, undisclosed to Pregnall, with regard to the effect of the contract.

In what we have said we have not been unmindful of the clause in the written contract as to the conditions on which extra work could be done. This clause is carefully worded, and is sweeping in its terms, but, nevertheless, in our opinion, can be and was waived by what took place between the parties. Authorities to show that such clauses can be waived by the subsequent acts and conduct of the parties are abundant. Wood v. City of Ft. Wayne, 119 U. S. 320, 321, 7 Sup. Ct. 219; West v. Platt, 127 Mass. 367, 372; O'Donnell v. Clinton, 145 Mass. 461, 463, 14 N. E. 747; Bartlett v. Stanchfield, 148 Mass. 394, 19 N. E. 549; Cunningham v. Fourth Baptist Church, 159 Pa. St. 620, 28 Atl. 490; Bowe v. U. S., 42 Fed. 777.

The contention made, or, rather, suggested, that the liability should

Digitized by Google

be escaped because the respondent is a corporation, and did not formally, by its board of directors, agree to the making of a new contract, or authorize, assent to, or acquiesce in the performance of the additional work in question, is equally without merit. Corporations only act by and through agents, and in Pittsburgh, C. & St. L. Ry. Co. v. Keokuk & H. Bridge Co., 131 U. S. 371–381, 9 Sup. Ct. 773, it is said:

"When a contract is made by any agent of a corporation in its behalf, and for a purpose authorized by its charter, and the corporation receives the benefit of the contract without objection, it may be presumed to have authorized or ratified the contract of its agent. Bank v. Patterson's Adm'r, 7 Cranch, 299; Bank v. Dandridge, 12 Wheat. 64; Zabriske v. Railroad Co., 23 How. 381; Gold-Min. Co. v. National Bank, 96 U. S. 640; Gas Co. v. Berry, 113 U. S. 322, 327, 5 Sup. Ct. 525. This doctrine was strongly stated by Mr. Justice Story, delivering the judgment of this court in each of the first two of the cases just cited."

The supreme court has passed upon this question in many instances. In Railroad Co. v. Howard, 7 Wall. 413, it is said:

"Corporations, as much as individuals, are bound to good faith and fair dealing, and the rule is well settled that they cannot, by their acts, representations, or silence, involve others in onerous engagements, and then turn round and disavow their acts, and defeat the just expectations which their own conduct has superinduced."

The second case involves the question of whether libelants William M. Bird & Co. have a lien under the statute of South Carolina, enforceable by libel in rem in a court of admiralty against the steamer for materials furnished the general contractor, Pregnall, in making the repairs aforesaid to the steamer. The learned judge of the court below was of opinion that such lien existed, and was enforceable in a court of admiralty by libel in rem against a domestic vessel for materials and supplies, maritime in their nature, such as were furnished in this case (The Planter, 7 Pet. 343; The Lottawanna, 21 Wall. 568; The J. E. Rumbell, 148 U. S. 1, 13 Sup. Ct. 498; The Kate, 164 U. S. 470, 17 Sup. Ct. 135; The Glide, 167 U. S. 610, 17 Sup. Ct. 930), but held that it was necessary to prove that the debt was contracted upon the credit of the steamer, and not of the owner or contractor making repairs; and, believing that the libelants' claim was not one incurred on the faith of the ship, dismissed the libel. With our view of the evidence, we deem it unnecessary to do more than pass upon the question of fact involved in this decision. Our conclusion upon the whole evidence is that the materials were furnished upon the credit of the steamer, and not to the contractor individually. The libelants so testify. Many of the articles were ordered by the master of the steamer, placed in charge of the work thereon by the respondent company, and the others by the respondent's general contractor, who was himself without credit; and there is no claim but that the supplies were furnished to, and used in the repair of, the steamer, and that they have not been paid for, either to the libelants, who furnished them, or to the general contractor, who used them in rebuilding respondent company's vessel. 1 Rev. St. S. C. § 2504, is very comprehensive in its terms, and a lien is expressly given to any person for labor performed, materials used, or labor and materials

Digitized by Google

furnished in the construction, launching, repairs of, or for provisions, stores, or other articles furnished for or on account of a ship or vessel by virtue of a contract, expressed or implied, with the owners of a ship or vessel, or with the agents, contractors, or subcontractors of such owners, or any of them, or with any person having been employed to construct, repair, or launch such ship, or to assist them. We think the libelants William M. Bird & Co. have a lien upon the steamer for the supplies so furnished and used in its construction.

For these reasons, the decrees appealed from are reversed, and the causes remanded to the lower court, with instructions to enter a decree therein in favor of the libelants in the second-named libel for the sum of $868, with interest at the rate of 6 per cent. per annum from the 22d day of May, 1897, until paid, with costs, and a like decree in favor of the libelant Samuel J. Pregnall for $1,184.37, with interest from May 22, 1897, until paid, with costs. Reversed.

(94 Fed. 582.)

COOPER et al. v. HILL.

(Circuit Court of Appeals, Eighth Circuit. May 9, 1899.)

No. 1,145.

1. LIMITATION OF ACTIONS—ACCRUAL OF CAUSE OF ACTION.
   A cause of action against the directors of a bank for fraudulently diverting its funds for their own benefit accrues as soon as the diversion is complete, in the absence of concealment of the facts on their part; and where such facts are shown upon the records of the bank, and become known to a cashier who succeeds the one involved in the transaction, and who has no interest in the matter adverse to the bank, his knowledge is notice to the bank.

2. NATIONAL BANKS—REPAIRS OF PROPERTY ACQUIRED—PERSONAL LIABILITY OF DIRECTORS.
   A national bank which has lawfully acquired the title to property in payment of a debt has implied authority to make reasonable repairs thereon for the purpose of putting it in salable condition, and its directors cannot be held personally liable for money so expended in good faith.

3. SAME—PROSECUTION OF OUTSIDE BUSINESS.
   A national bank, however, has no power to prosecute a mining business on property which it has acquired,—much less, to expend its funds in prospecting for mineral on such property; and directors who authorize such expenditure are personally liable therefor to the bank or its receiver.

4. SAME—SUIT AGAINST DIRECTORS—JURISDICTION OF EQUITY.
   A suit by the receiver of an insolvent national bank against its officers and directors to compel restitution of funds unlawfully diverted by them is one to execute a trust, and involves an accounting as to trust funds, and hence is of equitable cognizance.

5. SAME—JOINT LIABILITY.
   When a loss has been caused to a national bank by the appropriation of its funds to a purpose unauthorized by law, or by culpable negligence or conversion of its funds, the officers who participated in or consented to the act are jointly and severally liable for the entire amount.

6. SAME—FAILURE TO PROVE ALLEGATION OF FRAUD.
   A bill by the receiver of a national bank against its officers and directors for the unlawful diversion of funds of the bank is sufficient to support a recovery, when the diversion is proved, although a further allegation that

Digitized by Google

such diversion was fraudulent is not proved. The gravamen of the bill is the fact of unlawful diversion.

7. SAME—INTEREST.

When the directors and officers of a bank have misappropriated its funds, they are liable for interest on the amount from the date of the misappropriation, as damages; and no statute is necessary to authorize the allowance of such interest by a court of equity.

8. SAME—SUIT AGAINST DIRECTORS—LACHES.

The directors of a national bank are not trustees of an express trust, with respect to the property or funds of the bank, but of an implied or resulting trust created by the operation of the law upon their official relation to the bank; and the statute of limitations and the doctrine of laches may be invoked in their defense, when sued for a breach of such trust. Such an action is maintainable either at law or in equity, and a court of equity will follow the statute of limitations, unless unusual or extraordinary circumstances render its application inequitable in a particular case.

9. SAME.

The officers and directors of a national bank without authority of law used its funds in prospecting and attempting to develop mining property which had been acquired by the bank. Their action was not fraudulent, but was taken in good faith for the benefit of the bank, but resulted in the loss of the funds so diverted. They subsequently sold their interests in the bank, and retired from its management, leaving it solvent and prosperous. Under the new management it subsequently became insolvent, and its receiver brought a suit in equity against the former directors to recover the amount so diverted by them. Such suit was not brought until more than six years after the last of the expenditures in the mining venture had been made, which was the limit of time, under the statutes of the state, within which an action at law for the recovery of the money could be maintained; but subsequently, and within the six years, the defendants, as directors, had repaid to themselves from the funds of the bank certain advances made by them individually in aid of such venture. *Held*, that the court would follow the statute, and as to the amounts originally expended the suit was barred by laches, but was maintainable for the recovery of the amounts subsequently withdrawn without legal authority.

Appeal from the Circuit Court of the United States for the District of Colorado.

This is an appeal from a decree for the payment of the sum of $35,093.45, interest thereon, and costs, by John J. Reithmann, George Tritch, Job A. Cooper, D. C. Dodge, and John Good, to the appellee, Zeph. T. Hill, as receiver of the German National Bank of Denver, on account of the misappropriation of the funds of that bank in 1888 and 1889. All the parties against whom this decree was rendered have appealed to this court except Reithmann, who appears to be content with the result below. The decree rests upon this state of facts: In the years 1888 and 1889 Reithmann, Tritch, Cooper, Dodge, and Good were directors of the bank. Tritch was its president, and Cooper was its cashier. The bank had acquired the ownership of certain mining claims under an execution sale upon a judgment in its favor of about $4,500, and by virtue of certain conveyances which it had procured to be made to Cooper, its cashier, in an endeavor to collect its judgment. The legal title to this property was in Cooper, but he held it for the benefit of the bank. Upon the property was some mining machinery. A shaft had been sunk upon it more than 100 feet, and some drifts had been made from this shaft in an endeavor to discover and mine ore. But the former owners had abandoned the undertaking, the machinery was still, and the shaft and drifts were full of water. In February, 1888, the five directors of this bank against whom the decree below was rendered caused a corporation called the Cassandra Consolidated Mining Company to be organized for the purpose of acquiring, developing, and operating mines. They had the certificates of all the stock of this corporation, except a few qualifying shares which were written to its officers, written to themselves, on July 11, 1888, but they never took them out of the stock book of the company. On

Digitized by Google

July 12, 1888, Cooper made a deed of the mining property which he held for the bank to the Cassandra Company. The latter company procured money from the bank, and used it to pump water out of the mine, to sink the shaft deeper, and to prospect for ore, between February 1, 1888, and April 11, 1889, until it had used, in all, $20,864.82 of the funds of the bank. Upon the books of the bank this money, with the usual interest, was charged as an overdraft against the Cassandra Company. In June, 1888, this overdraft had become $6,800, and each of these five directors deposited $1,200 in the bank to the credit of the Cassandra Company, and thus diminished its apparent overdraft by the sum of $6,000. On October 26, 1889, this mining property had become worthless; and the board of directors on that day passed a resolution to the effect that it should be reconveyed to the bank, that the bank should refund to the five members of the board the $6,000 which they had deposited to the credit of the Cassandra Company, and that the bank should assume that company's overdraft. Pursuant to this resolution, Cooper, who claimed that his deed to the Cassandra Company had never been delivered, although it appeared upon the records of the county, made a deed of this property to John J. Reithmann, who had then acquired a controlling interest in the bank, for the benefit of the bank; and in December, 1889, the bank paid back to each of the five directors the $1,200 which he had deposited with the bank for the Cassandra Company in June or July, 1888. During all the time when these transactions were going on the bank was solvent and prosperous, and the appellants owned a majority of its stock, and controlled and managed it. The stock was selling in October, 1889, when the resolution to return this mining property to the bank was passed, at the rate of $325 for a share, which was of the par value of $100. About this time the appellants sold their stock in the bank, and the control and management of it was turned over to Reithmann and his friends. On July 6, 1894, the bank became insolvent, and the appellee, Hill, was appointed its receiver. This suit was commenced by this receiver on October 25, 1895. In his bill he alleged the facts we have stated, averred that the moneys of the bank used through the Cassandra Company were misappropriated and lost by the five directors in a futile attempt to develop and explore this mining property, and that this was done by them for their own benefit, and for the purpose of speculation. He alleged that the Cassandra Company was organized and owned by the five directors, that they caused the mining property to be conveyed to it, and that they intended to take the benefit of any advance in its value if paying ore was discovered and meant to charge the bank with any loss they sustained if their speculation was unfortunate. He alleged that their speculation was disastrous, and in pursuance of their intention they charged the bank with their loss, and escaped without harm. The appellants answered that the mining property was at all times owned by the bank, that the Cassandra Company was organized and operated by them in the interest of the bank, that the purpose of its organization was to form a conduit through which the mining property might be conveyed to a purchaser, and that this was done because they thought that the bank could realize more by a sale of the stock of the Cassandra Company as the owner of the mining property than it could by a direct sale of the property as the property of the bank. They alleged that in 1888 the mine was full of water, so that it could not be examined by a purchaser or sold; that they authorized the expenditure of the money used through the Cassandra Company for the purpose of pumping out the water, clearing out the shaft and drifts, and putting the property in presentable shape for examination, in the hope and belief that in that way they might secure a purchaser of it for the bank. They averred that they advanced the $6,000 which they deposited to the credit of the Cassandra Company in the summer of 1888 to the bank, as an accommodation to it, for the purpose of reducing the apparent overdraft of the Cassandra Company. It appeared at the trial that there were seven directors of this bank; that one Clinton, who prior to that time was the assistant cashier, succeeded Cooper as cashier of the bank in August, 1889, and held that office until September, 1893; that Cooper ceased to be a director of the bank on July 1, 1890; that Tritch ceased to be a member of the directory at the annual meeting in January, 1890; and that Dodge ceased to be a member on January 12, 1892. No complaint of the acts of the appellants was ever made until after the bank became insolvent under the management of their succes-

Digitized by Google

sors, nor until after a receiver was appointed for it in the year 1894. Upon this state of facts a decree was rendered in the court below against the five directors for the entire amount of money expended upon this mining property during the years 1888 and 1889, with interest from December 23d in the latter year.

Charles J. Hughes, Jr., for appellants.
John S. Macbeth, for appellee.

Before CALDWELL, SANBORN, and THAYER, Circuit Judges.

SANBORN, Circuit Judge, after stating the facts as above, delivered the opinion of the court.

The bill in this suit contains averments sufficient to warrant a recovery on the ground of an unauthorized use of the funds of the bank to prospect for and to develop a mine on its property, and also on the ground of a willful misappropriation of its funds for the use and benefit of the appellants. We dismiss the latter ground on the threshold of this discussion, because the evidence fails to satisfy us that any of the appellants ever intended to obtain any pecuniary advantage or to make any personal gain out of the transactions under consideration at the expense of the bank, and because, if they did, a suit against them for such a fraud was barred in three years from December 23, 1889, and this suit was not commenced until October 25, 1895. Mills' Ann. St. Colo. §§ 2911, 2909. The contention of the appellee that the cause of action for fraud is not barred by this statute, because the time under it does not commence to run until the discovery of the facts constituting the fraud, has been considered. But the salient facts of this case were spread upon the books of the bank. They were all known in October, 1889, to the cashier, Clinton, who succeeded Cooper when he made the record of the resolution for the reconveyance of the mining property; and Clinton had no interest in this matter adverse to the bank, and he was its chief officer and agent. Notice to him was notice to his principal, the bank. There was no concealment, no secrecy, no deceit, in the acts of the appellant; and the time, under this section of the statute, commenced to run when the diversion of the fund was complete. In this state of the facts the receiver and the creditors and stockholders of the bank, whom he represents, stand in its shoes. Their rights here are merely those of assignees of the bank, and as such they have acquired no cause of action which the bank did not have before the receiver was appointed.

The record discloses a case in which the president, the cashier, and the majority of the directors of a bank commenced to expend money upon an abandoned mining property which it owned for the purpose of preparing it for sale, in order that the bank might dispose of it and convert it into money. The shaft and the drifts upon the property were full of water. The machinery had been silent for months. The tools had been stolen, and others were necessary to place the machinery in successful operation. When a national bank has lawfully acquired real estate or other property, it may sell that property and convert it into money; and, in order to do

Digitized by Google

so, it may clean it, make reasonable repairs upon it, and put it in presentable condition to attract purchasers, in the same way that an individual of sound judgment and prudence would do if he desired to make a sale of the property. The authority to do these things is one of the incidental powers vested in the corporation under section 5136 of the Revised Statutes, which provides that a national bank shall have authority:

"Seventh. To exercise by its board of directors, or duly authorized officers or agents, subject to law, all such incidental powers as shall be necessary to carry on the business of banking by discounting and negotiating promissory notes, drafts, bills of exchange and other evidences of debt; by receiving deposits; by buying and selling exchange, coin and bullion; by loaning money on personal security; and by obtaining, issuing and circulating notes according to the provisions of this title."

The duty of exercising this power is imposed upon the directors and officers of such a bank, and the authority to determine in the first instance when and to what extent it shall be exercised is necessarily intrusted to their judgment. Moreover, they cannot escape the discharge of this duty. They are bound to consider and decide the question at their peril. It follows that, when they have honestly and carefully considered and decided it, they ought not to suffer because, in the light of subsequent events, which could not be foreseen, it turns out that their decision was unfortunate. This mining property was unsalable with the shaft and drifts filled with water, the machinery silent, and the tools gone. It is common knowledge that a mine or a prospect for a mine is much more likely to find a purchaser, and much more likely to realize a fair price, when work is in active progress upon it, than when it is still and desolate. The officers of this bank decided to pump the water out of the shaft and drifts of this property, to put it in condition in which it could be examined by a purchaser, to start the machinery, and to do all this in the hope that by so doing they might find a purchaser for property that was unproductive and worthless in its then condition. An examination of the evidence discloses the fact that the necessary expense of placing this property in condition for examination and sale was at least $1,000, and perhaps $2,000. The directors failed to find a purchaser for the property, and the bank lost this money. But in view of the fact that the management and sale of the property was intrusted to their discretion, and that the burden of deciding whether or not this expenditure should be made was imposed upon them, we are unwilling to say that their action in expending $2,000 for this purpose was either unauthorized, wrongful, or culpably negligent. We are of the opinion that an expenditure of this amount may be said to have been properly made in the honest exercise of a discretion vested in them, and that they ought not to be personally liable because the use of this money did not secure the purchaser they sought and expected to obtain. The unfortunate part of this case is that they did not stop here. When the shaft had been cleared of water and the machinery had been put in operation, when the property was in proper condition for examination and for sale, and

Digitized by Google

when no purchaser was found, they proceeded to expend $18,864.82 more in prospecting for paying ore upon property in which none has ever been discovered. It was not only beyond their authority as officers of the bank, but ultra vires of the bank itself, to carry on ordinary mining, manufacturing, or trading business,—much more, to expend its money in such a speculative venture as prospecting for ore where none of value ever had been found. The statutes of the United States are the measure of the powers of national banks, and these corporations can lawfully exercise none but those there expressly granted, and those fairly incidental thereto. Omaha Bridge Cases, 10 U. S. App. 98, 174, 2 C. C. A. 174, 230, and 51 Fed. 309, 316; Bank v. Townsend, 139 U. S. 67, 73, 11 Sup. Ct. 496; Bank v. Kennedy, 167 U. S. 362, 366, 17 Sup. Ct. 831; Bank v. Smith's Ex'r, 40 U. S. App. 690, 704, 23 C. C. A. 80, 87, and 77 Fed. 129, 137. The officers of these banks are bound to know they are charged by the law with the knowledge of the extent and limitations of the powers of the corporations for which they act, and of their own authority as the agents of these corporations. It is said that they are not technically trustees of express trusts, but they are the agents of the bank, charged, under the national banking laws, with an implied trust to use the funds of the bank for the purposes specified in these laws, only, and to preserve them for their creditors and stockholders. Every agent incurs a personal liability to his principal for losses occasioned by his unauthorized acts under the general law, and the officers of corporations are no exception to the rule. Upon this principle the directors and the other officers of a national bank become personally liable to the bank and its successor in interest, its receiver, for losses caused by their use of its funds for unauthorized purposes, as well as for culpable negligence in their use and for their fraudulent appropriation. Williams v. McKay, 40 N. J. Eq. 189, 200; Mor. Corp. §§ 555, 556; Bank v. Wilcox, 60 Cal. 126, 141.

It is insisted, however, that there can be no recovery of the appellants in this suit on account of the diversion of the funds of this bank to the business of prospecting for ore upon its property (1) because there is a complete remedy for the appellee at law, and therefore there is no jurisdiction of this suit in equity; (2) because the liability of the appellants is several, and not joint; (3) because the appellee pleaded that the appellants fraudulently misappropriated this money for their own benefit; and (4) because the suit is barred by the statute of limitations and by laches. We will consider these objections in their order.

1. This is a suit to compel the restoration to a trust fund of $20,864.82 which the appellants unlawfully diverted from that fund, and it involves an accounting of the money diverted between the receiver and the appellants. It is therefore a suit against officers of a bank to execute a trust and to compel an accounting, and it avoids a multiplicity of suits at law. This court has repeatedly held, for reasons which now seem to us obvious, and which are stated at length in our opinions, that equity has jurisdiction of such a suit. Hayden v. Thompson, 36 U. S. App. 362, 367,

Digitized by Google

17 C. C. A. 592, 594, and 71 Fed. 60, 62; Cockrill v. Cooper, 57 U. S. App. 576, 29 C. C. A. 529, 535, 538, and 86 Fed. 7, 12, 16.

2. Are the appellants jointly liable for the misappropriation? All the appellants knew of the misappropriation while this diversion was going on. Some of them directed, and all of them consented to, it. No objection or protest or endeavor to prevent or stop it was made by any of them, and, when the amount used reached $6,800, each of them contributed $1,200 to replace a portion of the misappropriated money, and subsequently reimbursed himself for this contribution out of the funds of the bank. Each of these officers was therefore at fault, and hence liable for the entire amount diverted. When a loss has been caused by the appropriation of the funds of a corporation to a purpose unauthorized by its charter, or by culpable negligence, or by a conversion of its funds, all the officers of the corporation who are chargeable with the fault which has occasioned the loss are liable for the entire misappropriation, without regard to the degree of dereliction of which each is guilty. 2 Lewin, Trusts, p. 1220; Williams v. McKay, 46 N. J. Eq. 25, 39, 18 Atl. 824. The appellants cannot escape here on the ground that each is separately liable for the amount which he misappropriated only, because they are all both jointly and separately liable for the entire amount diverted.

3. Must the decree be reversed because the appellee pleaded that the diversion was made with a fraudulent intent? The facts set forth in the bill are ample to warrant a recovery for the unauthorized use and loss by the appellants of the money in question in the business of prospecting for ore on the property of the bank, and these facts have been proved. But the bill contains other allegations to the effect that the appellants used and lost this money fraudulently, with the intent to get gain for themselves by causing the property on which it was expended to be conveyed to the Cassandra Company for the purpose of subsequently selling it at a profit for their individual benefit if paying ore was discovered, while they meant to saddle the loss upon the bank if the speculation proved disastrous. The appellee failed to prove these averments of fraud, and it is contended that this failure is fatal to a recovery on any ground under this bill. But the gravamen of the bill was the wrongful diversion of the trust fund. If the cause of action for the fraudulent diversion of the fund to the purpose of prospecting on this mining property for their own benefit were inconsistent with the cause of action for its diversion for the unauthorized purpose of prospecting upon it for the benefit of the bank, this objection of the appellants might be worthy of consideration. But there is no inconsistency between these two causes of action as they are stated in the bill. On the other hand, the latter cause necessarily inheres in the former, and warrants the same relief. The effect of the bill is to plead the unlawful diversion of the fund by the appellants, and then to plead that it was diverted with a fraudulent intent. If the fund was diverted to the unauthorized purpose, the cause of action was complete, whether the officers intended to appropriate the expected benefit of the speculation to their own use, or to give it to the bank, and a complainant is entitled to any

Digitized by Google

relief which the facts that he pleads in his bill and establishes on the trial justify. When the ultimate facts requisite to entitle him to the relief he prays are pleaded and proved, he cannot be defeated because he also pleaded other facts not essential to his recovery, which he did not prove. Espey v. Lake, 10 Hare, 260, 264.

Another objection to the decree is that the court below allowed interest on the amount misappropriated, and it is contended that this was erroneous, because this case does not fall among those in which interest is expressly allowed by the statutes of Colorado (Mills' Ann. St. § 2252). But this is a suit in equity, and no statute is necessary to give a court of equity power to allow interest on moneys unjustly detained or misappropriated. When interest is reserved in a contract, or is implied from the nature of the promise, it becomes a part of the debt, and is recoverable as of right. When money has been misappropriated or converted to his own use by a defendant, interest is given as damages to compensate the complainant for the loss of the use of his funds. In cases of the latter class, its allowance is sometimes a matter of discretion; but it is a general rule, both at law and in equity, that, whenever one has wrongfully detained or misappropriated the moneys of another, he must pay interest at the legal rate from the date of the misappropriation or from the beginning of the detention. Swinisen v. Scawen, 1 Dickens, 117; Redfield v. Iron Co., 110 U. S. 174, 176, 3 Sup. Ct. 570; United States v. North Carolina, 136 U. S. 211, 218, 10 Sup. Ct. 920; Jourolmon v. Ewing, 47 U. S. App. 679, 686, 26 C. C. A. 23, 27, and 80 Fed. 604, 607; Filmore v. Reithman, 6 Colo. 120, 131; 1 Sedg. Dam. §§ 301, 303.

4. Finally it is claimed that this cause of action is barred by the statute of limitations and by laches, and sections 2900, 2909, 2911, and 2912 of Mills' Annotated Statutes of Colorado are invoked to sustain this contention. Section 2900 provides that all actions of assumpsit or on the case, founded on any contract or liability, express or implied, shall be commenced within six years next after the cause of action shall accrue, and not afterwards. Section 2909 declares that, in cases of concurrent jurisdiction in the courts of common law and the courts of equity, the same limitations shall apply to suits in equity and to actions at law. Section 2911 limits the time for the commencement of suits for relief on the ground of fraud to three years after the discovery of the facts constituting the fraud. Section 2912 provides that bills of relief, in case of the existence of a trust not cognizable by the courts of common law, shall be filed within five years after the cause of action accrues, and not later. The last section does not govern the cause of action here in suit, because that cause is based on the disregard of their powers by the agents and implied trustees of a corporation, and this cause of action, as well as the trust relation from which it springs, is cognizable at law as well as in equity. It does not fall under section 2911, because fraud was not essential to its maintenance and was not proved, and the decree stands upon the simple diversion of the funds of the bank to an unauthorized purpose. It rests on the implied liability created under the law by the relation of the appellants, as its offi-

Digitized by Google

cers, to the bank. Why does it not fall under section 2900? The appropriate action at law to enforce the implied liability upon which it rests is an action on the case, and this section provides that the time for the commencement of such an action is limited to six years from the time when its cause accrued. The conclusion is inevitable that an action at law for the cause upon which this decree is based would have been governed by section 2900, and could not have been maintained six years after its cause accrued. The natural result of this conclusion is that this suit ought to be governed by the same rule, both on the ground that courts of equity usually apply the doctrine of laches in analogy to the statute of limitations relative to actions at law of like character, and on the ground that section 2909, supra, expressly requires it to be so applied.

The appellee endeavors to escape from this limitation on the ground that these appellants were trustees of an express trust, and that consequently no time runs in their favor. It must be conceded that express trusts are not within the statute of limitations, because the possession of the trustee is presumed to be the possession of the cestui que trust. But lapse of time is a complete bar to a constructive or implied trust, both in equity and at law, unless there has been a fraudulent concealment of the cause of action, or other extraordinary circumstances which make the application of the doctrine of laches inequitable. Hayden v. Thompson, 36 U. S. App. 362, 377, 17 C. C. A. 592, 601, and 71 Fed. 60, 69. The question presented then is, are the officers of a national bank the trustees of an express trust for its creditors and stockholders, within the meaning of this rule? They are not parties or privies to any express contract or agreement to hold and use the funds of the bank for the purposes prescribed by the acts of congress. They are not parties or privies to any express declaration of trust or agreement with the stockholders or creditors of their bank which sets forth the terms on which they hold its funds for their benefit. They are the mere agents of the bank to discharge the duties imposed upon it and upon them by the law of its being, by the statutes of the United States, and the common law of the land. Their liability arises from no express agreement, but from their violation of their duties as such agents. They unquestionably stand in a fiduciary relation to the bank, to its stockholders, and its creditors, and they hold its assets in trust for these beneficiaries. But there is no express agreement or declaration of this trust to be found, and they cannot be truthfully said to be trustees of an express trust. The trust with which the property of the bank is impressed in their hands arises from the law, and from their acceptance of the office they hold. It is not an express trust arising from contract or privity, but an implied or resulting trust created by the operation of the law upon their official relation to the bank. The result is that the officers of a national bank are not the trustees of an express, but of an implied, trust for the bank and its stockholders and creditors, and statutes of limitation and the doctrine of laches may be invoked in their defense. Hayden v. Thompson, supra; Briggs v. Spaulding, 141 U. S. 132, 147, 11 Sup. Ct. 924; Mor. Corp. § 516; Spering's Appeal, 71 Pa. St. 11; Hughes v. Brown,

Digitized by Google

88 Tenn. 578, 13 S. W. 286; Wallace v. Bank, 89 Tenn. 630, 15 S. W. 448. The controversy thus narrows itself to this question: Has the bank or its receiver been guilty of such laches that they ought not to be permitted to maintain this action? Ordinarily laches runs pari passu with the statute of limitations. If the latter has barred the analogous action at law, laches has stayed the corresponding suit in equity. But if unusual conditions or extraordinary circumstances make it inequitable to allow the prosecution of a suit after a briefer, or to forbid its maintenance after a longer, period than that fixed by the statute, the chancellor will not be bound by the statute, but will determine the extraordinary case in accordance with the equities which condition it. Kelley v. Boettcher, 56 U. S. App. 363, 375, 29 C. C. A. 14, 21, and 85 Fed. 55, 62. If the acts of the appellants upon which this suit is founded had been parts of a continuous and persistent course of action which had wrecked this bank and robbed its creditors and stockholders, if they had been accompanied with intentional misrepresentations, if they had been purposely or negligently concealed from the other officers and employés of the bank or from its stockholders and creditors, these facts might well induce a court of equity to permit this suit to be maintained notwithstanding the statute. The case at bar presents a very different state of facts. When this money was diverted the bank was solvent and prosperous. Its management by the appellants appears to have been beneficial and successful. Its stock was selling at $325 per share of the par value of $100. The appellants sold their stock and turned over the control of the bank to others. The diversion and use of this money appeared on the books of the bank, and was known to the cashier, Clinton, who succeeded Cooper, as early as August, 1889. The bank continued in business until 1894. No complaint of the acts of the appellants was made until after its failure, and no suit was instituted until October 25, 1895. There is certainly nothing in this state of facts to warrant a refusal to permit the doctrine of laches to have its accustomed effect; nothing to induce us to suspend its application at the end of six years after the cause of action accrued when the statute of Colorado barred the analogous action at law at that time. The bank and the receiver were too late to maintain this action at the expiration of six years from the time its cause accrued.

An application of the principles and rules that have been considered will quickly dispose of this case. The appellants commenced to use the funds of the bank to clear out the shaft and prepare the property in question for sale in February, 1888. They began to divert the moneys of the bank to prospect for ore at some time before July 1, 1888; for at that date they had used $6,800 upon this property, when only $2,000 was necessary to make it presentable to purchasers. They completed their misappropriation of the moneys on April 10, 1889. The wrong was then done, the cause of action was complete, and the statute of limitations and laches would have prevented the maintenance of any suit upon it which was commenced more than six years after that date, if the operations of the appellants had stopped here. Unfortunately for the appellants, they did not. In

Digitized by Google

June or July, 1888, they and Reithmann had refunded to the bank $6,000 of the $6,800 which had then been expended on the mining property, and on or about December 23, 1889, they caused the bank to repay to them this $6,000. We have already held that they were authorized to expend $2,000 to put this property in salable condition, and as this $2,000 was refunded to the bank, in the $6,000 paid to it by them in the summer of 1888, they were entitled to a return of this money in December, 1889. To that extent the repayment in that month may be sustained. But $4,000 of the $6,000 which they then received was repaid to them on account of money which they had wrongfully diverted from the funds of the bank, and for which they were personally liable. The bank did not owe them this $4,000, and they took it from its funds without lawful authority, and in violation of their trust. All their other misappropriations were made more than six years before the commencement of this suit, and their recovery is barred by laches. But this was within the six years, and the appellee is entitled to a decree for its recovery. The decree below is accordingly reversed, and the case is remanded to the court below, with instructions to enter a decree in favor of the appellee and against the appellants for the recovery of $4,000, and interest from December 23, 1889.

(94 Fed. 605.)

STATE NAT. BANK OF FT. WORTH, TEX., v. SMITH.

(Circuit Court of Appeals, Fifth Circuit. May 23, 1899.)

No. 794.

1. TRIAL—FINDINGS OF FACT—REQUISITES.

   Where a jury is waived by a stipulation in writing, in a circuit court, in an action at law, the court cannot be required to make special findings of fact, but may make either a special or general finding, and should not make both. Such finding must state the ultimate facts of the case, and not be a recital of evidential facts or circumstances which may tend to prove the ultimate facts, or from which they may be inferred.

2. REVIEW—FINDINGS OF FACT.

   As to the weight and effect of the evidence, the finding of a circuit court, where a jury is waived by stipulation in writing, is as conclusive on a writ of error as the verdict of a jury.

In Error to the Circuit Court of the United States for the Northern District of Texas.

This action was brought by John P. Smith, receiver of the City National Bank of Ft. Worth, Tex., to recover of the State National Bank of Ft. Worth and John C. Harrison the sum of $6,000 and 10 per cent. interest per annum thereon from July 10, 1896. The petition alleged, in substance, that the State National Bank of Ft. Worth was, at the date of the failure of the City National Bank, the legal and equitable owner and holder of 60 shares of the capital stock of said bank; that said City National Bank became insolvent on the 4th day of April, 1895, and on said date a national bank examiner, by order of the comptroller of the currency of the United States, took charge of the bank; that defendant in error, John P. Smith, was appointed receiver of said insolvent bank on the 12th day of April, 1895; that on the 10th day of July, 1896, the comptroller of the currency made an assessment on the

Digitized by Google

shareholders of said bank of $100 per share for each and every share of the capital stock held and owned by them respectively at the time of its failure; that said 60 shares of stock were issued to said John C. Harrison, as trustee, in two certificates, of date, respectively, June 28 and November 2, 1894, numbered 86c, for 50 shares, and 96c, for 10 shares; that said stock was so issued to said Harrison for the use, benefit, and advantage of said State National Bank, plaintiff in error, and he took the same in his name, as trustee for said bank; and that all said stock and certificates for same appeared on the books of the City National Bank in the name of John C. Harrison, trustee. The petition contained all proper allegations to entitle plaintiff to a recovery against the State National Bank if the ownership of the stock was as alleged in it at the date of the failure of the other bank. The defendants in the court below, John C. Harrison and the State National Bank, by their answer, denied ownership of the stock mentioned, and alleged substantially that 50 shares of the same were pledged to the bank by one Garner as security for a debt owing by him to it, and that the other 10 shares were pledged to it by A. W. and H. C. Caswell to secure a debt owing by them to the bank; that said stock, as well as the dividends arising therefrom, were pledged to the bank, and that, to protect it and the City National Bank against conflicting claims of other creditors of said pledgors, new certificates of said stock were issued to John C. Harrison, trustee, respectively on June 28, 1894, and November 2, 1894; that said stock, since said dates, has appeared on the books of the City National Bank in the name of John C. Harrison, trustee, and has never at any time appeared in the name of the State National Bank; and that the State National Bank at no time became the owner of any of said shares of stock, and never had any interest in the same, except as pledgee to secure said debts. On the trial, the parties, by agreement in writing, waived a jury, and the cause was submitted to the court without a jury. October 15, 1898, a judgment was rendered for plaintiff against the State National Bank of Ft. Worth for the sum of $6,815 and costs of suit, and in favor of defendant John C. Harrison that plaintiff take nothing as to him, and that he go hence without day, and recover his costs. After the rendition of the judgment, the defendant below moved the court to find a special verdict as to the facts proved on the trial of said cause which are material to the issue raised by the pleadings, and to find a certain conclusion of law in favor of the defendant. This motion appears to have been granted so far as it sought to have a special verdict on the facts proven on the trial of said cause prepared and filed, and also so far as it sought to have the court find its conclusions of law. Thereafter there is in the record, of date October —, 1898, the following, entitled "Special Findings of Fact":

"First. It was admitted on the trial of this case: That the City National Bank is a national bank, chartered under the laws of the United States. That the bank became insolvent on the 4th day of April, 1895, closed its doors, and ceased to transact business. It passed into the hands of a bank examiner on the 5th day of April, 1895, at which time John P. Smith was appointed receiver. That he qualified as such receiver, and is acting in that capacity, under appointment from the comptroller of the currency of the United States. That the comptroller of the currency of the United States on the 10th day of July, 1896, made an assessment of 100 cents on the dollar of the entire capital stock of the City National Bank of $300,000. That demand has been made by the plaintiff receiver in this case upon the defendant for payment of $100 per share on the stock in litigation, amounting to $6,000. That said demand was made on the 10th day of July, 1896, and that payment has been refused.

"Second. The two certificates of the capital stock of the City National Bank sued on in this case are (1) No. 96, Series C, for ten shares issued to John C. Harrison, trustee, on the 2d day of November, 1894, signed by John C. McCarthy, president, and Max Elser, cashier. On the reverse side of this certificate is indorsed, 'For value received, assigned and transferred to Warren Coleman.' This transfer bears date April 4, 1895, and is signed by John C. Harrison, trustee. Both of said certificates of stock were left with John C. McCarthy, president of the City National Bank of Ft. Worth, on the 4th day of April, 1895, in an envelope, on which was indorsed the following: 'The property of John C. Harrison, trustee. Left at 5:30 o'clock p. m., April 4,

Digitized by Google

1895, for transfer.' It was admitted on the trial of the case that the sale to Warren Coleman was a sham sale, and was in no way relied upon by the defendant, and that Coleman was a negro porter of the State National Bank, and insolvent, at the time of the sale; that he paid to John C. Harrison, cashier of the State National Bank, $10 for the said stock, which said $10 was returned by the said John C. Harrison, cashier of the State National Bank, on the morning of the 5th of April, 1895.

"Third. On or about the—— day of August, 1893, the State National Bank loaned to Dan Garner $5,000, taking as security therefor his note for that sum, and also, as collateral security, 50 shares of the capital stock of the City National Bank of Ft. Worth.

"Fourth. On or about the——day of November, 1893, the State National Bank loaned to Caswell Bros. the sum of $1,300, and took the note of said firm for that amount, and also, as collateral security, 10 shares of the capital stock of the City National Bank of Ft. Worth, Texas.

"Fifth. Both of said notes gave full power and authority to the State National Bank to sell at public or private sale, at the option of said bank or its assigns, with the right to become the purchaser at such public or private sale of the collateral attached thereto, which is 60 shares of the capital stock of the City National Bank of Ft. Worth, heretofore described, on the nonpayment of said notes, without advertisement or notice, and, after deducting the legal costs of said sale and delivery, to apply the residue of such sale or sales to the payment of said notes.

"Sixth. While the evidence as to whether or not there was a sale and purchase of said stock is conflicting, I find as a matter of fact there was a sale of said stock under the authority conferred by said notes. The said State National Bank, on or about the 28th day of June, 1894, sold and became purchaser of the stock of the City National Bank of Ft. Worth, known as the 'Lee and Garner stock,' and on or about the 2d day of November, 1894, sold and became purchaser of the stock known as the 'Caswell stock,' and thereby the said State National Bank became the owner of the same, and caused new stock to be issued for it on the above dates in the name of John C. Harrison, trustee; and after said dates said stock was credited upon the books of said State National Bank as an asset of said bank, and was so reported on March 5, 1895, in its sworn report to the comptroller of the currency of the United States, required by law to be made to the comptroller of the currency of the United States.

"Seventh. At the close of business of the City National Bank of Ft. Worth on the 4th day of April, 1895, both of said certificates of stock sued on stood on the books of said bank in the name of John C. Harrison, trustee. I find that John C. Harrison, trustee, was trustee for the State National Bank of Ft. Worth, and both of said certificates of stock were then and now owned by the State National Bank of Ft. Worth, Texas.

"Eighth. The defendant introduced in evidence a note dated on or about the —— day of July, 1894, signed by C. E. Lee and W. A. Garner, which note recited that the 50 shares of stock of the City National Bank of Ft. Worth were placed as collateral to secure this note. On the back of this note of Lee and Garner there was an indorsement of interest paid on same up to October 1, 1894, and there was a credit on said note of $10.23, dated July 14, 1894, and a credit of $164 was entered on the back of said note on the 10th day of September, 1894. The amount of this note was the same as the amount of the Dan Garner note, which was dated the —— day of August, 1893; and while I do not find that the interest was paid on the Lee and Garner note up to October 1, 1894, I do find that no interest was paid on said note after that date. The State National Bank still has possession of this note.

"Ninth. The defendant offered in evidence a note dated November 22, 1893, signed by Caswell Bros., upon which there is indorsed a credit of $50, dated April 4, 1894, and indorsed on back, 'Interest paid to August 1st, 1894;' and while I do not find that interest was paid on this note to August 1, 1894, I do find that no interest was paid on said note after that date. The State National Bank still has possession of this note.

"Tenth. The 50 shares of stock deposited as collateral security for the Dan Garner note stood on the books of the City National Bank in the name of Lee

Digitized by Google

and Garner until the 28th day of June, 1894, when new stock was issued for same to John C. Harrison as trustee, and the same stood on the books of the bank in his name as trustee up to the date of the failure of the City National Bank.

"Eleventh. On the 28th day of June, 1894, John C. Harrison, cashier of the State National Bank, and being the same party in whose name as trustee said certificates of stock stood, made a written statement to the City National Bank of Ft. Worth, Texas (said written statement being made on the letter head of the State National Bank), to the effect that the State National Bank had become the purchaser and owner of the said 50 shares of stock deposited as collateral security by Dan Garner, and said written statement was attached, and still remains attached, to the stub of the stock book of the City National Bank, and is as follows:

" 'Fort Worth, Texas, June 28, 1894.

" 'Max Elser, Esq., Cashier, City National Bank, Fort Worth, Texas—Dear Sir: This is to certify that we have sold, and become purchaser thereof (ourselves), 50 shares of the capital stock of the City National Bank of Fort Worth, Texas, being certificates Nos. 17, 18, 246, and 247, for 5, 5, 10, and 30 shares in the name of Dan Garner and L. R. Garner.

" 'Respectfully, [Signed] John C. Harrison, Cashier.

" 'P. S. Said stock held by us as collateral to loan originally made on or about September 1st, 1893.'

"Twelfth. The ten shares of stock deposited by Caswell Bros. stood on the books of the City National Bank at the time of the failure of said bank in the name of John C. Harrison, trustee, and John C. Harrison was then and there trustee for the State National Bank, and said stock then belonged, and now belongs, to the State National Bank.

"Thirteenth. On and after June 28, 1894, John C. Harrison, cashier of the State National Bank, stated to the officers of the City National Bank that it (the State National Bank) was the owner of the stock in litigation in this cause, amounting to $6,000, and same was treated by the officers of the City National Bank as the property of the State National Bank from said 28th day of June, 1894, to the time of the failure of the said City National Bank.

"Fourteenth. The State National Bank, on a book called the 'Blotter,' of said bank (said book covering a period from June 23, 1894, to June 17, 1896), on pages 660 and 661, charged the Lee and Garner note for $4,967.42 and the Caswell Bros.' note for $1,300 to profit and loss, and on page 661 there is an entry showing the State National to have acquired 50 shares of stock of the City National Bank for $5,000, and ten shares of the stock of the City National Bank for $1,000; making a total of $6,000. On the general ledger of the State National Bank, under the head of 'Securities, Mortgages, Claims,' etc., there is an entry dated December 31, 1894, referring to the aforesaid entry on pages 660 and 661 of said 'blotter,' relative to the $6,000 of stock acquired as aforesaid, and on the books of the bank before mentioned the said stock of the said City National Bank, amounting to $6,000, stands as the property of the said State National Bank, and as an asset of the bank.

"Fifteenth. On April 5, 1895, securities, stocks, bonds, mortgages, etc., accounts on the books of the State National Bank is credited with 60 shares sold to Warren Coleman for $6,000, and a corresponding entry on page 261 of said book, on April 5, 1895, profit and loss is debited with 'loss of City National Bank stock, $6,000.'

"Sixteenth. On the 31st of December, 1894, the directors of the State National Bank, at a regular meeting of the board, adopted the following resolutions, to wit: 'It was also agreed that there should be charged to other stocks, bonds, and mortgages, 60 shares of the City National Bank of Ft. Worth stock, having to take same in payment of Garner and Lee note for $5,000, and A. W. Caswell's note for $1,300, to hold same in trust to secure said notes.' I find that the words 'to hold same in trust to secure said notes' are interlined in said minutes of said directors' meeting containing said resolutions. I find that said minutes are in the handwriting of said John C. Harrison, cashier, and that said interlineation is in the same handwriting.

"Edward R. Meek, U. S. District Judge."

Digitized by Google

And then follow conclusions of law, to wit:

"I find that the plaintiff, John P. Smith, receiver of the City National Bank, should recover of the State National Bank the amount of the assessment on said stock, together with six per cent. interest from the 10th day of July, 1896, and all costs of suit. I further find that the amount of the judgment plaintiff should recover of the defendant, the State National Bank, including interest, is the sum of $6,815, and that this judgment bear interest at the rate of six per cent. per annum from this date, together with all costs in this behalf. I further find that the plaintiff take nothing against the defendant John C. Harrison, and that said defendant go hence without day, and recover his costs in this behalf expended. Edward R. Meek, U. S. District Judge."

There are six assignments of error relating to the alleged findings of the court, and generally contending that they are inconsistent, conflicting, and do not support the judgment rendered.

W. P. McLean and D. W. Humphreys, for plaintiff in error.

T. F. West, for defendant in error.

Before PARDEE, McCORMICK, and SHELBY, Circuit Judges.

Having stated the facts, the opinion of the court was delivered by PARDEE, Circuit Judge.

This is not a case where, a jury having been waived, the court proceeded to make a special finding of facts, and then rendered judgment thereon, but rather a case where the court proceeded to make a general finding, and rendered judgment thereon, and thereafter—possibly during the term—allowed to be prepared, found, and filed special findings as to the facts proven on the trial of the case. We have had occasion to hold that in an action at law, where a jury is waived by stipulation in writing, the court cannot be required to make a special finding of facts, but may make a general finding. Key West v. Baer, 30 U. S. App. 140, 13 C. C. A. 572, and 66 Fed. 440. It is irregular, in such cases, for the court to make both a general and a special finding of facts, unless the same be done at one time, and in such a way that the conclusion necessarily follows that the general finding is based upon the special facts found. In fact, the supreme court, in British Queen Min. Co. v. Baker Silver-Min. Co., 139 U. S. 222, 11 Sup. Ct. 523, held that the finding must be either general or special, and cannot be both. The special findings prepared and filed are made up of recitals of admissions, recitals of evidence, findings of preliminary evidential facts, and findings of ultimate facts.

In Raimond v. Terrebonne Parish, 132 U. S. 192, 10 Sup. Ct. 57, it is held, citing authorities, that:

"By the settled construction of the acts of congress defining the appellate jurisdiction of this court, either a statement of facts by the parties or a finding of facts by the circuit court is strictly analogous to a special verdict, and must state the ultimate facts of the case, presenting questions of law only, and not be a recital of evidence, or of circumstances which may tend to prove the ultimate facts, or from which they may be inferred. Burr v. Navigation Co., 1 Wall. 99; Norris v. Jackson, 9 Wall. 125; Martinton v. Fairbanks, 112 U. S. 670, 5 Sup. Ct. 321."

In Moller v. U. S., 13 U. S. App. 472, 480, 6 C. C. A. 459, 464, and 57 Fed. 490, 495, this court, in dealing with an alleged finding of facts, took occasion to advise the bar as follows:

"The bill of exceptions, which purports to be a finding of facts, is nothing more than a recapitulation of conflicting evidence, where, as recited therein,

Digitized by Google

some witnesses testified one way and others testified directly to the contrary. It is neither a statement of facts by the parties nor a finding of facts by the court. Raimond v. Terrebonne Parish, 132 U. S. 192, 10 Sup. Ct. 57; Glenn v. Fant, 134 U. S. 398, 10 Sup. Ct. 583; Davenport v. Paris, 136 U. S. 580, 10 Sup. Ct. 1064; British Queen Min. Co. v. Baker Silver-Min. Co., 139 U. S. 222, 11 Sup. Ct. 523. We suggest to the members of the bar in this circuit that an examination of these last-cited cases will be advantageous if hereafter, in common-law cases, they should desire to bring facts to this court for review."

An examination of the special findings shows that the evidence and the preliminary facts found are somewhat conflicting, but the weight thereof preponderates in favor of the correctness of the ultimate facts found. On writ of error we are not permitted to examine the evidence to determine its force and effect otherwise than, if such question be properly made, to inquire if there is any evidence at all to support the findings of fact. As to the weight and effect of the evidence, the finding of the trial court is as conclusive as the verdict of a jury. Lehnen v. Dickson, 148 U. S. 71, 73, 13 Sup. Ct. 481. And if we were called upon to examine the weight of the evidence, we should be embarrassed in this case, because there is no certificate that the evidence recited in the findings of fact was all the evidence submitted on the trial. If we assume the proceedings below to have been regular, and therefore that the special finding of facts is properly before us, then is presented the question whether the facts as found are sufficient to sustain the judgment. On this proposition we have no doubt. The court specifically found that the stock of the City National Bank of Ft. Worth, in question, was sold, and purchased about June 28 and November 2, 1894, by the State National Bank of Ft. Worth, under authority conferred by the notes which said bank held against Dan Garner and Caswell Bros.; that the purchase was duly notified to the City National Bank, and new stock certificates were issued therefor, and, under the direction of said State National Bank, placed in the name of John C. Harrison (its cashier) as trustee; that the State National Bank not only held and controlled the certificates, but placed the stock upon its books as an asset, and on March 5, 1895, reported the same to the comptroller of the currency; that John C. Harrison, trustee, in whose name the stock was placed, was a trustee for the State National Bank of Ft. Worth; and that at the date of the failure of the City National Bank the State National Bank of Ft. Worth was the owner of the stock. There is recited in the special findings some evidence, as well as evidential facts, tending to show that the State National Bank was, notwithstanding the sale and purchase, holding the stock as collateral, and not as owner; but, as said above, this court cannot consider nor give effect to this evidence. It was doubtless given full weight, in connection with the other evidence, by the judge who tried the case. Affirmed.

Digitized by Google

(94 Fed. 613.)

BOARD OF LEVEE INSPECTORS OF CHICOT COUNTY v. CRITTENDEN et al.

(Circuit Court of Appeals, Eighth Circuit. May 2, 1899.)

No. 1,013.

1. CORPORATIONS—CREATION BY IMPLICATION—CONFERRING CORPORATE POWERS ON LEVEE BOARD.

   A board of levee inspectors created by act of the legislature of Arkansas for a county, and given the powers usually incident to corporations, including the power to condemn land for levee purposes, employ engineers, attorneys, and other agents, make contracts for work, and take bonds from the contractors, and fix the rate of taxation for levee purposes within their district, constitutes a corporation, with power to sue and be sued, although not in express terms declared by the act to be a corporation.

2. LEVEES—RIGHT TO COMPENSATION FOR LANDS TAKEN OR INJURED—LAW OF ARKANSAS.

   Whether or not there exists a servitude upon the lands bordering on the Mississippi river within all the original Louisiana territory which authorizes the taking of land for a public levee without compensation (a question not decided), it has never been the policy of the state of Arkansas to claim or exercise such right, and it cannot be asserted in a federal court by a board of levee inspectors created by the legislature of that state by an act which provides for the payment of compensation for lands so taken.

3. SAME — TAKING EARTH AND TIMBER FOR REPAIRS — RIGHT OF OWNER TO COMPENSATION.

   A levee board, in taking earth and timber from land of an individual owner for the repair of a levee previously constructed, acts in its corporate capacity and within its powers, although there is no statutory provision for such taking; and the board is liable in such capacity, under the constitution of Arkansas, for just compensation to the landowner for so much of his property as was "taken, appropriated, or damaged."

4. EMINENT DOMAIN—DAMAGES FOR PROPERTY TAKEN—BENEFITS.

   General benefits resulting to a landowner in common with others from a public improvement are not to be taken into consideration, as against the value of his property taken or destroyed in making such improvement.

In Error to the Circuit Court of the United States for the Eastern District of Arkansas.

Sterling R. Cockrill and Ashley Cockrill, for plaintiff in error.

F. M. Rogers, U. M. Rose, W. E. Hemingway, and G. B. Rose, for defendants in error.

Before CALDWELL, SANBORN, and THAYER, Circuit Judges.

CALDWELL, Circuit Judge. This action was brought by O. B. Crittenden and Henry Crittenden, the defendants in error, against the board of levee inspectors of Chicot county, Ark., the plaintiff in error, to recover damages for entering upon their land, and by excavations and digging upon the land destroying one house, filling up a ditch cut for the purpose of drainage, and damming up the natural outlet for the surface water, and destroying timber. There was a demurrer to the complaint upon the ground that the facts stated failed to show a cause of action. The demurrer was overruled, and thereupon the defendant filed its answer. The answer set up the following defenses: First. A denial of the trespass complained of.

Digitized by Google

Second. That the board was created by the act of the legislature of the state of Arkansas for the purpose of building and repairing levees in Chicot county; that the defendant caused the levee to be built on plaintiffs' premises, but that the damages were duly assessed in accordance with the law at the sum of $1; and that in fact plaintiffs' lands were enhanced in value by the building of the levee in a sum greater than any damage done. Third. The plea of the statute of limitations of one year, and also of three years. There was a trial by jury, who assessed the plaintiffs' damages as follows: For damage to cultivated lands on account of excavations, $1,568; for damage to timber lands, $224; for cutting new ditch, $700; for damage to land on account of obstruction to drainage, $500; for destruction of house, $50,—and on this verdict judgment was entered. The plaintiffs entered a remittitur for the $500 allowed for the obstruction to drainage, because no claim was made for it in the complaint.

The demurrer raises two principal questions: First, that the act creating the board of levee inspectors confers no corporate powers upon the board, and does not authorize a suit to be brought against it; second, that the levee district would not be liable in any event, for the reason that in all the original Louisiana territory there is a servitude upon lands bordering upon the Mississippi river, which justifies the taking of land for a public levee without making any compensation therefor.

While it is true that the act does not in express terms say that the board of levee inspectors shall be a body corporate and subject to suit, it confers upon the board all the powers of a corporation. It is authorized to locate, build, and repair levees, and for that purpose condemn lands; to employ engineers and such other agents, attorneys, and employés as may be necessary to carry into effect the objects of the act; to pay them for their services; to let contracts for building or repairing levees; to fix and determine the rate of taxation to be levied on the lands in the levee district; to require bond from the contractors; to have general supervision of the levees; and, in short, to do everything necessary for the protection of the lands in that district from overflow. These powers are the principal attributes of a corporation, and, although the statute does not in terms declare it to be a corporation, it is sufficient if that intent clearly appears. Whenever the powers conferred upon a board are of such a character that they cannot be performed or made effective without the exercise of the right to sue and to be sued, that right is necessarily implied. Judge Dillon, in his work on Municipal Corporations, says:

"Although corporations in this country are created by statute, still the rule is here also settled that not only private corporations aggregate, but municipal or public corporations, may be established without any particular form of words or technical mode of expression, though such words are commonly employed. If powers and privileges are conferred upon a body of men, or upon the residents or inhabitants of a town or district, and if these cannot be exercised and enjoyed, and if the purposes intended cannot be carried into effect, without acting in a corporate capacity, a corporation is, to this extent, created by implication. The question turns upon the intent of the legislature, and this can be shown constructively as well as expressly. This is well illustrated in a case in Massachusetts, where the question was whether the plaintiffs were a corporate body with power to sue. They were not incorporated

Digitized by Google

expressly. But by statute the inhabitants of the several school-districts were empowered, at any meeting properly called, to raise money to erect, repair, or purchase a school house, to determine its site, etc.; the majority binding the minority. The cause was argued by able counsel, and after several consultations the judges of the supreme judicial court finally agreed in the opinion that the plaintiffs possessed sufficient corporate powers to maintain an action on a contract to build a school house, and to make to them a lease of land. But the intention of the legislature, where it is sought to show that a corporation has been created by implication, must satisfactorily appear." Dill. Mun. Corp. (4th Ed.) § 43.

And see, to the same effect, 1 Thomp. Corp. §§ 1, 2.

This question came before the supreme court of California, and that court held that an act of the legislature requiring the supervisors of a county, upon certain conditions, to create a levee district, and providing the details by which the work should be effected, makes the levee district thus organized by the board of supervisors a corporation, and a public corporation, although the act does not in terms declare it a corporation. Dean v. Davis, 51 Cal. 406, 411. And see, to the same effect, Elmore v. Commissioners, 135 Ill. 269, 25 N. E. 1010; Liverpool Ins. Co. v. Massachusetts, 10 Wall. 576. This is the construction put upon the act by the board itself, for the record shows that it has brought and maintained suits in its corporate name.

Whether in all the original Louisiana territory there is a servitude upon lands bordering upon the Mississippi river which justifies the taking of the land for a public levee without compensation, it is not necessary to determine in this action. Upon this general subject, see Eldridge v. Trezevant, 160 U. S. 452, 16 Sup. Ct. 345. It is enough to say that there is nothing in the record before us to show, or tending to show, that the state of Arkansas, or any department of its government, has ever claimed or asserted this right. If the right exists, it seems never to have been the policy of the state to assert it. On the contrary, the act under which the levee which gives rise to this suit was built makes provision for awarding to the landowner on whose land the levee is located and built such damages as "six land owners of the county * * * may deem just and right." We would not be justified in forcing on the state of Arkansas a policy inconsistent with that which has characterized all her legislation on this subject, and inconsistent with the provisions of the act which created this board of levee inspectors. The claim now put forward for the first time by this board finds no sanction either in the constitution or the laws of the state. Assuming, but not deciding, that, if there had been no legislation on the subject, such a servitude would exist, it is clearly not a right that is paramount to the constitution and laws of the state, and which the state is bound to exercise.

The demurrer to the complaint was properly overruled.

In determining the other questions in the case, it is important to bear in mind that this action is not for the taking of land upon which to construct a levee. The land upon which the levee was constructed was condemned, and the levee originally located and built in 1887. In 1892–93 it became necessary, for the protection of the land in the levee district from overflow, to increase the width and height of the levee. The earth and other materials

Digitized by Google

necessary for this purpose were taken from the plaintiffs' land inside of the levee, and outside of the land originally condemned for the right of way of the levee.

Obviously the damages resulting to the plaintiffs from this action of the board were not covered by the assessment of damages for the land originally taken for the levee. If the board could have proceeded under the act to condemn the additional land necessary to increase the width and height of the levee, it did not do so. It, or others acting by its authority, entered upon the plaintiffs' land and did the damage complained of. We have no difficulty in holding that, in all the board did in the premises, it was acting in its corporate capacity, and is liable in its corporate capacity for the property taken, damaged, or destroyed. Levee boards in the valley of the lower Mississippi are necessarily invested with large powers and discretion. It frequently occurs that levees have to be repaired, strengthened, or increased in height with the greatest celerity in order to prevent widespread damage to property, and destruction of animal, and sometimes human, life. In such emergencies time cannot be taken to condemn in a formal way the property and materials essential to be used to prevent such disasters; but the action of the board in such cases is its corporate act,—as much so as if it had proceeded in the most deliberate and formal manner to have the property condemned to the use to which it was appropriated. Such action is as much a part of the board's official duty as the original location and construction of the levee. The board's action in this case was not, therefore, extraofficial. But the mode of assessing the damages for property taken or damaged to meet such emergencies is necessarily different from that prescribed by statute in the case of the original location of the levee. There is no provision of the act authorizing the board to take land, timber, or earth, or to make excavations on land beyond the limits of the land condemned for the levee as originally laid off and constructed. Unquestionably, it is the existing policy of the state and of the act in question to compensate the owner for land taken for the original construction of the levee; and it is equally clear that after that has been done, and the levee built, the land, earth, and other materials necessary for maintaining, repairing, and strengthening the levee cannot be taken ad libitum outside of the limits of the right of way originally condemned, without making compensation to the owner for the value of the same, or the damages thereby sustained. The constitution of the state declares that:

"The right of property is before and higher than any constitutional sanction, and private property shall not be taken, appropriated or damaged for public use without just compensation therefor." Const. Ark. art. 2, § 22.

This constitutional provision is applicable to this case, and entitles the plaintiffs to "just compensation" for so much of their property as was "taken, appropriated or damaged" for the public use mentioned.

It is assigned for error that the board was not permitted to show the benefits which accrued to the land of the plaintiffs in conse-

Digitized by Google

quence of the acts complained of. But it is well settled that mere general or public benefits, or such benefits as result to the public at large,—as, for illustration in this case, to the other lands within this levee district,—cannot be charged to the owner of the land which is taken for the public use. "In estimating either the injuries or benefits," says Judge Cooley, "those which the owner sustains or receives in common with the community generally, and which are not peculiar to him, and connected with his ownership, use, and enjoyment of a particular parcel of land, should be altogether excluded." Cooley, Const. Lim. § 698; Chiles v. New Haven & N. Co., 133 Mass. 253: Sullivan v. Railroad Co., 51 N. J. Law, 518, 18 Atl. 689; Railroad Co. v. Currie, 62 Miss. 506.

There was an offer to prove some special benefits resulting to the plaintiffs from the action of the board complained of, which was rejected,—upon what ground the record does not disclose; but a sufficient ground to support the ruling of the lower court is found in the fact that the board set up no such claim or defense in its answer. Aside from the general denials of the answer, all that is found on the subject of damages is contained in paragraph 2 of the substituted and amended answer, which reads as follows:

"(2) Said board alleges that it was created under the act of March 20, 1883, for the purpose of building and repairing levees in Chicot county, Arkansas; that it caused the line of levee to be built on the plaintiffs' premises described in the complaint in the year 1887; that the damages done to said premises by reason thereof were duly assessed in accordance with law in the year aforesaid at the sum of one dollar; that, in fact, the plaintiffs' lands were enhanced in value by the levee built thereon in a sum greater than any damage done by the building thereof."

Obviously the benefits here attempted to be set up are the benefits which the plaintiffs' lands received in common with the other lands within the levee district by the original construction of the levee; and, moreover, if the averment could be considered to relate to special benefits, they are special benefits resulting from the original construction of the levee, which were considered and disposed of in the condemnation proceedings taken in 1887, and are quite foreign to this case. Nothing is said about any special benefits accruing to the plaintiffs or their land by reason of the acts done by the board for which this suit is brought. If the defendant relied upon any such defense, it should have set it up in its answer.

One of the pleas of the statute of limitations has been abandoned, and, as to the statute of three years, there being conflicting evidence as to when the cause of action arose, the court below properly submitted the issue to the jury, and its finding is conclusive. It would serve no useful purpose to examine in detail all the requests for instructions, and the numerous assignments of error arising upon exceptions. The principal and vital questions in the case have been considered and decided. A careful consideration of the whole record satisfies us that there was no substantial error committed in the trial of the case, and that the judgment is right, and should be affirmed.

Digitized by Google

(94 Fed. 618.)

PITTSBURG, C. & ST. L. RY. CO. v. HOOD.

(Circuit Court of Appeals, Sixth Circuit. May 15, 1899.)

No. 685.

1. HIGHWAYS—USE BY RAILWAY COMPANIES—NUISANCES.
   In the absence of legislative authority, either direct or through the authorized action of a municipality, the construction and use by a railroad company of its road longitudinally on a public highway is a public nuisance.

2. SAME—UNAUTHORIZED USE—LIABILITY FOR INJURIES.
   The unauthorized occupation and use of highways by a railway company makes such company a trespasser, and liable for such damages as proximately result to persons or property in the absence of contributory negligence.

3. USE OF STREETS BY RAILROADS.
   Where authority, under power delegated by the legislature to a city, is given to construct a railroad upon city streets, reasonable conditions, essential for the protection of the public interest, may be imposed, which, if accepted by the company, are binding on the parties.

4. SAME—ORDINANCES.
   An ordinance, under power delegated by the legislature, granting a railway company a right to construct a railroad upon a public landing under condition prohibiting use of the track during specified hours, combines contractual as well as police provisions, the latter being in the interest of public safety.

5. SAME—POLICE POWER.
   That a police provision pursuant to clear legislative authority is found in an ordinance which contains contract provisions does not affect the essential character of the power exercised, as within the corporate limits the police provision has the force of a law enacted by the legislature.

6. RAILROADS—PERSONAL INJURIES—PROXIMATE CAUSE.
   Plaintiffs' intestate, a teamster, stopped his team on the landing at a wharf at a point 30 to 60 feet from a train, and commenced to unhitch the horses preparatory to hauling another wagon into position. A movement of the train at this time was made, and the engine let off steam, and otherwise caused much noise. The horses became frightened, and the teamster, in the effort to control them, was dragged and trampled upon by the horses, inflicting injuries from which he died. The operation of trains at this point at the time of the accident was prohibited by ordinance. *Held*, that the act of the railroad company was the proximate cause of the injuries.

In Error to the Circuit Court of the United States for the Southern District of Ohio.

This was an action to recover damages for the death of plaintiff's intestate, based upon the ground that the injury which resulted in death was caused by the wrongful act and negligence of the defendant. The injury was sustained on a public landing in the city of Cincinnati, on the morning of September 19, 1895, at 6:50 a. m. This public landing is an open space on the river front, and is a large landing equal in dimensions to about two ordinary city blocks. It extends from the river across the line of Water street to the line of Front street, and from the east line of Broadway crossing Sycamore street to the west line of Main street. A railroad track crosses the north end of this public landing in the line of Front street. A spur track branches off from the south side of the main track in the line of Sycamore street, extending westerly, and parallel with the main line, into Water street. These are called the "connection tracks," by means of which passengers and freight are transferred across the city between the east and west systems of railroad terminals.

Digitized by Google

The tracks were constructed under the authority and provisions of a city ordinance, by which the plaintiff in error acquired the right to operate only during the nighttime and until 6 o'clock in the morning. The material parts of the ordinance for the purposes of this case are as follows: "The hours which said track may be used for the transmission of freight and passengers shall be as follows: From the 1st of April to the 1st of October from 8 o'clock p. m. to 6 o'clock a. m., and from the 1st of October to the 1st of April from 7 o'clock p. m. to 6 o'clock a. m., and no cars shall be drawn on the track at any other hours. The companies to have the privilege of using the steam or horse power, as they may, in their judgment, think best; subject, however, to the approval of the city council. But in no case shall cars be drawn through the city at a greater speed than six miles per hour." The public landing, during the daytime, was used for all purposes to which a public landing is usually devoted, there being a wharf at the foot of Sycamore street, including its use by wagons, drays, and other suitable vehicles in the transportation of freight, which was discharged and received at the landing. At the hour above mentioned a freight train operated by plaintiff in error entered the public landing, and was pushed into the Water street spur track, slowing up, and stopping its head end in Water street, with its rear end at or near Sycamore street. At this time the plaintiff's intestate was driving a two-horse wagon, loaded with tobacco, from the wharf diagonally across the public landing in the direction of Main street. He stopped at a distance variously estimated, but which may be put at from 30 to 60 feet from the train. His team was turned until it headed west, and the plaintiff's intestate then began to unhitch the horses, his purpose being to leave the wagon at that place, and drive the horses back to the wharf to aid in pulling the next wagon up the grade. Just at this moment a movement of the train was made, letting off steam, and otherwise causing much noise. The horses became frightened, and Hood went quickly to their heads in the effort to control them. The horses swung around suddenly, and plunged forward, dragging Hood as they went, and finally running over him, and inflicting the injuries from which he died. The main facts attending the accident as thus given are undisputed. The case, as stated in the petition, proceeded upon the grounds: First, that the cars were being operated unlawfully upon the public landing at the time, in violation of the ordinance; and, second, that the horses were frightened and the accident caused by the negligent manner in which the train was operated. In the court's instruction to the jury the case was thus stated: "The plaintiff claims that he is entitled to recover damages from defendant—First, because defendant's train, which frightened Hood's horses, and thereby caused the injuries of which he died, was unlawfully upon the public landing in violation of the ordinance; second, because the frightening of the horses, and the subsequent injuries to Hood, were caused by the negligence of the defendant in operating the train." Verdict was returned in plaintiff's favor for the sum of $4,500. A motion for a new trial having been overruled, judgment was duly entered upon the verdict, and to revise that judgment this writ of error is sued out.

Robert Ramsey, for plaintiff in error.

Alfred Mack, for defendant in error.

Before TAFT and LURTON, Circuit Judges, and CLARK, District Judge.

CLARK, District Judge, after stating the case as above, delivered the opinion of the court.

In relation to the first ground on which the right to recover was rested, the court charged the jury as follows:

"It being conceded, gentlemen, that the train of the defendant was unlawfully upon the public landing, in violation of the ordinance forbidding it to be there at all at that time, and that it frightened the horses of Hood and thereby caused the injury of which Hood died, a prima facie case of negligence on the part of the defendant is presented, which will entitle the plaintiff to

Digitized by Google

recover, unless it appears from the evidence that Hood was himself in fault, and that he was guilty of negligence which directly contributed to the injury."

This instruction is assigned for error, and is the only ground relied on in argument for reversal, and presents the only serious question which could arise on this record. The contention of plaintiff in error is: First, that, treating the ordinance in question as a valid police regulation, its violation is only evidence of negligence, which should have been submitted to the jury; and, second, that the ordinance was a mere contract, and not a police regulation, and that its violation was a breach of private contract, and not a violation of law. In determining the true construction and effect of this ordinance, it will be well to keep in view the law which would control the case in the absence of such an ordinance. The public landing on which the accident occurred is a public highway in the fullest sense, and must be so regarded for all legal purposes, and the right to occupy such a public highway with a railroad is an extraordinary privilege. Legislative authority must exist to warrant the occupation of such a highway by express grant or by necessary implication. 1 Wood, R. R. (2d Ed.) 746; 2 Dill. Mun. Corp. (4th Ed.) § 707; Memphis City R. Co. v. Mayor, etc., of City of Memphis, 4 Cold. 406; People's Pass. Ry. v. Memphis City R. Co., 10 Wall. 38; Barney v. City of Keokuk, 94 U. S. 324; 3 Cook, Corp. § 713. The legislature may, of course, instead of granting by direct act or general legislation the power to railroad companies to occupy streets for the purpose of constructing and operating railways thereon, delegate to municipalities the right to consent to such use of the streets. In the absence of legislative authority, either direct or through the authorized action of a municipality, the construction and use by a railroad company of its road longitudinally on a highway or street is a public nuisance, and the company is subject to indictment for creating and maintaining such a nuisance. City of Knoxville v. Africa, 47 U. S. App. 74, 23 C. C. A. 252, and 77 Fed. 501; 2 Dill. Mun. Corp. (4th Ed.) § 708; 1 Wood, Nuis. (3d Ed.) pp. 96, 97; Com. v. Old Colony & F. R. R. Co., 14 Gray, 93; Railroad Co. v. Naylor, 2 Ohio St. 235; Hussner v. Railroad Co., 114 N. Y. 433, 21 N. E. 1002; 1 Wood, Nuis. (3d Ed.) §§ 300, 303. Such unauthorized occupation and use of streets and highways, being wrongful, not only creates a nuisance, but constitutes a railway company a trespasser, and renders it liable for such damages as proximately result to persons or property in the absence of contributory negligence. If authority is given to construct a railroad upon the streets of a city or town, provided the company first obtains the consent of the municipal corporation, or where, by the delegation of power from the legislature, the municipality itself grants the right, reasonable conditions may be annexed to the grant and imposed upon the company as to the construction and operation of its road, such as are deemed essential for the protection of the public interest and safety; and, if these are accepted by the railroad company, they are binding upon the parties. 1 Wood, R. R. 748; Pacific R. Co. v. City of Leavenworth, 18 Fed. Cas. 953 (No. 10,649); Richmond, F. & P. R. Co. v. City of Richmond, 96 U. S. 521; 1 Dill. Mun. Corp. (4th Ed.) § 706. It is this legislative authority,

Digitized by Google

derived either immediately or through the authorized action of the municipality, which protects a railway company in the use of streets for railroad purposes from prosecution and suit for a public nuisance; and, when the consent of a city or town is required, the importance of an ordinance like the one in question is apparent. When the ordinance prescribes conditions on which the right is granted, these become binding, and the right to use the streets must be exercised strictly within the provisions of the ordinance. Railroad Co. v. Bingham, 87 Tenn. 522, 11 S. W. 705, is a leading and instructive case upon this subject. Judge Lurton (now one of the judges of this court), delivering the unanimous judgment of the supreme court of Tennessee, said:

"Mr. Wood, in his work upon Railroads, lays down what we regard as the sound and reasonable rule in the following words: 'It may be stated as a general rule that whatever is authorized by statute within the scope of legislative powers is lawful, and therefore cannot be a nuisance. But this must be understood as subject to the qualification that, where an act that would otherwise be a nuisance is authorized by statute, it only ceases to be a nuisance so long as it is within the scope of the powers conferred. If the power conferred is exceeded, or exercised in another or different manner from that prescribed by law, it is a nuisance as to such exercise, or difference in the mode of its exercise. Whenever an act is authorized to be done in a highway that would otherwise be a nuisance, the person or company to whom the power is given is not only bound to exercise it strictly within the provisions of the law, but also with the highest degree of care to prevent injury to person or property of those who may be affected by such acts.'"

In an extended note at page 759 of the work thus quoted from and approved the same author says:

"The rule is invariable that, where the statute imposes conditions upon the use of a highway for railway purposes, they must be complied with, or the railway will be a continuing nuisance. Town of Hamden v. New Haven & N. Co., 27 Conn. 158; Com. v. Erie & N. E. R. Co., 27 Pa. St. 339; Inhabitants of Springfield v. Connecticut R. R. Co., 4 Cush. 63; People v. Dutchess & C. R. Co., 58 N. Y. 152."

See, also, Harmon v. Railroad Co., 87 Tenn. 614, 11 S. W. 703, in which the doctrine of Railroad Co. v. Bingham is reaffirmed.

In Railroad Co. v. Naylor, 2 Ohio St. 235, the facts were that the charter of a railroad company merely fixed a few points through which the road was to pass from its commencement to its terminus, leaving the exact location of the road to the discretion of the corporation. After the road had been once located, the company undertook to relocate and to change and rebuild the road, and in doing so rendered the premises of the defendant in error less valuable than they had been before, for which suit was brought, and judgment recovered. On writ of error to the supreme court of Ohio, it was held that, the company having once located the road, their power in that respect ceased, that the relocation was unauthorized, and that the company was, consequently, liable for any damage done to property in the relocation of the road. The court, through Caldwell, J., said:

"The act of the railroad company in changing their location being unlawful, the next question arises,—whether they are liable to the defendant in error for the damage which he has sustained by such relocation. It is contended that,

Digitized by Google

inasmuch as the road as relocated does not touch his property, the company cannot be made liable. It is a general principle of law that a person is liable for all the damage done by his illegal act, and this whether the injury was intended or not. It is well settled that an action lies as well for damage to adjoining property, by stopping or impeding the travel on, to, or from a street or highway, as any other damage that can be done to property, although the property injured may not be touched by the obstruction. See Fletcher v. Railroad Co., 25 Wend. 462; Bingham v. Doane, 9 Ohio, 165; 5 Eng. Law & Eq. 339; 29 E. C. L. 336."

The doctrine thus declared does not proceed upon the ground that the construction and operation of the railroad under such circumstances is negligent, but upon the ground that the prosecution of the business is unauthorized by law, and constitutes a nuisance. Accordingly, in Congreve v. Smith, 18 N. Y. 79, the court of appeals of New York, speaking by Strong, J., said:

"The general doctrine is that the public are entitled to the street or highway in the condition in which they placed it; and whoever, without special authority, materially obstructs it, or renders its use hazardous by doing anything upon, above, or below the surface, is guilty of a nuisance; and, as in all other cases of public nuisance, individuals sustaining special damage from it, without any want of due care to avoid injury, have a remedy by action against the author or person continuing the nuisance. No question of negligence can arise, the act being wrongful."

So, too, in Heeg v. Licht, 80 N. Y. 579, it was adjudged that the keeping of gunpowder or other explosives under circumstances where it would be liable, in case of explosion, to injure the property or persons of those residing in close proximity, would constitute a private nuisance, and render the person keeping such explosives liable in damage in case of injury therefrom; and it was said that this liability was entirely without regard to the question whether the person so keeping such explosives was chargeable with carelessness or negligence. This doctrine is laid down broadly as the established law in 2 Dill. Mun. Corp. (4th Ed.) § 1032, in the following language:

"No person, not even the adjoining owner, whether the fee of the street be in himself or in the public, has the right to do any act which renders the use of the street hazardous or less secure than it was left by the municipal authorities. Whoever does so, whether by excavations made in the sidewalk by the abutter, or by unsafe hatchways left therein, or by opening or leaving open an area way in the pavement, or by undermining the street or sidewalk, or by placing unauthorized obstructions thereon, which make the use of the street unsafe or less secure, is guilty of a nuisance, and is liable to any person who, using due care, sustains any special injury therefrom; and in such cases the person who created or continues the nuisance is thus liable irrespective of the question of negligence on his part."

See Hayes v. Railroad Co., 111 U. S., at pages 235, 236, 4 Sup. Ct. 369, where this general rule is recognized, and cases cited in which it was declared. See, also, Hetzel v. Railroad Co., 169 U. S. 26, 18 Sup. Ct. 255; Evans v. Fertilizing Co., 160 Pa. St. 209, 28 Atl. 702; Dennis v. Eckhardt, 3 Grant, Cas. 392.

The rule in this class of cases is thus stated by Judge Cooley:

"It is only necessary for the plaintiff in these cases to show how he has been injured by the nuisance, and to distinguish his injury from that suffered by the public at large, and he brings himself within the rules entitling him to redress." Cooley, Torts (2d Ed.) 736, 737.

Digitized by Google

See, too, Powell v. Fall, 5 Q. B. Div. 597, Rapier v. Tramway [1893] 2 Ch. 588, Railway Co. v. Truman, 11 App. Cas. 45, in which the common law, as well as the effect of certain statutory enactments, were stated.

It is conceded, and could not be controverted, that the legislature of Ohio conferred upon the city power to grant the right to construct and use the railroad upon the public landing, with power to annex conditions. The existence of the power to consent to such a use of the streets and highways in the city, and the power to impose valid and binding conditions, were fully recognized in the well-considered case of Louisville Trust Co. v. City of Cincinnati, 47 U. S. App. 36, 22 C. C. A. 534, and 76 Fed. 296; Id., 78 Fed. 307. It will admit of question whether, in the absence of constitutional or legislative restriction, municipal corporations, by virtue of the police authority over streets, and the power to protect the safety of persons and property, might not impose, by ordinance duly enacted, conditions upon the operation of a railway through the streets of a city, similar to the provisions contained in the ordinance now in question. 1 Dill. Mun. Corp. (4th Ed.) §§ 393, 713; Richmond, F. & P. R. Co. v. City of Richmond, 96 U. S. 521; Chicago, B. & Q. R. Co. v. Nebraska, 170 U. S. 57, 18 Sup. Ct. 513; Gaslight Co. v. Murphy, 170 U. S. 78, 18 Sup. Ct. 505. It being established, and here conceded, that the city was vested with power to make the grant with conditions annexed, it is unnecessary for us to decide to what extent the power to impose conditions would exist in the absence of express legislative authority to do so. It is not to be doubted that the purpose of the legislature in conferring upon the municipality the power to consent to the use of the public landing with conditions was to enable the city to properly exercise its police power in the protection of persons and property against great danger in a public and much-used place, such as this landing. And in this view it is not open to reasonable question that the ordinance as enacted combines contractual as well as police provisions, the latter being in the interest of the public safety. In so far as the ordinance granted the right or franchise to construct and operate a railway upon this public ground, it became, when accepted, a contract; but the provision by which the use of the track was prohibited during the daytime was in its nature and effect a municipal or police regulation operating in the interest of public safety. McDonald v. Railway Co., 43 U. S. App. 79, 20 C. C. A. 322, and 74 Fed. 104; Hayes v. Railroad Co., 111 U. S. 228, 4 Sup. Ct. 369; Joy v. City of St. Louis, 138 U. S. 42, 11 Sup. Ct. 243. This police provision having been enacted pursuant to clear legislative authority, the fact that it is found in an ordinance which also contains contract provisions does not change the result or affect the essential character of the power exercised; and this police provision, being thus specifically authorized and duly enacted, unquestionably has, within the corporate limits, the force of a law enacted by the legislature of the state. Hayes v. Railroad Co., 111 U. S. 228, 4 Sup. Ct. 369; Robbins v. City of Chicago, 4 Wall. 657; City of Chicago v. Robbins, 2 Black, 418; Doran v. Flood, 47 Fed. 543; McDonald v. Railway Co., 43 U. S. App. 79, 20 C. C. A.

Digitized by Google

322, and 74 Fed. 104; 1 Dill. Mun. Corp. (4th Ed.) §§ 308, 393. It results from this view that the operation of the railroad by plaintiff in error during the daytime, contrary to the provisions of the ordinance was a violation of law, and constituted a nuisance.

It is finally insisted that there was error in the court's holding that the act of plaintiff in error was the proximate cause of the injury sustained. The proximate causal connection between the wrongful operation of the railroad by plaintiff in error and the injury is, however, in the light of authority, too clear to admit of question. McDonald v. Railway Co., 43 U. S. App. 79, 20 C. C. A. 322, and 74 Fed. 104; Railroad Co. v. Reesman, 9 C. C. A. 20, 60 Fed. 374, and 19 U. S. App. 596; Hayes v. Railroad Co., 111 U. S. 228, 4 Sup. Ct. 369; Whart. Neg. § 107. Hayes v. Railroad Co., 111 U. S. 228, 4 Sup. Ct. 369, strongly supports throughout the conclusions at which we arrive in this case. And this is so notwithstanding the difference in the specific ground of liability declared in that case and in this. Substantially the same grounds urged for reversal here were pressed upon the attention of the court unsuccessfully in that case. In that case the liability of the defendant was put upon the ground of negligence in the omission of a duty imposed by ordinance, while the ground of liability in the case at bar is that of a public nuisance causing special injury. In that case the operation of the railway was permitted, and the mode of operation regulated, whereas in this case the use of the railway track at the time was expressly prohibited. The provision of law in that case went to the manner of operation, while in this it goes to and denies the right to operate at all. The distinction is between the prosecution of a lawful business in a negligent manner and the prosecution of a business prohibited by law. The breach of law in that case was an omission of duty imposed, and in this the commission of a wrong expressly prohibited. Whether, in the ordinary case, where the original act of the defendant is lawful, or authorized by statute, negligence is the gist of the action, or a necessary element, we are not required to decide, as the original act in the case at bar was clearly unlawful and wrongful.

The cases relied on by counsel for plaintiff in error are those in which the business was lawful, and the question was whether the business was operated in a negligent or unlawful manner. In view of the distinction which we have stated, such cases are not applicable. We conclude, therefore, in view of the whole case, that the court rightly instructed the jury that the undisputed facts established a right to recover, unless such right was defeated by the contributory negligence of the plaintiff's intestate. The fact that the instruction apparently proceeded upon the theory that the presence and operation of the train unlawfully upon the public landing constituted also a case of negligence does not affect the correctness of the proposition that the plaintiff was, upon the undisputed facts, entitled to recover, provided plaintiff's intestate was in the exercise of due care on his part. We think the law as thus stated and applied to this case is fully sustained upon authority, and is sound in principle, and we now so hold in a case which squarely presents the question. Judgment affirmed.

Digitized by Google

(94 Fed. 630.)

In re CURTIS et al.

(Circuit Court of Appeals, Seventh Circuit. June 6, 1899.)

No. 575.

BANKRUPTCY—PETITIONING CREDITORS—ESTOPPEL.

A debtor made a general assignment for the benefit of creditors under a state statute providing for the administration and distribution by the state courts of estates so assigned, and requiring creditors to file their claims within three months after notice from the assignee, on pain of being postponed until all proving creditors were paid in full. The time having not yet arrived when a petition in involuntary bankruptcy could be filed under the act of 1898, certain creditors filed their claims with the assignee; being then in ignorance of facts tending to show that the assignment was fraudulent, and that the debtor had disposed of property in fraud of creditors. No dividend was declared under the assignment, nor any judicial action taken on the claims filed. *Held*, that such creditors were not estopped to maintain a petition in involuntary bankruptcy against the debtor.

Appeal from the District Court of the United States for the Southern District of Illinois.

In bankruptcy. On August 11, 1898, the bankrupts, who are surviving partners of Levi H. Henry, deceased, doing business as the Bank of Waverly, in the Southern district of Illinois, made a voluntary assignment for the benefit of their creditors, under the statutes of the state of Illinois (2 Starr & C. Ann. St. [2d Ed.] p. 2174 et seq., c. 72, §§ 37–51), to Ausben W. Reagal, who duly qualified and entered upon the discharge of his duties, and, pursuant to section 38 of the chapter, notified creditors to present their claims within three months. The forty-sixth section of the chapter provides that creditors not so filing their claims shall not participate in dividends until after payment in full of all claims so presented. Under that notice the creditors who subsequently presented the petition in bankruptcy in the court below filed their respective claims with the assignee in the months of August and October, 1898. On November 1, 1898, the requisite number of creditors filed their petition in the district court, seeking an adjudication of bankruptcy against their debtors. By an amended petition filed by leave of the court on November 25, 1898, the creditors set forth, not only the general assignment as an act of bankruptcy, but also certain fraudulent transfers by the debtors, of which they asserted they were ignorant at the time of the filing of their claims under the assignment. No proceedings were had upon the claims filed with the assignee, with the exception of the claim of Caruthers, which proceeding is not considered by the court, for the reason that, omitting this claim, a sufficient number of creditors joined in the petition. No dividend was declared under the assignment, and no action by the court was had upon the claims presented, with the exception stated, until the 29th of November, 1898, and after the filing of the amended petition in bankruptcy, and that merely an order allowing the claims unless objections thereto should be filed within 30 days thereafter, and such action was without the knowledge or consent of the petitioning creditors. On the 24th of January, 1899, a decree of bankruptcy passed, from which decree on the 1st day of February, 1899, an appeal was allowed to this court. The opinion in the court below is reported in 91 Fed. 737, 1 Nat. Bankr. News, 163.

Logan Hay and Samuel P. Wheeler, for appellants.

Bluford Wilson and P. B. Warren, for appellee.

Before WOODS, JENKINS, and GROSSCUP, Circuit Judges.

JENKINS, Circuit Judge, upon the foregoing statement of facts, delivered the opinion of the court.

We do not find occasion upon this appeal to deal with the interesting and important question determined by the court below,—whether

Digitized by Google

upon the going into effect of the bankrupt law a general assignment for the benefit of creditors under a state law is void, or voidable merely upon attack by creditors through proceedings in bankruptcy, for upon other grounds we are of opinion that the adjudication was correct. The question is one not free from difficulty, and one upon which the courts are not wholly at agreement. In re Gutwillig, 90 Fed. 475, affirmed upon appeal in 92 Fed. 337, 34 C. C. A. 377; In re Smith, 92 Fed. 135; In re Romanow, Id. 510.

It is urged that the petitioning creditors, from the mere fact of filing their claims with the assignee under the general assignment, are estopped to attack that assignment. We do not think that, strictly speaking, there is here any estoppel in pais. Such an estoppel arises from acts or conduct which have induced change of position by another in accordance with the real or apparent intention of the party against whom the estoppel is asserted. But here there has occurred no action induced by the presentation to the assignee of the claims of the petitioning creditors. There was no change of position by him. No dividend was declared, no action taken upon the claims until subsequent to the filing of the amended petition in bankruptcy. If the petitioning creditors are precluded from asserting their supposed rights in the bankruptcy court, it is not because of any estoppel that has been wrought by their conduct, but because they have elected a particular remedy, and cannot be heard to invoke another or inconsistent remedy. We are not inclined to dispute the general principle which underlies the doctrine of the election of remedies, nor have we any contention with the rule which denies to a creditor who has knowingly participated in the execution of a conveyance prohibited by law the right to impugn that conveyance. We need not, therefore, review the numerous cases presented to our consideration upon that question.

At the time of the filing of these claims the creditors were in a peculiar position. Unless such claims were presented within three months from the 19th of August, 1898, payment of any part of them would be postponed to the payment in full of all claims presented within that time. It was not permitted by the law to file an involuntary petition in bankruptcy prior to the 1st day of November, 1898, and whether the proper combination of creditors in number and amount could then be procured to join in such petition may have been problematical. Under such circumstances, it would hardly have been the part of prudence to have delayed the filing of the claims; for, if the bank in question had possessed quick assets, a dividend might have been declared and paid before the bankrupt court could be properly invoked in protection of their rights. This, however, may possibly not excuse, if the election of remedy was deliberate and intelligent. The principle which underlies the doctrine of election is held, in general, to be as stated by Mr. Bigelow in his work on Estoppel (5th Ed. pp. 679, 683),—that any decisive act done by a person with knowledge of his right and of all other facts material to him is binding. And this is, in substance, the rule asserted by the supreme court in Robb v. Vos, 155 U. S. 13, 43, 15 Sup. Ct. 4. We had occasion to consider this question of election of reme-

Digitized by Google

dies in Oil Co. v. Hawkins, 46 U. S. App. 115, 20 C. C. A. 468, and 74 Fed. 395; and we there held that, to constitute a valid election, the act must be with the full knowledge of the circumstances of the case, and of the right to which the person put to his election was entitled, and that, if one party elects a remedy in ignorance that he may have pursued a better remedy, he may change his position, if the change will impose no detriment, in a legal sense, upon the opposing party. We do not think it needful, in view of that decision, to enlarge upon the subject, and need only inquire whether the facts here present a case which falls within the principle there declared. It is shown by the record that certain transfers of property by the bankrupts were made, which the petitioning creditors insisted were fraudulent, and certain other frauds are asserted, which need not be here detailed, and that knowledge of these fraudulent transactions was not possessed by the petitioning creditors prior to the 1st day of November, 1898, when this petition was presented; that their claims were filed under the assignment in ignorance of these alleged fraudulent transactions. Under the circumstances, and considering that no legal detriment has resulted to any one from the filing of claims under the assignment, we are of opinion that the petitioning creditors are not precluded by the mere fact of filing their claims with the assignee from selecting another forum, in which, as they think, their rights as against supposed fraudulent transactions may be the better protected. The claims were filed in the belief that the transactions of the bankrupts were fair and honest and in the interest of their creditors. No one has been harmed by that act. No one has received any benefit from it, or suffered any detriment because of it. Having now discovered facts which tend to show that this assignment was fraudulent, and that the debtors have disposed of property with a view to defraud creditors, we perceive no just reason to deny the petitioning creditors the right to appeal to the courts of bankruptcy, where such matters are properly, if not now exclusively, cognizable, for the assertion of their rights. The decree is affirmed.

GROSSCUP, Circuit Judge, sat at the hearing, and concurred in the decision of this cause, but, by reason of illness, had no share in the preparation of the opinion.

(94 Fed. 705.)

MERCHANTS' NAT. BANK OF HELENA, MONT., et al. v. SCHOOL DIST. NO. 8, OF MEAGHER COUNTY, MONT.

(Circuit Court of Appeals, Ninth Circuit. May 2, 1899.)

1. NATIONAL BANKS—INSOLVENCY—TRUST FUNDS.

A national bank received funds of a school district which it had no right to receive as an ordinary deposit, or to mingle with its own funds, and which it undertook to hold for the special purpose of paying certain bonds of the school district, and no other. It did in fact mingle the funds with its own, and became insolvent, none of the bonds having been presented

Digitized by Google

for payment. It had on hand, at the time it suspended business, cash in excess of the amount of such deposit, which came into the hands of its receiver. *Held*, that such deposit constituted a trust fund, which was recoverable by the school district from the receiver; the presumption being that so much of the cash on hand as equaled the deposit was the money of the school district.

2. SAME.

Neither a bank nor its receiver can deny the receipt of money deposited with the bank as a trust fund on the ground that no money was actually deposited, where it received and accepted credit for the amount with a correspondent, and received the money thereon in due course of business.

3. SAME—CLAIMS DISALLOWED BY RECEIVER—INTEREST.

No interest is recoverable against the fund in the hands of the receiver of an insolvent national bank on recovery in a suit to establish a claim against the bank, made necessary solely by the disallowance of the claim by the receiver. The receiver is required to exercise his judgment as to the allowance of claims, and other creditors are not chargeable with interest because of an error on his part.

Appeal from the Circuit Court of the United States for the District of Montana.

McConnell & McConnell, for appellants.
H. G. McIntire, for appellee.

Before GILBERT and ROSS, Circuit Judges, and HAWLEY, District Judge.

GILBERT, Circuit Judge. The facts in this case, as they were found by the master in chancery, to whom the cause was referred to make findings and report conclusions of law, are, in brief, as follows: On July 1, 1896, certain coupon bonds of school district No. 8, of Meagher county, Mont., which it had issued in the aggregate sum of $14,000, became due and payable. Prior to that date, and for the purpose of refunding and paying the said bonds, the school district issued a second series of coupon bonds in the aggregate sum of $13,000, and sold them to H. B. Palmer, of Helena, Mont., for $13,056. On July 11, 1896, Palmer deposited with the Merchants' National Bank of Helena, Mont., "as a special deposit to the credit" of the school district, the sum of $13.056, under an agreement between Palmer and the officers of the bank that said sum should be paid out only in the redemption and payment of said prior coupon bonds, which matured on July 1, 1896, and that an account should be opened therefor, known as the "Redemption Account White Sulphur Springs School District Bonds." In pursuance of said agreement, an account was opened upon the books of the bank, designated "Bonds of Meagher County." The officers of the bank knew that the $13,056 so received from Palmer was the proceeds of said refunding bonds, and that the same was applicable only to the redemption of said matured bonds. The coupon bonds maturing upon July 1, 1896, had not been presented by the owners thereof for redemption and payment, but were outstanding and unpaid. On February 13, 1897, the bank became insolvent, and the receiver took possession of its property and assets, among which was cash in the sum of $19,533, and the receiver collected thereafter from other assets $200,000. The bank has not money or

Digitized by Google

assets sufficient to pay its indebtedness in full. Upon these facts it was held, among other conclusions of law, that said sum of $13,056 was a "special deposit" with the bank to the credit of the school district, to be applied solely to the redemption and payment of the prior bonds. A decree was entered, ordering that the receiver pay over to the school district the said sum, with interest from the date of the commencement of the suit. On the appeal it is contended that, in any view of the facts of the case, the court erred in decreeing payment to the appellee of the full amount of $13,056, and erred in allowing interest on the same. The deposit with the bank of the funds realized upon the sale of the school district's bonds was prohibited by section 1811 of the Political Code of Montana, which provides as follows:

"All moneys arising from the sale of said bonds shall be paid forthwith into the treasury of the county in which said school district is located and shall be immediately available to apply to the purpose authorized and no other purpose."

Section 1817 denounces the penalty for the violation of the statute. Under the terms of the statute, the bank could not lawfully receive the moneys of the school district as an ordinary deposit, or mingle the same with its own funds. The bank had knowledge of the nature of the funds, and was chargeable with knowledge of the statute. That it did understand the rights of the school district in that regard is shown by the facts as they were found by the master. The bank undertook to receive the money as a trust fund for an express purpose, and for no other. It is immaterial that in the findings the deposit is designated a "special deposit." The true nature of the transaction is disclosed by the facts. The money was to be treated as the funds of the school district, and not as the funds of the bank, and, in the light of that understanding, it is clear that the bank had no right to commingle the money with other funds. The fact that it did place it with other funds, and that at the time when its doors were closed there was not in its possession a separate fund in accordance with the understanding had when the deposit was made, cannot prejudice the rights of the appellee, so long as it can be shown that a sum of money equal to the amount so deposited remained in the possession of the bank, and was there when the receiver took possession. It will be presumed that of the funds so on hand $13,056 belonged to the appellee. Moreland v. Brown, 30 C. C. A. 23, 86 Fed. 257; National Bank v. Insurance Co., 104 U. S. 54; Capital Nat. Bank v. Coldwater Nat. Bank (Neb.) 69 N. W. 115.

It is contended that the finding of the master, to the effect that Palmer deposited with the bank the sum of $13,056, is at variance with the facts as they are disclosed in the evidence. It appears from the evidence that the bonds were sold in Boston, and that the sum realized thereon was deposited with the National City Bank of Boston, which bank was the correspondent of the Helena bank. The Boston bank notified the Helena bank that that amount had been placed to the credit of the latter by a letter which was received by the bank at Helena on July 11, 1896. On July 3d the Helena bank had with the Boston bank a credit of $39,011.60,

Digitized by Google

against which it drew on that day the sum of $10,000, leaving a balance of $29,011.60, which was not further reduced until July 13th, when a draft for $8,075 was drawn against it. On July 11, 1896, the Helena bank gave the personal account of Palmer a credit on its books of the full amount of the proceeds of the sale of the bonds. Thereupon Palmer gave the bank his personal check for $13,056, and requested that an account be opened as found by the master. Upon these facts it is contended that the money which was realized on the sale of the bonds was never actually deposited with the Helena bank. It is not material in this case whether it was actually so deposited or not. It is undisputed that the money belonged to the school district, and that it was deposited with the bank's correspondent in Boston, and that, upon the receipt of intelligence of such deposit, the Helena bank opened the account, and entered into the agreement which was indicated in the findings of the master. The Helena bank, if it had not then the money in its actual possession, had it under its control, and could lawfully, in the due course of banking, have paid it over to Palmer or to the school district. Instead of so paying the money, it chose to enter into the arrangement which was consummated. Neither the bank nor the receiver is now in a position to say that the money received by the bank's agent was not actually received by the bank. The question is not complicated by any failure on the part of the Boston bank to pay to the Helena bank in full the amount which it received. The Helena bank received the money in the due course of business. In view of the receipt of that sum by its agent, and the arrangement which it made with Palmer on behalf of the school district, it will be deemed to have diverted from its funds in bank on July 11, 1896, the sum of $13,056, and to have placed the same to the credit of the school district. That sum became and was from that date a trust fund, subject to disbursement only upon the order of the school district. In Bank v. Armstrong, 148 U. S. 58, 13 Sup. Ct. 533, the court quoted with approval the language of Mr. Justice Miller in Marine Bank v. Fulton Bank, 2 Wall. 252, in which it was said:

"All deposits made with bankers may be divided into two classes, namely, those in which the bank becomes bailee of the depositor, the title to the thing deposited remaining with the latter, and that other kind of deposit money peculiar to banking business, in which the depositor, for his own convenience, parts with the title to his money, and loans it to the banker; and the latter, in consideration of the loan of the money and the right to use it for his own profit, agrees to refund the same amount, or any part thereof, on demand."

The school district could not, and did not, part with its title to the money, nor did it lend the same to the bank. The general principles which govern this case were considered by this court in the cases of Spokane Co. v. First Nat. Bank of Spokane, 16 C. C. A. 81, 68 Fed. 979, and Moreland v. Brown, 30 C. C. A. 23, 86 Fed. 257. In the former case it was held that the depositor of a fund intrusted to a bank, by which it has been misapplied, is not entitled to a general lien upon the assets of the bank for the repayment thereof, but that he can follow the same, so far as it can be traced in the possession of the bank, either in its original form

Digitized by Google

or in forms to which it has been converted, or into a general fund, with which it has been commingled, and that his right to recover it in the latter instance will depend upon whether or not a sum of money still remains in the possession of the bank equal to the amount so due him; it being the presumption of the law that, if moneys have been disbursed out of such fund, it was the money which the bank had the right to pay out, and not the money which was intrusted to it in a fiduciary capacity. In Moreland v. Brown the facts were these: A debtor had deposited in a New York bank the amount which he owed to a creditor in Helena. The New York bank telegraphed the Helena bank to pay the debt, and charge the same to its account. The Helena bank refused to pay in any way, except by exchange on New York, which the creditor refused to accept. The creditor refused also to permit the amount to be placed to his credit in the Helena bank. He then accepted a draft on the New York bank to be a payment only if honored. The Helena bank closed its doors, and the draft was not paid. The court held that the refusal of the creditor to accept the draft in payment, or to permit the amount to be placed to his credit, fixed the character of the deposit in the Helena bank as a special deposit for him, subject to the law governing such deposits, and that the relation of debtor and creditor was not established between him and the bank. We find no error in the decree of the circuit court that the receiver pay the appellee the full amount of the fund so deposited to its credit.

But the objection which is urged by the appellants to the allowance of interest on the claim must be sustained. The receiver disallowed the claim, and the suit was brought to obtain a decree for its payment. No interest is chargeable against the fund in the receiver's hands, based upon his erroneous action in disallowing claims. It is his function, by and under the direction of the comptroller, to disburse the fund according to law. In the matter of the allowance or disallowance of claims he must exercise his judgment. If he make an erroneous decision, the law does not contemplate that the other creditors shall suffer therefor. If interest is allowed to the appellee, the dividends payable to the other creditors will by that amount be reduced. In White v. Knox, 111 U. S. 784, 4 Sup. Ct. 686, Mr. Chief Justice Waite said:

"The only claims the comptroller can recognize in the settlement of the affairs of the bank are those which are shown, by proof satisfactory to him, or by the adjudication of a competent court, to have had their origin in something done before the insolvency. It is clearly his duty, therefore, in paying dividends, to take the value of the claim at that time as the basis of distribution. If interest is added on one claim after that date, before the percentage of dividend is calculated, it should be upon all, otherwise the distribution would be according to different rules, and not ratably, as the law requires."

The demand for interest in this case is not based upon any action of the bank itself before insolvency. It rests solely upon the disallowance of the claim by the receiver. The cause will be remanded to the circuit court, with instructions to so modify the decree as to disallow the interest upon the appellee's claim. In other respects the decree will be affirmed.

Digitized by Google

(94 Fed. 709.)

In re DUNNING.

(Circuit Court of Appeals, Ninth Circuit. May 23, 1899.)

No. 538.

APPEAL AND ERROR—ASSIGNMENT OF ERRORS.

Where, on appeal from a final order of the district court granting a discharge to a bankrupt, no assignment of errors is filed in such court, as required by rule 11 of the circuit courts of appeal (31 C. C. A. cxlvi., 90 Fed. cxlvi.), the judgment of the district court will be affirmed.

Appeal from the District Court of the United States for the Southern District of California.

Milton K. Young, for appellant.
Franklin P. Bull, for appellee.

Before GILBERT and MORROW, Circuit Judges, and HAWLEY, District Judge.

GILBERT, Circuit Judge. The appeal was taken in this case from the final order of the district court granting Eber T. Dunning a discharge from all debts and claims which were made provable by the acts of congress relating to bankruptcy which existed on the 3d day of September, 1898. No assignment of errors was filed in the district court, and the requirements of our rule 11 in that respect were wholly disregarded. On account of such failure to comply with the rule, the judgment of the district court will be affirmed. U. S. v. Goodrich, 4 C. C. A. 160, 54 Fed. 21; Insurance Co. v. Conoley, 11 C. C. A. 116, 63 Fed. 180. We place our judgment of affirmance wholly upon the ground indicated, in the hope that attention may be drawn to the necessity of compliance with the rule. It may be added that upon the hearing of the cause not only was no "plain error not assigned" suggested, but, upon the contrary, the court was convinced that upon the merits the decision of the district court was not erroneous.

(94 Fed. 716.)

ANDERSON v. CONDICT et al.

(Circuit Court of Appeals, Seventh Circuit. June 6, 1899.)

No. 538.

RAILROAD FORECLOSURE—SALES SUBJECT TO CLAIMS AGAINST RECEIVER.

Where a decree for the sale of railroad property in a foreclosure suit contains an independent and unconditional provision that the sale shall be subject to all current liabilities of the receiver, the purchaser takes the property subject to such condition, without regard to the question of priority between such liabilities and the liens under which the sale is made.

On Petition for Rehearing.

For former opinion, see 35 C. C. A. 335, 93 Fed. 349.

Digitized by Google

Alfred H. Gross, for appellant.
Levy Mayer, for appellees.

WOODS, Circuit Judge (concurring in the overruling of the petition for a rehearing). The twenty-eighth paragraph of the decree contains the clause, "and also subject to all current liabilities of the receiver incurred." That is an independent and absolute provision, unqualified by anything that precedes or follows it. What precedes has reference to such claims and allowances as shall be adjudged prior in lien or superior in equity to the receiver's certificates and the mortgage foreclosed, and what follows to obligations assumed or imposed by order of the court which should be adjudged superior in equity to the mortgage. The thirty-first paragraph has no reference to current liabilities incurred by the receiver, but only to claims superior to any of the liens or claims provided to be paid from the proceeds of the sale. In other words, the sale was to be subject unconditionally to the current liabilities of the receiver, without question of essential priority, but, in respect to other claims, "subject to the payment only of the amount allowed upon such of said claims so filed within said 90 days as shall be found entitled to priority over the lien of the trust deed herein foreclosed and which the court may further find should be paid by said purchaser or purchasers." Whether the court erred in preferring current liabilities to the receiver's certificates is a question which does not arise upon this record, and which in no event could be raised by a purchaser under the decree.

(94 Fed. 717.)

ANGLE et al. v. CHICAGO, ST. P., M. & O. RY. CO. et al.

(Circuit Court of Appeals, Seventh Circuit. June 6, 1899.)

No. 501.

RAILROADS—ISSUANCE OF STOCK—TRUSTS.

A holder of railroad stock, issued to him as full paid, in payment of an undisputed claim, takes it free of all trusts created in favor of the railroad company by previous contracts to which he was not a party.

Appeal from the Circuit Court of the United States for the Western District of Wisconsin.

B. W. Jones and M. I. Southard, for appellants.
Thomas Wilson, for appellees.

Before WOODS, JENKINS, and GROSSCUP, Circuit Judges.

WOODS, Circuit Judge. For a statement of the averments of the bill in this case reference is made to the opinion of the supreme court on demurrer thereto in Angle v. Railway Co., 151 U. S. 1, 14 Sup. Ct. 240. This appeal is from a final decree on the merits dismissing the bill for want of proof of the alleged conspiracy and fraud. Before the hearing was had which resulted in that decree,

Digitized by Google

another suit, against the Omaha Company and the Portage Company, wherein a bill averring the same facts as are here alleged was brought by the Farmers' Loan & Trust Company, as trustee of a mortgage executed by the Portage Company, for the purpose of charging the lands embraced in the disputed grant with the lien of that mortgage, had been determined in favor of the defendants on evidence which the court below deemed to be substantially the same as the evidence in this case, and on appeal that decree had been affirmed. Farmers' Loan & Trust Co. v. Chicago, P. & S. R. Co., 163 U. S. 31, 16 Sup. Ct. 917. The opinion in that case shows that three propositions were claimed to be established by the evidence, any one of which it was contended entitled the plaintiff to the relief prayed for. The first two of those propositions, placing the second first, are in essence the same as the following, which are insisted upon here: First. The evidence establishes that the Omaha Company became the sole or controlling stockholder of the Portage Company, and as such stockholder caused to be transferred to itself all of the property of the Portage Company, including its land grant, so as to deprive Angle, a creditor of the Portage Company, of payment of his debt. By thus wrongfully acquiring the property of the Portage Company, the Omaha Company became trustee of the property for the satisfaction of the judgment. Second. The evidence establishes that the Omaha Company wrongfully, unlawfully, unconscientiously, maliciously, or fraudulently interfered and prevented Angle and the Portage Company from completing the work of construction under the Angle contract, and from earning the land grant, and took over to itself the property of the Portage Company, including the land grant. It thereby became liable to Angle for the damage done to him as measured by complainants' judgment against the Portage Company, and became trustee ex maleficio of the land grant and its proceeds for the satisfaction of the judgment. These propositions both rest upon the charge of conspiracy and fraud. To use the language of the supreme court:

"Involved in and essential to the plaintiff's case is the specific charge that the Omaha Company bribed certain officials of the Portage Company (in whose hands was, perhaps, the only valid outstanding stock of the Portage Company, and held by them in trust) to dispose of that stock, so that the Omaha Company, with knowledge of the trust attending the stock, and in breach thereof, became the controlling, if not the sole, stockholder in the Portage Company."

It is said in the brief for appellant that "this declaration is clearly limited to the trust character of the Jackson stock," but the language used, the context and other parts of the opinion, do not seem to warrant so narrow a construction. The opinion proceeds immediately to state the fact of the transfer of the Jackson stock to Cable, and then says, "This transaction is challenged, and its honesty and good faith are primary matters of inquiry." Then follows a review of the evidence, ending on page 44, 163 U. S., and page 922, 16 Sup. Ct., with the following statement of the court's conclusion:

"In short, to sum up this branch of the case, from the testimony in this record it is, we think, clear that Jackson was guilty of no breach of trust in

Digitized by Google

selling this stock; that it belonged, both legally and equitably, to J. C. Barnes and himself; that they had a full legal and moral right to sell it to any one who would pay their price; and it equally follows that the Omaha Company and Cable, in making the purchase, were themselves guilty of no wrong."

This is followed with a brief consideration of the charge that the Omaha Company wrongfully prevented the Portage Company from earning the land grant. The conclusion of the opinion is of present importance:

"No creditor of the Portage Company had any legal or equitable right to any portion of those lands; and if the legislature had simply revoked the grant, and resumed possession on behalf of the state, there would be no pretense of a claim that any such creditor could subject the lands, or any interest therein, to the satisfaction of his debt. There is no intimation of a contrary doctrine in the opinion filed in Angle v. Railway Co., supra. All that was there held was that the legislative action did not condone, and was not intended to condone, any wrongs done by the Omaha Company; and that, if the Omaha Company had been guilty of any fraudulent conduct, in consequence of which the Portage Company had been prevented from earning the grant, and the legislature thereby induced to revoke it, and bestow it upon the Omaha Company, the party wronged by those acts of the Omaha Company was entitled to redress. But here, as we have seen, although the charges are the same, yet the testimony fails to make good those charges, or to show any fraudulent or wrongful conduct on the part of the Omaha Company. The legislative act condoned no wrong, for there was no wrong to condone. It neither placed nor continued any burden upon the land grant, and hence the mortgage creditors of the Portage Company, having no lien, legal or equitable, cannot pursue the lands in the hands of the Omaha Company. There is this substantial difference between the Angle Case and the present: While in each are charges of grievous wrong on the part of the Omaha Company, in consequence of which property which otherwise would have been subjected to the payment of the plaintiff's claims was obtained by the Omaha Company, in the Angle Case the Omaha Company demurred, saying there was no remedy, notwithstanding the wrongs alleged. We held that, if such wrongs as were alleged had been committed, the law did furnish a remedy. In this case the Omaha Company took issue upon the charge of having committed such wrongs, and the testimony shows that it did not commit them."

On the appeal in this case it was said:

"But it must be remembered that the wrongs of the Omaha Company were done before the legislature passed either the act of 1882 or that of 1883, and it is to redress those wrongs that this suit is brought. * * * The wrong was not done by the state, or in the act of the legislature in taking away the land grant, but in such proceedings on the part of the Omaha Company as put the Portage Company in a position which apparently called for the action of the legislature. * * * The property was in the Portage Company for the purpose of aiding in the construction of this road. Work was done by the plaintiff in that direction. Equity recognizes a right that that property should be applied in the payment for that work. The wrongdoing of the defendant, the Omaha Company, has wrested the title to this property from the Portage Company, and transferred it to itself. It has become, therefore, a trustee ex maleficio in respect to the property."

"In considering the evidence in this case," it is said in the last brief for the appellant, "the court can get no light from the opinion in the bond case as to the effect of the fraudulent and criminal lobby contract upon Angle's rights, as to the frauds practiced upon the legislature by means of this lobby contract, or by the false representations and concealments which are charged in the bill, and which are fully proved in this case. Nor can it learn, from the opinion, what interpretation the supreme court put upon the sell-out contract, Exhibit L. Upon these and other points there is new and highly important evidence in this case. And with respect to the one point which they most fully discuss, namely, the question whether the Jackson stock was subject to the trust pro-

Digitized by Google

vision of the reorganization contracts, we repeat that we shall show, by evidence almost wholly new, that the conclusion which the supreme court arrived at is clearly untenable in the case at bar."

The evidence in this case touching the lobby contract and the sell-out contract, and the uses to which they were put in order to influence the legislature, though fuller, is not essentially different from the corresponding evidence in the trust company case, which counsel have called the "Bond Case"; and we agree with the court below "that, where there is a difference, as in the testimony of Porter, Spooner, and Peck, that difference makes rather in favor of the defendant than the plaintiff." There is certainly nothing to justify a departure from the views of the supreme court.

Upon the question which is most strenuously contested—whether the Jackson stock was subject to a trust which was violated by the transfer to Cable—the new evidence seems to be of little moment. The most that can be said of it is that it tends strongly to show that the entries on the stubs showing an issue of stock to J. C. Barnes were not made at the time they bear date, but at a much later date. An inference that the Barnes stock was not the trust stock may or may not be justified, but either way it does not follow that the Jackson stock must have been under the trust. That inference is not necessary nor admissible. The purpose to create such a trust as that provided for may have been abandoned or modified, or it may have been postponed, and allowed to go by default; but, what is more to the point, and conclusive, to impose upon the Jackson stock the conditions of the alleged trust would be distinctly inconsistent with the contract between Jackson and the railway company, evidenced by his proposition and by the resolution of acceptance, by force of which Jackson became entitled to the immediate issue and unqualified delivery to himself of the stock and bonds specified. The Price resolution, whatever the supposable purpose of its adoption, does not purport to modify, and cannot be deemed to affect, the explicit contract so executed, and in force between the parties when that resolution was adopted. It may well be conceded that the bonds and stock issued to Jackson come within the description of the bonds and stock which, according to the agreements of September 20, 1880, and January 20, 1881, were to be put in special deposit; but Jackson was not, nor were his assignors, party to, or in any way bound by, those contracts. He was therefore at liberty to exact such terms as he chose for the surrender and liquidation of his claims; and, the very explicit terms which he proposed having been accepted as they were, the attempt to import from other writings between other parties, and not referred to in his proposition or in the resolution of acceptance, inconsistent and restrictive conditions, cannot be sanctioned. The claims which Jackson surrendered were long past due, and in lieu thereof he bargained for bonds and stock to be delivered forthwith, and yet, if the position of the appellant is true, both bonds and stock were to be put in special deposit under a trust, one condition of which was that before delivery of any of the bonds, which might not happen for two years or more, past-due interest coupons should be cut off and canceled.

Digitized by Google

While further consideration of this phase of the case is not necessary, it would seem that, if the alleged trust were conceded, the transfer of the stock to Cable was not a wrong to the appellant's intestate. It is not alleged in the bill that the trust was intended for, or was of a nature to inure to, the advantage of general creditors of the Portage Company, or that Angle, before entering into his contract for the construction of the roadbed, knew of and relied upon the trust, or supposed that it could in any way affect his rights or interests. Indeed, it is upon its face a hardly credible proposition that parties planning, as were Gaylord, Schofield, and the investment company, to construct a railroad, and, under the necessity of procuring outside aid, should have put their scheme in such shape at the beginning, when their efforts were necessarily tentative, that no change of plan could be made without the consent of any creditor or contractor to whom meanwhile some liability or obligation should have been incurred. No such trust could reasonably have been intended, and none such, it is clear upon the face of the contracts, was created. To those contracts Gaylord, the investment company, and Schofield were the only parties, and, acting in good faith, it was their privilege at any time, notwithstanding the contract of Angle with the railway company, to change or annul their agreements, releasing, if they chose, bonds and stocks already impounded thereunder. The entire title and beneficial interest in the stock was confessedly in Jackson and Barnes, and, if the trust ever attached, it affected only the possession and control. In no event was it possible by mere force of the trust that Jackson and Barnes should lose, or that Angle should acquire, an interest in the stock. He had no interest, as the supreme court has already said; and if, knowing of the proposed transfer, he had sought to obtain an injunction or restraining order, he could have had no standing in court; and it is equally clear that his administratrix may not complain of the assignment or its consequences.

The averment in the bill that the Jackson stock was permitted, "by inadvertence" of the president of the company, to pass into the hands of J. C. Barnes, the vice president, is supported by no evidence. Schofield, the president, signed a formal written order for the delivery of the stock by the trust company to Barnes, and the fair inference is that he did it understandingly, on the ground that by the resolution of the board accepting Jackson's proposition an immediate delivery was obligatory, as the order recites, "without regard to any of the conditions or limitations contained or specified in said orders," according to which stock properly in trust was to be delivered.

It is contended that Jackson had no lien on the stock, but held only under a naked trust for Barnes. On the entire evidence we deem it clear that he held it as collateral security for the payment of liabilities to himself, Ruger, and Sloan, which Barnes had assumed to pay; and as a result of his relation to Ruger and Sloan he would probably have been answerable to them for the amount of their demands if he had refused or failed to accept payment in the mode proffered.

Many minor points have been discussed, but these considerations, in view of the opinions of the supreme court referred to, are deemed determinative of the case; but, it may be added, we agree with the

Digitized by Google

judge below "that the final collapse of the Portage Company in the winter of 1882 was not caused by any wrong (if wrong were conceded to have been) committed by Jackson, or J. C. Barnes, or Porter or Cable, or the Omaha Company," but was attributable, as the evidence shows beyond reasonable doubt, to other causes, for which the Omaha Company was in no way responsible. The decree below is affirmed.

GROSSCUP, Circuit Judge, by reason of sickness, did not share in the final consideration of this case.

(94 Fed. 728.)

HARRISON et al. v. FARMERS' LOAN & TRUST CO. OF NEW YORK.

(Circuit Court of Appeals, Fifth Circuit. May 31, 1899.)

No. 816.

1. CREDITORS' SUITS—RIGHT TO MAINTAIN.
   Simple-contract creditors cannot come into a court of equity to obtain a seizure of property of the debtor in satisfaction of their claims.
2. SAME—FOLLOWING STATE PRACTICE.
   This is so though a statute of the state may authorize such a proceeding in a state court.
3. SAME—DISMISSAL WITHOUT PREJUDICE.
   When a decree dismissing a bill absolutely is erroneous, in that the dismissal should be without prejudice.
4. SAME—MODIFICATION OF DECREE ON APPEAL.
   When a decree dismissing a bill absolutely is erroneous, in that the dismissal should be without prejudice, the court will modify it on appeal, though complainant does not urge the error.

Appeal from the Circuit Court of the United States for the Northern District of Texas.

J. E. Gilbert and E. B. Perkins, for appellants.

H. B. Turner and Frederick Geller, for appellee.

Before PARDEE, McCORMICK, and SHELBY, Circuit Judges.

PER CURIAM. The appellants were simple-contract creditors of the Greenville Water & Electric Light Company. Their claim had not been reduced to judgment, and they had no express lien, by mortgage, trust deed, or otherwise. It is well settled by the supreme court that such creditors cannot come into a court of equity to obtain a seizure of the property of a debtor, and its application to the satisfaction of their claims; and this, notwithstanding a statute of the state may authorize such a proceeding in the courts of the state. Hollins v. Iron Co., 150 U. S. 371, 378, 14 Sup. Ct. 127; Scott v. Neely, 140 U. S. 106, 11 Sup. Ct. 712; Cates v. Allen, 149 U. S. 451, 13 Sup. Ct. 883, 977. It follows that the demurrer was properly sustained in the circuit court.

The decree dismissing the bill was absolute, and, although the appellants have not objected on that account, it should be modified. Lacassagne v. Chapuis, 144 U. S. 119, 126, 12 Sup. Ct. 659. The

Digitized by Google

decree of the court below dismissing the bill is so modified as to declare that it is without prejudice to an action at law, or to the assertion by the appellants in the suit by the Farmers' Loan & Trust Company v. The Greenville Water & Electric Light Company of any equity they may have under the statutes of the state of Texas providing for the appointment of receivers against corporations; and as so modified the decree is affirmed.

(94 Fed. 732.)

MONONGAHELA COAL CO. v. FIDELITY & DEPOSIT CO. OF MARYLAND.

(Circuit Court of Appeals, Fifth Circuit. May 23, 1899.)

No. 817.

INDEMNITY—BREACH OF SURETYSHIP BOND—EVIDENCE.

Under a bond for indemnity given on behalf of an employé appointed as agent for the sale of merchandise on commission, which by its terms declares that its true intent and meaning are that the surety "shall be responsible for moneys, securities, or property diverted from the employer through fraud or dishonesty on the part of the employé," proof that on a settlement of accounts between them there was an indebtedness from the employé to the employer is not of itself sufficient to authorize a recovery by the employer against the surety, as such indebtedness may have been authorized by agreement between the employer and employé, or by their course of dealing, and may have been incurred without any fraud or dishonesty on the part of the employé.

In Error to the Circuit Court of the United States for the Eastern District of Louisiana.

This is an action brought by the plaintiff in error against the J. B. Donnally Company, Limited, and the defendant in error, on a bond of insurance or indemnity. The said plaintiff in error had judgment against the J. B. Donnally Company, Limited, for $6,634.15; but the circuit court directed a verdict for the defendant in error, and judgment was rendered in its favor. Whether or not the court erred in directing a verdict for the Fidelity & Deposit Company of Maryland is the question for consideration here.

The petition, leaving out formal parts, is as follows:

"First. That on the 10th day of March, 1896, it entered into a contract of agency with said defendant [the J. B. Donnally Company, Limited] to sell Pittsburg coal of plaintiff in the state of Louisiana upon the terms, under the conditions, and for the commissions set forth in the agreement thereof, made part hereof; same expiring on the 31st of December, 1896. Second. That said contract was in writing, renewed for one year to the 31st day of December, 1897, as per renewal thereof annexed hereto as part hereof. Third. That, during the course of the business relations so existing between petitioner and said defendant, certain lots of coal were sold by said defendant, the proceeds thereof collected for account of petitioner by said defendant, and not paid over, and same amount to the sum of six thousand six hundred thirty-four and $^{15}/_{100}$ dollars, with six per cent. per annum interest from the 1st October, 1897, as will more fully appear by the statements annexed as part hereof. Petitioner further represents that demand has been made upon said defendant for the payment of said sum aforesaid, without avail. Your petitioner further represents that the Fidelity & Deposit Company of Maryland, a corporation created under and by virtue of the laws of the state of Maryland, and a citizen of said state, domiciled at Baltimore, Maryland, and having a legal representative and doing business in this district, did, by its bond No. 30,901, in consideration of the premium therein expressed and paid, bind and obli-

Digitized by Google

gate itself unto your petitioner, in the sum of ten thousand dollars, that it would save. defend, and keep harmless your petitioner from and against all loss and damage whatsoever, of any nature or kind, and from all other legal costs and expenses, direct or indirect, incidental thereto, which petitioner shall or may at any time sustain or be put to in the premises, and against all and any pecuniary loss sustained by petitioner of moneys belonging to petitioner, in the possession or custody of the said J. B. Donnally Company, Limited, of New Orleans, or for the possession of which it is responsible, under their contract of agency and renewal hereinbefore set forth, which said bond is signed on the 20th of March, 1896, for a period of time of one year expiring the 20th March, 1897, and which bond was continued in full force and effect thereafter. for due consideration paid, for one year, to the 20th March, 1898, all of which will more fully and at large appear by reference to said bond and said continuation certificate, hereto annexed and made part hereof. Petitioner further represents that the amount so due and owing as aforesaid by the said J. B. Donnally Company, Limited, is a loss sustained under and by virtue of the terms and provisions of the bond, and the continuation thereof aforesaid, and has been duly demanded of the said Fidelity & Deposit Company of Maryland, which company has heretofore declined payment thereof."

The defendant's answer was a general denial, and an averment that it was not liable on the bond, except for pecuniary loss caused by the larceny or embezzlement of the employé, the J. B. Donnally Company, Limited; that the respondent was discharged from liability on the bond by reason of a false certificate given by the plaintiff that it had examined the books of the employé, and found them correct, etc.

The bond sued on is as follows:

"Whereas, the J. B. Donnally Company, Limited, New Orleans, Louisiana, hereinafter called the 'employé,' has been appointed to the position of agents in the service of the Monongahela Coal Company, Pittsburg, Pennsylvania, hereinafter called the 'employer,' and has been required to furnish a bond for his honesty in the performance of his duties in said position; and whereas, the employer has delivered to the Fidelity and Deposit Company of Maryland, a corporation of the state of Maryland, hereinafter called the 'company,' certain statements and declarations relative to the duties and accounts of the employé, the manner of conducting the business of the employer, and other matters, which, together with any statements or declarations hereafter required by or lodged with the company, do and shall constitute an essential part and form the basis of this contract: Now, therefore, in consideration of the sum of seventy-five and $^{00}/_{100}$ dollars paid as a premium for the period from March twentieth, 1896, to March twentieth, 1897, at 12 o'clock noon, and upon the faith of the said statements and declarations as aforesaid by the employer, it is hereby agreed and declared that, subject to the provisions and conditions herein contained, which shall be conditions precedent to the right on the part of the employer to recover under this bond, the company shall at the expiration of three months next after proof of a loss, as hereinafter mentioned, has been given to the company, make good and reimburse to the employer to the extent of the sum of ten thousand dollars, and no further, all and any pecuniary loss sustained by the employer of moneys, securities, or other personal property belonging to the employer in the possession or custody of the employé, or for the possession of which he is responsible, directly occasioned by larceny or embezzlement on the part of the employé in connection with the duties of the office or position in the service of the employé hereinbefore referred to, as the same have been stated in writing by the employer to the company, and occurring during the continuance of this bond, and discovered during said continuance, or within six months thereafter, or within six months from the death or dismissal or retirement of the employé from the service of the employer within the period of this bond, whichever of these events shall first happen: provided, always, that said company shall not be liable by virtue of this bond for any mere error of judgment or injudicious exercise of discretion on the part of said employé in and about all or any matters wherein he shall have been vested with discretion either by instruction or rules and regulations of the said employer. And it is expressly understood and agreed that the said company shall in no way be held

Digitized by Google

liable hereunder to make good any loss that may accrue to the said employer by reason of any act or thing done or left undone by the said employé in obedience to or in pursuance of any direction, instruction, or authorization conveyed to and received by him from said employer, or its duly-authorized officer in its behalf; and it is expressly understood and agreed that the said company shall in no way be held liable hereunder to make good any loss by fire, robbery, theft, or otherwise that said employer may sustain, except by the direct act or connivance of the said employé. The following provisions also are to be observed and binding as a part of this bond: That the company shall be notified in writing, addressed to the president of the company, at its office, in the city of Baltimore, state of Maryland, of any acts of omission or of commission on the part of the employé which may involve a loss for which the company is responsible hereunder, immediately after the occurrence of such act shall come to the knowledge of the employer. That any claim made in respect of this bond shall be in writing, addressed to the president of the company as aforesaid, immediately after the discovery of any loss for which the company is responsible hereunder, and within six months after the expiration or cancellation of this bond as aforesaid. And upon the making of such claim this bond shall wholly cease and determine, as regards any liability for any act or omission of the employer committed subsequent to the making of such claim, and it shall be surrendered to the company on payment of such claim. That if the employer shall at any time hold, concurrently with this bond, any other bond or guaranty of surety from or on behalf of the employé, the employer shall be entitled, in the event of loss by default of the employé, to claim hereunder only such proportion of the loss as the amount covered by this bond bears to the whole amount of security carried, whether valid or not. That if the company shall so elect, this bond may be canceled at any time by giving one month's notice to the employer, and refunding the premium paid, less a pro rata part thereof for the time said bond shall have been in force, remaining liable for all or any default covered by this bond which may have been committed by the said employé up to the date of such determination, and discovered and notified to the company within the limit of time hereinbefore provided for. That the employer shall, if required by the company, and as soon thereafter as it can reasonably be done, give all such aid and information as may be in its power, at the cost and expense of the company, for the purpose of prosecuting and bringing the said employé to justice, or for aiding the company in suing for and making effort to obtain reimbursement from the employé, or his estate, of moneys which the company shall have paid or become liable to pay by virtue of this bond. That the company shall not be liable under this bond for the amount of any balance that may be found due the employer from the employé, and which may have accrued prior to the date hereof, and which may be discovered within the period hereof; it being the true intent and meaning of this bond that the company shall be responsible aforesaid for moneys, securities, or property diverted from the employer through fraud or dishonesty on the part of the employé within the period specified in this bond. That this bond will become void as to any claim for which the company is responsible hereunder to the employer, if the employer shall fail to notify the company of the occurrence of such act immediately after it shall have come to the knowledge of the employer. And if, without previous notice to and consent of the company thereto, the employer has intrusted or shall intrust the employé with moneys, securities, or other personal property, after having discovered any act of dishonesty, or condones any act for which the company may be liable hereunder, or makes any settlement with the employé for any loss hereunder, this bond shall be null and void, and any willful misstatement or suppression of facts in any claim made hereunder renders this bond void from the beginning. That no suit or action of any kind against the company for the recovery of any claim upon, under, or by virtue of this bond shall be sustainable in any court of law or equity unless such suit or action shall be commenced, and the process served on the company, within the term of twelve months (365 days) next after the presentation of such claim; and, in case any suit or action shall be commenced against the company after the expiration of the said period of twelve months, the lapse of time shall be deemed as conclusive evidence against the validity of the claim thereby so attempted to be enforced. That the company, upon the execution of this bond,

Digitized by Google

shall not thereafter be responsible to the employer under any bond previously issued to the employer on behalf of said employé, and, upon the issuance of any bond subsequent hereto upon said employé in favor of said employer, all responsibility hereunder shall cease and determine, it being mutually understood that it is the intention of this provision that but one (the last) bond shall be in force at one time, unless otherwise stipulated between the employer and the company. That no one of the above conditions, or the provisions contained in this bond, shall be deemed to have been waived by or on behalf of said company unless the waiver be clearly expressed in writing, over the signature of its president and secretary, and its seal thereto affixed. And the said employé doth hereby, for himself, his heirs, executors, and administrators, covenant and agree to and with the said company that he will save, defend, and keep harmless the said company from and against all loss and damage, of whatever nature or kind, and from all legal and other costs and expenses, direct or incidental, which the said company shall or may at any time sustain or be put to (whether before or after any legal proceedings by or against it to recover under this bond, and without notice to him thereof), or for or by reason or in consequence of the company having entered into the present bond. In witness whereof, the said J. B. Donnally Company, Limited (the said employé), has hereunto set his hand and seal, and the said company has caused this bond to be signed by its president and its acting secretary, and its seal to be hereunto affixed, this twentieth day of March, one thousand eight hundred and ninety-six.

"Signed, sealed, and delivered by the said employé in the presence of

"J. B. Donnally Co., Ltd.

"[Signed] J. B. Donnally, President. [Seal.]

"Employé.

"[Signed] P. W. Dyer. [Signed] Edwin Warfield, President.

"[Signed] Tho. L. Berry, Acting Secretary. [Seal.]"

The depositions of O'Neill and Theis, officers of the plaintiff company, showed that there was found due from the employé to the plaintiff in error the sum of $6,634.15 on settlement of accounts. The bond sued on was renewed, as averred in the petition, on the 1st day of May, 1897; the renewal to begin March 20, 1897, at the expiration of the bond as first given, and to continue till March 20, 1898. O'Neill and Theis admitted that before this renewal was granted they gave the defendant in error a certificate in substance as follows:

"To the Fidelity and Deposit Company of Maryland: This is to certify that on the 17th day of March, 1897, the books and accounts of the J. B. Donnally Co., Limited, in our employ as agents, were examined by us, and we found them correct in every respect, and all moneys handled by him accounted for. He has performed his duties in an acceptable and satisfactory manner, and we know of no reason why the guaranty bond should not be continued. His salary is now commissions, and he is employed as agents.

"Dated at Pittsburg, Pa.

"[Signature] Monongahela Coal Company,

"Wm. W. O'Neill, Prest.

"April 20th, 1897."

They both testified that the books had not really been examined as stated in the certificate. Other facts are stated in the proper connection in the opinion.

The court, on request, instructed the jury to find for the defendant the Fidelity & Deposit Company of Maryland. The court said:

"The certificate must be taken as true, so far as this surety company has a right to take it, as to them, whether as a matter of fact it was false to O'Neill or not. There was nothing done by the surety company to mislead O'Neill into giving this certificate. The inclosing the blank was a mere form, but it was essential that he should give the certificate, if he expected the renewal of the contract of indemnity. Therefore he chose to give it. It may have been false that they never examined the books, but the indemnity company had a right to take the fact stated as true; and the suggestion that it was a trick of the indemnity company does not count for anything, unless it be shown that O'Neill was misled into a condition of things, which does not appear by the testimony. It was a voluntary contribution of O'Neill's. He could have de-

Digitized by Google

clined to send it, or that he would not send it, because he had not examined the books; but, when he did say that he examined the books and found them correct, the indemnity company had a right to take that fact to be true, and did take it for true, and acted upon it. Unquestionably, as between these contracting parties, O'Neill is estopped from denying that certificate, in law. He cannot be heard to deny it to screen himself from it, in law, as between the two contracting parties. Of course, that would cover all antecedent matters. But, further, the inducement to the surety company to enter into the second contract was a false inducement. That inducement was in the statement of O'Neill that he had examined the books and found them correct. I think there must be a verdict for the indemnity company."

Verdict and judgment were rendered for the defendant the Fidelity & Deposit Company of Maryland. The plaintiff in error assigns as error the instructions of the court.

W. S. Benedict, for plaintiff in error.

Harry H. Hall and P. M. Milner, for defendant in error.

Before PARDEE, McCORMICK, and SHELBY, Circuit Judges.

SHELBY, Circuit Judge, after stating the case, delivered the opinion of the court.

The bond sued on is one of indemnity, but it is a contract imposing different obligations on the several makers. The plaintiff in error is called in the bond the "employer," the defendant in error the "company," and the J. B. Donnally Company, Limited, the "employé." These terms will be used for brevity. The contract first recites that the employé "has been required to furnish a bond for his honesty in the performance of his duties in said position" (meaning as agent for the employer). After reciting the consideration, and making other recitals not material here, the agreement is that "the company shall * * * make good and reimburse to the employer, to the extent of the sum of ten thousand dollars, * * * all and any pecuniary loss sustained by the employer, of moneys, securities, or other personal property, belonging to the employer in the possession or custody of the employé, or for the possession of which he is responsible, directly occasioned by larceny or embezzlement on the part of the employé in connection with the duties of the office or position. * * *" The employer, if required by the company, is to give aid and information "for the purpose of prosecuting and bringing the said employé to justice. * * *" It is declared by its terms that the "true intent and meaning" of the bond are "that the company shall be responsible * * * for moneys, securities, or property diverted from the employer through fraud or dishonesty on the part of the employé. * * *" These provisions all relate to the obligations of the company. From them it appears that the liability of the company is restricted to claims based upon the larceny, embezzlement, or at least the dishonesty, of the employé. The obligation of the company does not cover every liability or claim which might accrue in favor of the employer and against the employé. A loss by carelessness or inattention to business might be the foundation of a just claim against the employé by the employer, which would impose no liability on the company by the terms of its obligations in the bond. If, with the consent of the employer, expressed or implied from the course of dealings between it and the employé, the latter

Digitized by Google

used or retained moneys, charging itself with them, it would be no obligation covered by the insurance or indemnity of the company. It follows, therefore, that the fact that the account between the employer and the employé shows an indebtedness from the latter to the former is not sufficient of itself to support a claim on the bond against the company. To recover in an action on a bond, defense being made, there must be an allegation of a breach of it, sustained by evidence. There is neither allegation nor proof that the employé has, through fraud or dishonesty, diverted from the employer moneys, securities, or other property, nor that it has committed larceny or embezzlement of such property. O'Neill and Theis, the only witnesses, testify that the course of business between the employer and employé was for the latter to transmit the notes of the purchasers for coal sold on credit, and subsequently out of cash sales to retain commissions on account of the sales for which the notes were given. Such dealings made it necessary to keep accounts of debit and credit. Fraud and dishonesty are not to be presumed. The law presumes that every man acts honestly, till the contrary is shown. No fact is shown tending to prove that the debt originated in the fraud or dishonesty of the employé. As late as the 20th of April, 1897, O'Neill, the president of the employer company, furnished a certificate that the employé had performed its duties in an acceptable manner, "and that we know of no reason why the guaranty should not be continued." The amount of the debt of the employé to the employer is $6,634.15. Part of this sum ($1,088.64) was collected in 1896. The remainder was collected in April and June of 1897. J. B. Donnally, Sr., the president of the employé company, died August 29, 1897. The fact that on settlement the employé owed the employer was discovered November 24, 1897, nearly three months after Donnally's death. Under the circumstances, the fact that the employé, on settlement, is found to owe the employer, is not sufficient to show that the debt originated in fraud or dishonesty, in embezzlement or larceny.

It is alleged in the petition that the company—

"Did bind and obligate itself unto your petitioner, in the sum of ten thousand dollars, that it would save, defend, and keep harmless your petitioner from and against all loss and damage whatsoever, of any nature or kind, and from all other legal costs and expenses, direct or indirect, incidental thereto, which petitioner shall or may at any time sustain."

The bond sued on does not contain this or any similar obligation on the part of the company to the employer. Such language, in substance, is in the latter part thereof, but it is the obligation of the employé (the J. B. Donnally Company, Limited) to the company (the Fidelity & Deposit Company of Maryland). That part of the bond is as follows:

"And the said employé doth hereby * * * agree that he will save, defend, and keep harmless the said company from and against all loss and damage of whatever nature and kind, and from all legal and other costs and expenses, direct or incidental. * * *"

This part of the bond is the agreement of the employé to reimburse the company if it has to pay anything to the employer by reason of

Digitized by Google

the contract. It contains no such obligation of the company to the employer.

There was no evidence, in our opinion, before the jury, to sustain the allegations of the petition, or to justify a recovery in the case. It was proper to direct a verdict for the Fidelity & Deposit Company of Maryland. The judgment of the circuit court is affirmed.

(94 Fed. 745.)

CLUNE v. RISTINE.

(Circuit Court of Appeals, Eighth Circuit. May 1, 1899.)

No. 1,032.

1. RAILROADS—OBSTRUCTION ON TRACK—NEGLIGENCE.
   A rock weighing some 200 tons, which was embedded in the face of the slope of a railroad cut along the side of a mountain, slid from its place, in the night, upon the track, and an engine attached to a train, coming in collision with it, was wrecked, and the engineer killed. The cut was through a formation known as "slide," consisting of loose boulders embedded in clay or gravel and the slope stood at an angle of about 45 degrees. The road had been built about eight years, during which time no change had been made in the slope, and the only inspections had been made by observations from passing trains or hand cars. The bank was regarded as safe by the company's engineers. There had been no recent rains, and no night patrol of the cut was being made at the time. *Held*, in an action against the railroad company to recover for the death of the engineer, that such facts did not warrant a peremptory instruction for the defendant, but that the question whether it had exercised ordinary care to construct and maintain its track in a reasonably safe condition was one for the jury.
2. DAMAGES—ACTION FOR WRONGFUL DEATH—EVIDENCE IN MITIGATION.
   In an action for wrongful death the defendant is not entitled to prove in mitigation of damages that plaintiff has received insurance on the life of the deceased from a collateral source wholly independent of defendant.

Sanborn, Circuit Judge, dissenting.

In Error to the Circuit Court of the United States for the District of Colorado.

Edmund F. Richardson (Thomas M. Patterson and Horace N. Hawkins, on the brief), for plaintiff in error.

Henry T. Rogers (Lucius M. Cuthbert, Daniel B. Ellis, and George C. Preston, on the brief), for defendant in error.

Before CALDWELL, SANBORN, and THAYER, Circuit Judges.

THAYER, Circuit Judge. This record presents the general question whether a peremptory instruction to return a verdict in favor of George W. Ristine, receiver of the Colorado Midland Railroad Company, the defendant in error and the defendant below, was properly given. At the conclusion of the plaintiff's testimony the facts which had then been established were substantially as follows: On August 21, 1894, J. B. Blocker, who was the son of Mary E. Clune, the plaintiff in error, and the plaintiff below, was employed as a railroad engineer, and

Digitized by Google

was engaged in running freight trains over the railroad of the Colorado Midland Railroad Company, between Colorado City and Leadville, Colo. On the night of that day, as he was running his train through Eleven Mile cañon, which is some distance west of Florence, Colo., and had proceeded up the cañon about eight miles, his engine came in contact with a large rock that had slid down upon the track from the slope on the south side of the track in which it had been embedded, the result being that the engine was overturned, and the plaintiff's son was instantly killed. The rock in question was a granite boulder from 22 to 25 feet long, and was found to be from 5 to 6 feet high, when it landed upon the track, and weighed many tons. The mountain on the south side of the track abreast of where the accident occurred rose at a sharp angle to the height of about one thousand feet, and the foot of the mountain had been scored away so as to form a berm, or shoulder, on which to lay the track. The river or stream which flowed through the cañon was on the north side of the track, and immediately adjacent thereto. The grading that had been done at the foot of the mountain on the south side of the stream to form the roadbed was through a formation known as "slide" or "wash," and consisted of boulders of various kinds embedded in clay or gravel. The rock which occasioned the accident slid out of the slope at the south side of the track, which had been made when the grading was done. This slope lay at an angle of about 45 degrees. The bottom of the rock as it lay in the slope before it moved was from 20 to 30 feet from the track, according to the testimony of the plaintiff's witnesses, and at a height vertically of about 6 or 7 feet above the track. In its descent it pushed out of place the track, which was there laid on a fill. It had rained a very little on the night of the accident as the train left Florence, but there had been no unusual storm or flood or seismic disturbance of any kind, either that night or for some time previously. The night of the accident was not unusually dark. The moon appears to have shone at intervals, but at the place where the accident occurred the track lay in the shadow of the mountain, which made it difficult to see. The headlight of the engine, for some reason, had not burned very brilliantly on the night of the accident. The deceased was at his post when the accident occurred, and saw the rock a moment or so before the collision, and signaled for brakes, but not in time to prevent the disaster.

The defendant did not demur to the case which was made by the plaintiff's testimony, but introduced further evidence, which was to the following effect: The railroad in question had been in operation about eight or nine years previous to the accident. After the contractors who constructed the road turned it over to the Colorado Midland Railroad Company, that company sent a gang of men into Eleven Mile cañon to dress up the track through the cañon and flatten the slopes. They left the particular slope where the accident occurred at an angle of about 45 degrees, which was deemed safe. No special examination had ever been made of the rock which eventually slid out of place, to ascertain if it was safe, except such visual examination as could be made by an inspector or engineer traveling through the cañon on a moving train or hand car. To an inspector thus travel-

Digitized by Google

ing through the cañon and viewing the rock in question, it extended lengthwise of the cut about 22 feet and up the slope about 16 feet. It was nearly half as large as a freight car, and the lower edge of the rock nearest to the track seemed to have a bearing on other broken rock. From its bottom or lower edge the rock appears to have formed the face of the slope to the height of 16 feet, but it jutted out therefrom a few feet. At its lowest point it was 5 or 6 feet higher than the track, and from 10 to 20 feet distant therefrom. Its weight was about 210 tons, and the soil in which it was embedded was known to be "wash" from the mountain. When the rock slid out of place on the night of the accident, it was found to be wedge-shaped; that is to say, the under side of the rock upon which it rested was not flat, but inclined upwards to some extent, so that it would more readily slide out of place. The chief engineer of the railroad, who had been through the cañon as often as six times a month for several years prior to the accident, and had made a visual examination of the road on such occasions, testified, in substance, that he had seen nothing at the place of the accident which led him to believe that the rock in question was insecure. Another witness testified, in substance, that it would have been impossible to tell whether the rock was insecure by sounding it with a hammer, owing to its great size, and that its peculiar wedge shape was not manifest until it had slid out of place. The testimony for the receiver further showed that about August 1, 1894, he had withdrawn the night track walkers from Eleven Mile cañon, and that from that time forward until after the accident occurred, the cañon was not patrolled but once a day, and then by daylight. This was because the rainy season was supposed to be over, and a night patrol was not deemed necessary.

Upon this showing the trial court directed a verdict for the defendant, holding, apparently, that the facts heretofore recited could not give rise to any difference of opinion, and that all reasonable men would, of necessity, agree that the defendant was without fault. We are not able to concur in that view of the case. It is an elementary rule that a railroad company is under an obligation, both to its employés and to the traveling public, to exercise ordinary care both in the construction and maintenance of its track and roadbed, to the end that they may be reasonably safe for the passage of trains; and the proper discharge of that obligation makes it the duty of a railroad company to be observant of all objects in close proximity to its track, which in the ordinary course of events may impair its safety. If rocks overhang its track, or loose rock is embedded in the slopes of cuts through which its track runs, in such a position that they may be displaced by the ordinary action of the elements, and precipitated upon its track, it should either remove them, or take other adequate precautions to guard against the danger, and render its track reasonably safe. In the case in hand we are unable to say that all reasonable men, listening to the evidence which was adduced at the trial, would have concluded that the receiver had performed his full duty with respect to caring for the safety of the track intrusted to his charge, and was not chargeable with any negligence. The rock which occasioned the accident was known to be a loose rock. It was also known

Digitized by Google

to be embedded in slide or wash on the face of a steep slope, and that it was of enormous weight. If it did not rest upon a secure foundation, it was certain to fall sooner or later, and in its descent was sure to wreck the track, and might occasion great loss, both of life and property. Besides, the continuous action of frost and floods, and the vibration caused by moving trains, would have a tendency to render it more insecure each year unless it rested upon a rock foundation. In view of these considerations, and in view of the fact that the evidence showed that the track through the cañon was not patrolled at night, although trains ran at night as well as by day, it is very probable, we think, that many persons would have reached the conclusion that in the exercise of ordinary care the defendant should have taken the precaution to have ascertained with greater certainty upon what sort of a foundation the rock rested, and should not have trusted to a visual examination, made hastily and at intervals from the platform or window of a moving train. It is manifest from what was discovered when the rock slipped from its place that the defendant would have been guilty of gross carelessness if the true nature of its foundation had been known prior to the accident, and it had been allowed to remain in the slope unsupported. Inasmuch as a demurrer to the evidence was not interposed at the conclusion of the plaintiff's evidence, the case seems to have been tried below, both by the court and counsel, upon the theory that the fall of the rock from a position in close proximity to the track, without any immediate cause except its own weight, would, in itself, warrant an inference of negligence. The receiver accordingly introduced testimony, as above stated, to rebut such inference, and to show from the appearance of the rock while in place that his servants and agents had not been guilty of any negligence. But whether the testimony thus offered in behalf of the receiver was entirely trustworthy, and whether, if in all respects true, it showed the exercise of ordinary care, and absolved the receiver from all blame, were each questions for the jury. In a given case it is generally the province of the jury to decide, in the light of their knowledge and experience, whether ordinary care has been exercised, since ordinary care is that degree of circumspection which persons of average prudence and intelligence would usually exercise under like circumstances. In a certain class of negligence cases the standard of duty has been so well defined and established by judicial decisions that a court is entitled to declare that a given act or series of acts do or do not amount to culpable negligence. But we are of opinion that the case at bar does not fall within the latter class of cases, and that it was the province of the jury to decide the questions above indicated.

On the trial of the case the plaintiff seems to have claimed that on the night of the accident there was some defect in the headlight of the locomotive, or in the oil which was being used, by reason of which fact it did not give the usual amount of light, and in that way contributed to some extent to the accident. But, as that branch of the case was not discussed on the oral argument, and as the assignments of error predicated thereon were practically abandoned, we do not consider it necessary to notice them, and shall refrain from doing so.

Digitized by Google

In the course of the trial the court permitted the defendant to prove, by way of mitigating the damages which the plaintiff might recover, that she had collected from an insurance company, after the death of her son, the sum of about $2,000, and for that reason was not entitled to recover to the full extent of her loss. An exception was taken to the admission of such evidence. We think that the testimony should have been excluded, and that the objection thereto was well taken. When an action is brought against a wrongdoer, he is not entitled to have the damages consequent upon the commission of his wrongful act reduced by proving that the plaintiff has received compensation for the loss from a collateral source wholly independent of himself. This doctrine is well established by the authorities, and is applicable to the case in hand. Suth. Dam. (2d Ed.) § 158, and cases there cited. On the second trial the evidence complained of should be excluded. The judgment below is accordingly reversed, and the case is remanded for a new trial.

SANBORN, Circuit Judge (dissenting). I am unable to resist the conclusion that there is no evidence in this case of any negligence on the part of the receiver. The test of absence of ordinary care here is: Would a man of usual prudence and sagacity have anticipated, and have taken steps to guard against, the fall of this rock, under all the circumstances of this case? The rock which slid upon the track was half as large as a car. It was so embedded in the side of the mountain that it was visible only to the extent of 18 inches. No ordinary inspection or test by the use of hammer or bar could determine that it would ever fall. The railroad had been constructed eight years before this accident occurred, and no cutting or grading or change in the face of the mountain about the rock had been made during all this time. No flood, storm, or other disturbance of the earth or of the elements occurred shortly before its fall, which might have caused it. A state of things once proved to exist is presumed to continue. When the face of a mountain is changed by grading, cutting, or filling, a duty of watchfulness and care is imposed during the first few months thereafter in order to guard against the natural effects of such acts. But the longer a rock or a mountain side remains in the same position and condition, the less becomes the need, and hence the duty, of watchfulness, until finally the probability that they will not move or change in the absence of some warning, and of some active and apparent cause, becomes conclusive. This rock had remained embedded in the mountain side unmoved through the storms and changing seasons of eight years after the railroad was built and the grading done about it, and I have been forced to the same conclusion as the trial judge that a man of ordinary prudence would not have anticipated that it would fall without apparent cause or warning, and would not have taken any steps to fasten it in its position, or to inspect it more carefully than the receiver did. An injury that could not have been foreseen or reasonably anticipated as the probable result of an act or omission lays no foundation for an action (Railway Co. v. Elliott, 12 U. S. App. 381, 386, 5 C. C. A. 347, 350, and 55 Fed. 949, 952), and it seems to me that there was no human probability that this rock would slide from its

Digitized by Google

mountain bed after it had remained in the same situation for eight years, and that no man could have anticipated its fall as the natural or probable result of a failure to inspect or secure it.

(94 Fed. 739.)

TENNENT-STRIBLING SHOE CO. v. ROPER.

(Circuit Court of Appeals, Fifth Circuit. May 23, 1899.)

No. 743.

1. SUNDAY CONTRACT—VALIDITY AS TO THIRD PARTIES—EFFECT OF RATIFICATION.

   A debtor cannot defeat the collection of a valid debt by an assignee, on the ground that it was sold and assigned to him on Sunday, in violation of the laws of the state, where the transfer was subsequently ratified by the assignor, and became binding between the parties to it; and such ratification renders it valid from the date of the actual assignment for the purpose of an attachment thereon procured by the assignee on that day.

2. JURISDICTION OF FEDERAL COURTS—AMOUNT IN CONTROVERSY.

   Where an action in a federal court is based on several accounts, exhibited with the declaration, the amount of the accounts in the aggregate is the amount in dispute, and, when it exceeds $2,000, the court is not deprived of jurisdiction, though the defendant successfully attacks the validity of the transfer of one of the accounts to the plaintiff, reducing the amount remaining below the jurisdictional limit.[1]

In Error to the Circuit Court of the United States for the Northern District of Mississippi.

Rice T. Fant, for plaintiff in error.

James Stone and C. L. Siveley, for defendant in error.

Before PARDEE, McCORMICK, and SHELBY, Circuit Judges.

SHELBY, Circuit Judge. 1. This is a suit for $2,336.64, begun by attachment by the Tennent-Stribling Shoe Company, a corporation chartered under the laws of Missouri, against W. E. Roper, a citizen of Mississippi. Of this sum $920.90 is an account which the plaintiff in error holds against the defendant in error for goods sold to him. The remainder of the sum sued for is composed of accounts which were held against the defendant in error by citizens of states, or by corporations organized and chartered in states, of which neither the plaintiff in error nor the defendant in error was a citizen. The assignee of such claims, if in the aggregate they reach the jurisdictional amount, can sue on them in the United States courts. Chase v. Roller-Mills Co., 56 Fed. 625; Bowden v. Burnham, 8 C. C. A. 248, 59 Fed. 752; Bergman v. Inman, 91 Fed. 293. Of the total sum sued for, $644.96 is an account against the defendant in error and in favor of Wm. R. Moore & Co. The other several accounts were transferred, in writing, to the plaintiff in error for a valuable consideration on the "20th of November, 1897."

[1] See note at end of case.

Digitized by Google

There is no controversy in the case, as shown in the evidence, except as to the transfer of the Wm. R. Moore & Co. account. That account is transferred in this language:

"Transfer of the account of Wm. R. Moore & Company. Nov. 20, '97. For value received, we hereby sell, transfer, and assign unto Tennent-Stribling Shoe Company, of St. Louis, Mo., the within account versus W. E. Roper.
"Wm. R. Moore & Company."

The attachment suit was brought on these several claims November 21, 1897. This was on Sunday, but the statutes of Mississippi permit the issuance and levy of attachments on Sunday. Ann. Code, § 139. A declaration was duly filed in the case. Subsequently, on the 8th of December, 1897, the defendant in the suit, W. E. Roper, moved the court to dismiss the case "because this court has no jurisdiction; because, at the time of suing out this attachment, defendant was only due or owed to the plaintiff the sum of $920.90." The case was tried and disposed of on this motion. The bill of exceptions shows that the "defendant, to sustain said motion to dismiss, by his counsel offered in evidence the declaration in attachment, with bills of particulars attached thereto, and the transfers on the bills of particulars." We have already given the contents of the transfer of the Wm. R. Moore & Co. account, dated November 20, 1897. The defendant then offered the evidence of one witness, O. C. Armstrong. His examination related alone to the transfer of the Wm. R. Moore & Co. account. Witness was a member of the firm of Wm. R. Moore & Co. To understand the case, it is necessary to give the material parts of Mr. Armstrong's statement:

"Q. What time did you actually and in fact close the sale of your firm's accounts with plaintiffs? A. That was actually done, I would say, about 4 o'clock Sunday evening, November 21st. Q. Was any part of the purchase money paid before Monday, the 22d, or on Monday, the 22d? A. No, sir. Q. Had any memoranda in writing been signed before or on Monday, the 22d of November? A. Any memoranda in writing? Q. Yes, sir,—evidencing the sale. A. No, sir. Q. I believe you stated in your direct examination that your firm owned the account after it was transferred to the plaintiff up until Monday, November 22d. Please explain what you mean when you state that your firm were the owners of the account until that day. A. When I made that statement, I forgot a telegram that passed Sunday evening, and I now remember that it did secure it Sunday evening. I was merely mistaken. Q. Then the sale was made on Sunday, was it not? A. Yes, sir. Q. When did you first deliver your account to the agent of the Tennent-Stribling Shoe Company, or the plaintiffs? A. I don't know, sir. It was done as soon as the clerks could make it out and put it in order. Q. That was some time after the 22d of November, was it not? A. Yes, sir."

On cross-examination, Mr. Armstrong testified that on the evening of November 20th he went on the train with Mr. Fant, the attorney for the plaintiff in error, to Byhalia; that the trip was made to investigate W. E. Roper's affairs; that witness had with him an itemized statement of the account of Wm. R. Moore & Co. against W. E. Roper; that it was on that evening agreed that the plaintiff in error could buy the account for 50 cents on the dollar (witness referred to this agreement as an "option"); that the option was finally closed on Sunday evening.

On this evidence, the court granted the motion, dismissed the cause, taxed the plaintiff with the costs, and ordered that certain

Digitized by Google

moneys in court (the proceeds of the sale of part of the attached property) be paid to the defendant, W. E. Roper. The several assignments of error are directed to the action of the court in dismissing the case and entering the judgment described.

It is claimed by the defendant in error that the transfer of the Wm. R. Moore & Co. account was made in violation of the Sunday laws, and that such transfer is therefore void. It is a misdemeanor in Mississippi to engage in work on Sunday. Ann. Code, § 1291. Mr. Armstrong testifies that he and the plaintiff in error's attorney had a conversation on Saturday about the sale of the claim. It seems that the effect of the conversation was that the plaintiff in error was to have the account, if he wished to take it, at 50 cents on the dollar. This agreement is referred to by the witness as an "option." On Sunday there was evidently further communication on the subject, and on direct examination the witness says, in effect, that the account was not drawn off till some days later, probably about the 22d of November, and that the sale was not completed till 4 o'clock Sunday afternoon, November 21st. But, on cross-examination, the witness says that he had the account with him itemized on Saturday, the 20th, at the time of the conversation with plaintiff's attorney. The account offered in evidence is transferred on "November 20th." If this is not the true date of the written transfer, no date is given by the evidence. We are not unmindful of the fact that the witness holds to the proposition that the sale was not concluded, as he understood it, till Sunday afternoon; but the date of the written transfer would indicate that the telegraphic correspondence on Sunday was to ratify what was already done. If it be conceded that the transfer was made on Sunday, we cannot agree that the defendant in error can take advantage of it. The action is not brought on the contract of assignment. The defendant in error is not a party to the contract of assignment. His contract was with Wm. R. Moore & Co. to pay the account. That account, with the other claims, is now the property of the plaintiff in error. It sues on the account. The assignment of it is the means by which it became the owner of it. If it was assigned to it on Sunday, if the assignor afterwards ratified the assignment, and the assignee claims under it, it is binding between them. A third person, not a party to the contract of assignment, should not be permitted to avoid the payment of the debt by pleading the illegality of a contract that can be and is ratified by the parties to it. The defendant in error could not be again made to pay it if this assignee recovers it. No one else claims, or can successfully claim, the debt. A member of the firm of Wm. R. Moore & Co. was in court as a witness, ratifying and approving the assignment. If the defendant in error can defeat the collection of the claim of the plaintiff in error, then no one can collect it. As both the assignor and the assignee are satisfied with their contract, and the same having become executed by the payment of the purchase money and the delivery of the account with the written assignment, the defendant in error, who is not a party to it, and whose contract is not subject to any infirmity, should not be permitted to appeal to the Sunday

Digitized by Google

laws to avoid the payment of his own legal obligations. The intention with which these laws were enacted will be better promoted by not permitting their use to be extended to defeat just obligations not contracted on Sunday. A third person, not a party to the contract of assignment, cannot dispute its validity on the ground that it was made on Sunday. Richardson v. Kimball, 28 Me. 463; Foster v. Wooten, 67 Miss. 540, 7 South. 501; Adams v. Gay, 19 Vt. 358.

2. The following is a statement of the claims sued on, as appears by the record:

Exhibit A, Tennent-Stribling Shoe Company	$ 920 90
Exhibit B, Wm. R. Moore & Co	644 96
Exhibit C, Memphis Grocery Company	488 35
Exhibit D, Goodman Bros	129 75
Exhibit E, Marks & Fader	152 68
Aggregate	$2,336 64

The plaintiff is the original owner of the first account, and the others are transferred to it as before stated. The affidavit is made to secure an attachment to collect these claims, the writ is issued and levied, and declaration filed, each showing an amount, in the aggregate, within the jurisdiction of the circuit court. If it be conceded that the evidence in the case shows that the plaintiff, for some reason, cannot maintain its title to, or right to recover on, one of the accounts, and that deducting that account from the aggregate of the amounts sued for reduces the sum below $2,000, does such evidence defeat the jurisdiction of the circuit court? The circuit court so held. Concluding that the plaintiff's title to the Wm. R. Moore & Co. account was defective, and deducting that sum from the aggregate, it reduced the amount for which plaintiff could obtain judgment below $2,000, and the court therefore dismissed the case for want of jurisdiction. Unless the matter in dispute in a case exceeds $2,000, the court is without jurisdiction. In Lee v. Watson, 1 Wall. 339, the court said:

"By 'matter in dispute' is meant the subject of litigation,—the matter for which the suit is brought,—and upon which issue is joined, and in relation to which jurors are called and witnesses examined. In an action upon a money demand, where the general issue is pleaded, the matter in dispute is the debt claimed, and its amount as stated in the body of the declaration."

In discussing the question of appellate jurisdiction, in Hilton v. Dickinson, 108 U. S. 166, 2 Sup. Ct. 424, the court held: "The amount stated in the body of the declaration * * * must be considered in determining the question of jurisdiction." Cases of course do arise when the amount stated in the declaration would not govern, as, for example, a suit for $15,000 damages for the breach of a $1,000 bond. The amount of the bond would be the limit of the recovery, and so the extent of the matter in dispute. In an action, however, on accounts exhibited with the declaration, the amount of the accounts in the aggregate is the amount in dispute. The fact that some defense may be made, or is, in fact, made, which will make the recovery fall below the jurisdictional amount, does not defeat the jurisdiction of the court. It occurs in the practice that judgments are some-

Digitized by Google

times entered for a less sum than suit could have been brought for. Statutory provision as to costs is made for such cases:

"When, in a circuit court, a plaintiff in an action at law originally brought there * * * recovers less than the sum or value of five hundred dollars, exclusive of costs, in a case which cannot be brought there unless the amount in dispute, exclusive of costs, exceeds said sum or value, * * * he shall not be allowed, but, at the discretion of the court, may be adjudged to pay, costs." Rev. St. U. S. § 968.

This statute, at least, shows that the congress does not so construe the statutes conferring jurisdiction on the court that the same will be defeated, if, by defense, the amount claimed in the action should be reduced below $2,000. In Hardin v. Cass Co., 42 Fed. 652, a suit was brought for a sum exceeding the jurisdictional amount. The statute of limitations was successfully pleaded as to part of the claim. This part of the suit being defeated, the amount left collectible was less than the jurisdictional amount. The defendant insisted that the case should be dismissed. The court, however, granted judgment for the remainder of the claim, although it was for less than $2,000. The case of Green v. Liter, 8 Cranch, 106, was a suit for a large tract of land, alleged to exceed the value which then fixed the jurisdiction of the court. The recovery was for less in value. Mr. Justice Story, delivering the opinion of the court, said:

"As to the first question, we are satisfied that the circuit court had jurisdiction of the cause. Taking the eleventh and twentieth sections of the judicial act of 1789 (chapter 20) in connection, it is clear that the jurisdiction attaches when the property demanded exceeds $500 in value; and if, upon trial, the demandant recovers less, he is not allowed his costs, but, at the discretion of the court, may be adjudged to pay costs."

See, also, Levinski v. Banking Co., 34 C. C. A. 452, 92 Fed. 449.

The judgment of the circuit court is reversed, and the cause remanded, with direction to reinstate said cause on the docket, and to proceed in conformity with this opinion; and it is so ordered.

NOTE.

Jurisdiction of Circuit Courts as Determined by the Amount in Controversy.[1]

I. The Matter in Dispute.

1. Creditors' Suits.

[a] (U. S. C. C. A. 8th Circuit, 1898) Where a judgment creditor whose judgment exceeds $2,000 has filed a creditors' bill in a federal court in behalf of himself and all other creditors who desire to come in, to reach and subject a special fund alleged to have been acquired by a third party in fraud of the rights of the creditors of the judgment defendant, and the court has acquired jurisdiction over such fund, it has jurisdiction to entertain a petition of intervention by another creditor desiring to become a party to the bill, and claiming an interest in the fund, though the amount of his judgment is less than $2,000; the provision of the judiciary act limiting the right to sue in a federal court to cases which involve $2,000, exclusive of interest and costs, not applying to such a case.—Bank v. Allen, 33 C. C. A. 169, 90 Fed. 545.

[b] (U. S. C. C. Tenn. 1897) In a suit in behalf of all creditors to administer a trust fund, the amount of the fund is the amount in controversy for purposes of jurisdiction.—Putnam v. Carpet Co., 79 Fed. 454.

---

[1] Supplementary to note to Auer v. Lombard, 19 C. C. A. 75.

Digitized by Google

[c] (U. S. C. C. Wash. 1897) In a suit by a creditor of an insolvent national bank, in behalf of himself and all other creditors, to enjoin the receiver and the comptroller from paying dividends on an alleged fraudulent claim which has been allowed by them, the jurisdictional amount is to be determined solely by the amount of complainant's own claim, and not by the aggregate of all the claims of those whom he assumes to represent, or by the amount of the dividends, payment of which is sought to be enjoined.—Smithson v. Hubbell, 81 Fed. 593.

[d] (U. S. C. C. W. Va. 1898) To give the circuit court jurisdiction to appoint a receiver for a corporation at the suit of a stockholder, it must appear that the amount in controversy, or the par value of the complainant's stock, equals $2,000.—Robinson v. Loan Co., 90 Fed. 770.

[e] (U. S. C. C. Ark. 1899) In a creditors' suit, the amount claimed by the creditor against the judgment debtor determines the jurisdiction, and not the value of the property held by the debtor's alleged fraudulent assignee.—Grocery Co. v. Richesin, 91 Fed. 79.

2. Injunction Proceedings—In General.

[a] (U. S. C. C. Kan. 1868) Jurisdiction on ground of diverse citizenship will not be taken of a suit by a nonresident taxpayer to enjoin the issue of county bonds, unless complainant's liability is shown to exceed $500.—Adams v. Douglas Co., Fed. Cas. No. 52 [1 Kan. 627].

[b] (U. S. C. C. S. C. 1896) When the complainant's bill asserts an interest in property worth $33,000, by reason of having become responsible therefor under policies of insurance, and alleges that such property will be wholly lost to him through action of the defendants which it is sought to restrain, the amount in controversy is that claimed by the complainant, and the jurisdiction of the circuit court is not defeated by a contention on the part of the defendant that, under the allegations of the bill, the complainant's claim is less than $2,000.—Insurance Co. v. Svendsen, 74 Fed. 346.

[c] (U. S. C. C. Tenn. 1897) In a suit for an injunction the amount in dispute is not determined by the amount which complainant might recover at law for the acts complained of, but by the value of the right to be protected or the extent of the injury to be prevented, by the injunction.—Railway Co. v. McConnell, 82 Fed. 65.

[d] (U. S. C. C. Ark. 1899) The amount involved in a suit for an injunction, for the purpose of determining the jurisdiction of a federal court, is the value of the right to be protected, or the extent of the injury to be prevented, by the injunction.—Humes v. City of Ft. Smith, 93 Fed. 857.

3. —— Enjoining Collection of Tax.

[a] (U. S. Sup. 1891) Where a bill by many taxpayers of Muhlenburg county, Ky., in behalf of all taxpayers, attacks the validity of certain county bonds issued to aid in constructing a railway, and prays an injunction restraining the sheriff from collecting a tax levied for the payment of interest and the county judge from making any further levies, and also a decree that the bonds are invalid, and that all the holders be brought in by publication and perpetually enjoined from collecting principal or interest, the main controversy is as to the validity of the bonds, and therefore is not separable, as determining the jurisdictional amount, into controversies affecting the amount due from the separate taxpayers.—Brown v. Trousdale, 11 Sup. Ct. 308, 138 U. S. 389.

[b] (U. S. Sup. 1896) A circuit court has no jurisdiction of a suit by a telegraph company against the clerks of different counties to enjoin the collection of taxes on its line in each of such counties, when the bill does not show that the amount of any one of the distinct county assessments equals the jurisdictional amount of $2,000.—Fishback v. Telegraph Co., 16 Sup. Ct. 506, 161 U. S. 96.

[c] (U. S. Sup. 1896) In a suit by a bank to enjoin the collection of taxes for certain years on property claimed to be exempt, the amount of the tax being insufficient to give jurisdiction, the fact that the value of the exemption during the continuance of the charter of the bank will exceed the jurisdictional amount will not give jurisdiction.—Bank v. Cannon, 17 Sup. Ct. 89, 164 U. S. 319, 41 L. Ed. 451.

Digitized by Google

[d] (U. S. Sup. 1896) Where it is sought to enjoin the collection of taxes for certain years, and there is evidence of the amount of taxes for but one of such years, it will not be assumed, to make up the jurisdictional amount, that a like tax was assessed for each of the other years.—Bank v. Cannon, 17 Sup. Ct. 89, 164 U. S. 319, 41 L. Ed. 451.

[e] (U. S. Sup. 1896) Jurisdiction cannot be conferred on a court to enjoin the collection of taxes assessed in several parishes by joining in one bill, against the different collectors, the whole amount of such taxes, the separate assessments not being sufficient to give jurisdiction.—Bank v. Cannon, 17 Sup. Ct. 89, 164 U. S. 319, 41 L. Ed. 451.

[f] (U. S. C. C. Ky. 1896) The federal courts have equity jurisdiction, on the ground of preventing multiplicity of suits and irreparable injury, of a bill by a telegraph company to enjoin a state auditor from certifying to the county clerks the proportions of an illegal tax to be collected in their several counties, though such local taxes, taken separately, are less than $2,000.—Telegraph Co. v. Norman, 77 Fed. 13.

[g] (U. S. C. C. Ky. 1896) The circuit court has jurisdiction, where the citizenship is diverse, of a bill by a telegraph company to enjoin a state auditor from collecting alleged illegal state taxes, and from certifying to the county clerks the proportion of local taxes to be collected in each county, where the amount claimed to be due the state and the agregate amount of such local taxes each exceeds $2,000.—Telegraph Co. v. Norman, 77 Fed. 13.

4. Patents and Trade-Marks.

[a] (U. S. C. C. Minn. 1894) Stat. 1881, giving the right to commence suit, in a trade-mark case, without alleging the amount in controversy, is not repealed by the statute of 1887–88, requiring the amount involved to be $2,000, to give the federal court jurisdiction.—Glotin v. Oswald, 65 Fed. 151.

[b] (U. S. C. C. Pa. 1896) Where an action is brought upon a single agreement based upon the use of three distinct patents, it is unimportant for the purpose of giving jurisdiction of the suit that the sum claimed to be due on any one of the patents does not exceed $2,000, provided that the total sum claimed upon all three patents does.—Weaver v. Tack Co., 80 Fed. 700.

[c] (U. S. C. C. Cal. 1898) In a suit to enjoin the further infringement of a trade-mark, and for an accounting, the amount in controversy is the value of the trade-mark to be protected, and not the amount of damages which may have been sustained.—Hennessy v. Herrmann, 89 Fed. 669.

5. Quieting Title and Eviction.

[a] (U. S. Sup. 1895) Where an evicted grantee sues the grantor in Nebraska for $6,000 damages, the amount in controversy, exclusive of interest and costs, exceeds $2,000, though the price paid by plaintiff for the land was only $1,200, and the law of such state, in case of eviction, imposes a responsibility only for the return of the price, with interest thereon.—Brown v. Webster, 15 Sup. Ct. 377, 156 U. S. 328.

[b] (U. S. C. C. A. 9th Circuit, 1899) In a suit to quiet title, it is not the value of defendant's claim that constitutes the amount in controversy; it is the value of the whole of the real estate to which the claim extends.—Woodside v. Ciceroni, 35 C. C. A. 177, 93 Fed. 1.

. *Mortgages.*

[a] (U. S. C. C. A. 6th Circuit, 1896) A bill which prays for the cancellation f a mortgage for $2,120 states a case within the jurisdiction as to amount f the circuit court, for the purpose of removal, and of which jurisdiction will e retained, though subsequent stipulations as to facts reduce the actual nount in controversy to a sum not over $2,000.—Riggs v. Clark, 18 C. C. A. 12, 71 Fed. 560.

[b] (U. S. C. C. Ga. 1896) When a deed is given for the purpose of secur- g a debt, under the Georgia statutes, the mortgagee, independently of any press stipulation in the accompanying bond for reconveyance, has a right pay the premium for proper insurance of the property conveyed, and to llect the same, as a part of the amount secured by the deed; and accordly, in a suit for the foreclosure of such a security, the amount of insurce premiums paid by the mortgagee is properly included with the principal,

Digitized by Google

in estimating the amount involved, for the purposes of the jurisdiction of the United States circuit court.—Coolidge v. Ray, 75 Fed. 39.

[c] (U. S. C. C. S. C. 1897) In a suit to foreclose a chattel mortgage, the amount in controversy, as affecting the jurisdiction, is not determinable by the value of the property mortgaged.—Stillwell-Bierce & Smith-Vaile Co. v. Williamston Oil & Fertilizer Co., 80 Fed. 68.

7. Actions on Bonds.

[a] (U. S. C. C. Pa. 1822) The court has jurisdiction in debt on a bond for the penalty of $1,000, though it appears that less than the jurisdictional amount is involved.—Postmaster General v. Cross, Fed. Cas. No. 11,306 [4 Wash. C. C. 326].

[b] (Tex. Sup. 1898) A petition alleged that defendant claimed $3,200 on a bond executed by plaintiff for that amount, which was secured by a trust deed upon her land; that the bond was really given for a loan of $1,375.80; that by the payment of usurious interest, which should be applied on the principal, it had been reduced to $723; that plaintiff was entitled to $652 as penalty for usury; that defendant had sold the land under the trust deed. The prayer was for cancellation of the sale and lien, and for judgment for the penalty. Defendant filed a general denial. The sale and lien were set aside, and judgment entered for plaintiff for $336. *Held*, that the amount in controversy was $3,200.—Association v. Cunningham, 47 S. W. 714.

8. Negligence and Conversion.

[a] (U. S. C. C. A. 7th Circuit, 1897) Jurisdiction of an action for conversion is not lost by reason of the finding that the goods were worth less than the jurisdictional amount, where there is no reason to believe that the value was overstated in the declaration for the purpose of conferring jurisdiction.—Jones v. Machine Co., 27 C. C. A. 133, 82 Fed. 295.

[b] (U. S. C. C. Or. 1898) Where a suit is upon a demand on which the law liquidates the damages, the amount so liquidated, and not the amount claimed in the complaint, constitutes the matter in dispute; hence in a suit for conversion of property on which plaintiff claimed liens, where the several liens are specifically set out, and they aggregate less than $2,000, without interest, a federal court is without jurisdiction, although the amount claimed is the amount of a judgment recovered on such claims against the debtor, which includes interest and other expenses, and exceeds $2,000, but to which judgment the present defendants were not parties.—Bergman v. Inman, Poulsen & Co., 91 Fed. 293.

[c] (N. D. Sup. 1892) The amount demanded in the complaint, in an action for damages caused by negligence, controls in determining whether the matter in dispute exceeds the sum or value of $2,000, exclusive of costs and interest, on application to remove the cause to the federal court on the ground of diverse citizenship, although the value of the property destroyed by the negligence is alleged in the complaint to be greater than $2,000.—Smith v. Railroad Co., 53 N. W. 173, 3 N. D. 17.

[d] (Tex. Civ. App. 1896) An action against a United States marshal for the wrongful seizure and conversion of property, under execution issued by a federal court, is not removable to the United States circuit court where the amount of damages laid in the petition is $1,016.—Hunt v. Hardin, 36 S. W. 1028, 14 Tex. Civ. App. 285.

9. Replevin.

[a] (U. S. Sup. 1898) An action of replevin for liquors valued at $1,000, brought in a state where consequential damages are not recoverable in such actions, does not involve the requisite amount to give a federal court jurisdiction, though special damages for injury to plaintiff's trade and business are claimed in a large sum.—Vance v. W. A. Vandercook Co., 18 Sup. Ct. 645, 170 U. S. 438.

10. Suits by Receivers.

[a] (U. S. C. C. Cal. 1897) In a suit by a receiver of a water company to establish an alleged right to fix rates to consumers, the jurisdictional amount is to be determined by the value of the right, and not merely by the difference

Digitized by Google

between the rates contended for by defendants and complainant respectively. —Lanning v. Osborne, 79 Fed. 657.

[b] (U. S. C. C. Cal. 1899) To confer jurisdiction on a federal court of a suit brought by a receiver of another court, though, by reason of the fact that he is the receiver of a federal court, the suit be regarded as one arising under the laws of the United States, it is essential that it should involve the jurisdictional amount of $2,000.—Sullivan v. Swain, 96 Fed. 259.

11. Administration Proceedings.

[a] (Ala. Sup. 1892) In a suit by a part of the distributees and heirs at law of an intestate against his administrator, whether the amount involved was sufficient to give jurisdiction to the United States circuit court should be determined by the amount of the fund in the hands of the administrator for distribution, and not by the separate sums decreed to the several distributees. —Thornton v. Tison, 10 South. 639, 95 Ala. 589.

II. Interest and Attorney's Fees.

[a] (U. S. Sup. 1896) When the interest evidenced by a coupon is due, the demand based on the promise contained in the coupon is no longer a mere incident of the principal debt, but becomes a principal obligation, and hence is not "interest," within Act March 3, 1887, conferring jurisdiction on the circuit court of suits between citizens of different states when the matter in dispute exceeds $2,000, exclusive of "interest" and costs; and the amount of such coupons may be added to the amount of the bond to confer jurisdiction.—Edwards v. Bates Co., 16 Sup. Ct. 967, 163 U. S. 269.

[b] (U. S. C. C. A. 5th Circuit, 1897) In an action on negotiable bonds which have matured, together with the coupons, neither the interest on the bonds after maturity, nor the interest on the coupons after their maturity, constitutes a part of the matter in dispute, in determining the jurisdiction of the circuit court.—Greene Co. v. Kortrecht, 26 C. C. A. 381, 81 Fed. 241.

[c] (U. S. C. C. Ky. 1896) Where, by express stipulation, valid in the state where made, a debtor becomes liable for a reasonable attorney's fee in case the debt is collected by suit, such fee may be added to the amount of the debt, for the purpose of making up the jurisdictional amount. Such a fee is not a part of the costs which are to be excluded under the judiciary act of 1887-88.—Rogers v. Riley, 80 Fed. 759.

III. Joinder of Parties and Claims.

[a] (U. S. C. C. Kan. 1868) An allegation, in a suit to enjoin a county tax, that complainant sues "on behalf of all others similarly situated," will not give jurisdiction where it does not appear that complainant's liability exceeds $500.—Adams v. Douglas Co., Fed. Cas. No. 52 [1 Kan. 627].

[b] (U. S. C. C. Or. 1898) An assignee of choses in action aggregating over $2,000 may maintain a suit thereon if his assignees were citizens of different states from the defendant, though they could not have maintained separate suits, because none of the claims singly was sufficient in amount.—Bergman v. Inman, Poulsen & Co., 91 Fed. 293.

[c] (Ill. Sup. 1899) Two of several tenants in common, who are nonresidents, and who have been joined with their resident co-tenants and the resident mortgagee of the interest of one of them, in condemnation proceedings, are not entitled to a removal of the proceedings to the United States circuit court when the aggregate of their claims exceeds the sum of $2,000, but the amount of their separate claims is less than that amount.—Trotier v. Railway Co., 54 N. E. 487, 180 Ill. 471.

IV. Counterclaim or Other Defense.

[a] (U. S. D. C. Alaska, 1895) The court is not deprived of jurisdiction of an action, the amount claimed in which does not exceed the jurisdictional amount, by the filing of a counterclaim for a sum exceeding the aggregate amount of plaintiff's claim and the jurisdictional amount.—Bennett v. Forrest, 69 Fed. 421.

[b] (U. S. C. C. Utah, 1896) A counterclaim, of a class which defendant is required by local statute to present in the original action, on pain of being

Digitized by Google

forever barred from litigating it (Code Civ. Proc. Utah, § 3228), is a part of the matter in dispute, and is to be added to the sum sued for by plaintiff, in determining the jurisdictional amount.—Lee v. Insurance Co., 74 Fed. 424.

[c] (U. S. C. C. S. C. 1897) When the amount claimed exceeds the jurisdictional amount, but defendant sets up a payment reducing the sum below that amount, the court has jurisdiction if, in order to ascertain the amount actually in controversy, it must consider conflicting testimony, or decide disputed questions of law.—Stillwell-Bierce & Smith-Vaile Co. v. Williamston Oil & Fertilizer Co., 80 Fed. 68.

[d] (Ga. Sup. 1898) Where, in an action involving the title to realty, the plaintiff claimed the same without making a payment to one of the defendants of the sum of $2,200, which payment the latter claimed, the action was one involving more than $2,000 and was removable to the United States courts.—Withers v. Bank, 30 S. E. 766, 104 Ga. 89.

V. SUIT BY ASSIGNEE IN BANKRUPTCY.

[a] (U. S. C. C. Kan. 1877) Suits may be brought in the circuit courts of the United States by assignees in bankruptcy without reference to the amount or value in controversy.—Payson v. Coffin, Fed. Cas. No. 10,858 [4 Dill. 386].

VI. PLEADING AND PRACTICE.

[a] Where jurisdiction depends upon the amount involved, it is to be determined by the amount of damages laid in the declaration, and not the amount of recovery.

—(U. S. C. C. Pa. 1796) Hulsecamp v. Teel, Fed. Cas. No. 6,862 [2 Dall. 358]; (1810) Muns v. De Nemours, Fed. Cas. No. 9,931 [2 Wash. C. C. 463]; (1878) Machine Co. v. Mingus, Fed. Cas. No. 16,936; (C. C. Mich. 1842) Sherman v. Clark, Fed. Cas. No. 12,763 [3 McLean, 91].

(Ark. Super. Ct. 1833) Murphy v. Howard, Fed. Cas. No. 9,949a [Hempst. 205].

[b] (U. S. Sup. Ct. 1897) Recitals in an agreed statement of facts in a suit to enjoin state officers from seizing liquors imported by plaintiff, that defendants had seized, and intended and threatened to seize in the future, all liquors imported, and that the value of the right to import liquors exceeded $2,000, are a concession that the value of plaintiff's rights in controversy is sufficient to give jurisdiction.—Scott v. Donald, 17 Sup. Ct. 262, 165 U. S. 107, 41 L. Ed. 648.

[c] (U. S. Sup. 1897) Where the jurisdiction of a federal court of a claim for damages in excess of the jurisdictional amount has once attached, it is not defeated by the fact that recovery is had for less than the jurisdictional amount.—Scott v. Donald, 17 Sup. Ct. 265, 165 U. S. 58, 41 L. Ed. 632.

[d] (U. S. Sup. 1898) A bill by a building and loan association, to foreclose a mortgage securing a contract under which the association loaned or advanced to a shareholder $2,000 in anticipation of the maturity of his shares, and by which the latter agreed to pay interest thereon and the monthly dues on the shares until they reached the par value of $4,000, or, in case of default in payment of such dues, to pay the association $4,000 less the dues previously paid, which alleges a default, and that but $1,200 in dues has been paid, shows on its face that the matter in dispute exceeds the amount of $2,000 exclusive of interest and costs.—Association v. Price, 18 Sup. Ct. 251, 169 U. S. 45.

[e] (U. S. Sup. 1898) A suit cannot properly be dismissed by a circuit court as not substantially involving an amount sufficient to give it jurisdiction, unless the facts, when made to appear on the record, create a legal certainty of that conclusion.—Wetmore v. Rymer, 18 Sup. Ct. 293, 169 U. S. 115.

[f] (U. S. Sup. 1898) When, from the nature of the case as stated in the plaintiff's pleading, there would not legally be a judgment for an amount necessary to the jurisdiction of a United States court, jurisdiction cannot attach, though the damages are laid in a larger sum.—Vance v. W. A. Vandercook Co., 18 Sup. Ct. 645, 170 U. S. 468.

[g] (U. S. C. C. A. 6th Circuit, 1898) In determining whether the matter in dispute exceeds $2,000, the principle to be applied is that, where the law gives no rule, the plaintiff's demand, unless colorable, must furnish one, but where the law does give the rule, the legal cause of action, and not the plaintiff's

Digitized by Google

emand, must be regarded.—Hayward v. Manufacturing Co., 29 C. C. A. 438, 5 Fed. 4.

[h] (U. S. C. C. A. 6th Circuit, 1898) Although, where the law gives no rule, he amount of damages laid in the declaration is not conclusive, yet, if there night be a recovery for the necessary amount, jurisdiction cannot be defeated, nder the act of March 3, 1875, unless the court find, as a matter of fact, that he amount of damages stated in the declaration was colorable.—Hayward v. Manufacturing Co., 29 C. C. A. 438, 85 Fed. 4.

[i] (U. S. C. C. A. 6th Circuit, 1898) What would be a colorable enlargement of a demand, where the law gives no fixed rule, depends on the facts of the particular case.—Hayward v. Manufacturing Co., 29 C. C. A. 438, 85 Fed. 4.

[j] (U. S. C. C. A. 8th Circuit, 1898) In a suit to foreclose a mortgage securing the sum of $2,000, the bill alleged that plaintiff advanced an additional $2.25 to pay the fee for recording the mortgage, "for which defendant is liable to him." *Held*, that the averment of liability was a mere conclusion of law, and that the bill therefore failed to show that more than $2,000 was involved. —Less v. English, 29 C. C. A. 275, 85 Fed. 471.

[k] (U. S. C. C. Mo. 1872) The amount in dispute is the sum of the claims in all the counts upon causes of action which are properly joined.—Judson v. Macon Co., Fed. Cas. No. 7,568 [2 Dill. 213].

[l] (U. S. D. C. Ark. 1877) The amount stated in the body of the complaint, and not that in the prayer for judgment, will determine the amount in dispute in an action on a money demand.—Culver v. Crawford Co., Fed. Cas. No. 3,468 [4 Dill. 239].

[m] (U. S. C. C. Mich. 1896) While, ordinarily, in cases where the damages in controversy are uncertain in amount, a distinct allegation that the necessary sum or value is involved will be accepted by the court, yet if the allegation, from the nature of the case, appears to be merely colorable, and without any reasonable foundation in the facts, it will be treated as insufficient.—American Wringer Co. v. City of Ionia, 76 Fed. 6.

[n] (U. S. C. C. Utah, 1897) Where the complaint on its face shows that the amount in dispute exceeds $2,000, and there are no facts alleged from which the court can determine, as a matter of law, that there cannot be a recovery of the jurisdictional amount, the question will not be determined on ex parte affidavits.—Holden v. Machinery Co., 82 Fed. 209.

[o] (U. S. C. C. Utah, 1897) It seems that since Act March 3, 1875, the court is not concluded on the question of jurisdiction by the amount laid in the complaint; and if, at the trial, that amount should appear, from the testimony of plaintiff and his witnesses, to have been laid beyond his reasonable expectation of recovery, the action should be dismissed.—Holden v. Machinery Co., 82 Fed. 209.

[p] (U. S. C. C. N. C. 1898) A bill against a corporation and certain of its stockholders to set aside alleged purchases of stock by the latter with corporate funds, and to enjoin the voting of such stock, filed by complainant as a stockholder in behalf of himself and all other stockholders who desire to intervene, and which alleges that complainant is the owner of "divers shares" of the stock of such corporation, but from which the amount or value of his holding does not appear, fails to show that the amount in controversy is sufficient to give a federal court jurisdiction.—Harvey v. Railroad Co., 89 Fed. 115.

[q] (U. S. C. C. Va. 1898) A bill to obtain possession and establish title to certain corporate stock, which alleges the amount of stock in controversy to be 153 shares, of the par value of $100 each and of greater market value, shows on its face that the amount in controversy exceeds $2,000.—Ryan v. Railroad Co., 89 Fed. 397.

[r] (U. S. C. C. Cal. 1899) The relief sought by a bill was the tearing down and rebuilding of a wall on defendant's lot, alleged to encroach upon complainant's building on the adjoining lot by reason of being out of plumb, and the recovery of damages for injury caused thereby to complainant's building. The evidence taken on an issue joined on a plea to the jurisdiction of the court showed that the removal and rebuilding of defendant's wall would cost not less than $900, and complainant laid the damages for injury to his building at $2,700. *Held* that, in the absence of evidence showing such claim to be

Digitized by Google

colorable or fictitious, the matter in dispute exceeded $2,000.—Von Schroeder v. Brittan, 93 Fed. 9.

VII. For Purpose of Removal from State Court.

[a] (U. S.) In order that defendant may remove a cause from a state to a federal court on account of prejudice or local influence, under Act Aug. 13, 1888 (25 Stat. 435) § 2, cl. 4, the matter in dispute must exceed the sum or value of $2,000, the jurisdictional amount required by the first clause of the act.—(Sup. 1890) Ex parte Pennsylvania Co., 11 Sup. Ct. 141, 137 U. S. 451; (C. C. A. 6th Circuit, 1894) Tod v. Railway Co., 12 C. C. A. 521, 65 Fed. 145.

[b] (U. S. C. C. A. 6th Circuit, 1898) The fact that the first count of a declaration is for an agreed compensation amounting to only $2,000, or less, does not defeat a removal to the federal court, if there are other counts so framed that, in case of failure to establish the specific agreement, it is legally possible for plaintiff to recover a sum exceeding $2,000 as the reasonable value of the services rendered.—Hayward v. Manufacturing Co., 29 C. C. A. 438, 85 Fed. 4.

[c] (U. S. C. C. A. 6th Circuit, 1898) Since a plaintiff cannot remove a suit to the federal court on the ground of diverse citizenship, the demand in his declaration in the state court for a sum exceeding $2,000 cannot constitute a colorable enlargement for the purpose of establishing federal jurisdiction.—Hayward v. Manufacturing Co., 29 C. C. A. 438, 85 Fed. 4.

[d] (U. S. C. C. Ind. 1893) Where in an action for wrongful death the complaint lays the damages "in the sum of —— thousand dollars; wherefore plaintiff demands judgment for —— thousand dollars," this must be construed as a suit for $1,000 damages, and defendant cannot secure a removal of the cause to a federal court on the ground of diverse citizenship, by alleging in the petition for removal that the matter in dispute exceeds $2,000.—Yarde v. Railroad Co., 57 Fed. 913.

[e] (U. S. C. C. Wash. 1896) A receiver of a national bank, appointed by the comptroller of the currency, when sued in a state court on a claim of less than $2,000, has no power to remove the case to a federal court.—Hallam v. Tillinghast, 75 Fed. 849.

[f] (U. S. C. C. Mich. 1898) To authorize a removal it must appear from the pleadings at the time of removal that the requisite sum is in controversy. Where such fact does not appear from the declaration, which is then the only pleading on file, it cannot be supplied by averments as to a set-off in the petition for removal, nor by pleadings filed after the removal is made.—Sturgeon River Boom Co. v. W. H. Sawyer Lumber Co., 89 Fed. 113.

[g] (U. S. C. C. Cal. 1899) The fact that a circuit court might have original jurisdiction of a case, under Rev. St. U. S. § 629, providing that circuit courts shall have original jurisdiction of all suits at law or in equity arising under any act providing for revenue, does not give the right to remove such a case, where involving less than $2,000, to the circuit court, since Act March 3, 1887 (24 Stat. 552), as corrected by Act Aug. 13, 1888 (25 Stat. 433), gives only the right to remove suits of which the circuit courts are given original jurisdiction "by the preceding section," which section requires at least $2,000 to be involved.—Johnson v. Wells, Fargo & Co., 91 Fed. 1.

[h] (Ga. Sup. 1896) The right to remove a cause from a state to a federal court being complete as the case stood upon the filing of the plaintiff's declaration, the defendant's right of removal cannot be taken away by any subsequent amendment by the plaintiff, reducing the amount of the debt or damages for which the action was originally brought so as to render the claim for a sum less than the requisite jurisdictional amount in the federal court.—Association v. Wells, 25 S. E. 246, 99 Ga. 228.

[i] (Ind. App. 1895) A cause is not removable to a United States court for the reason that the prayer for relief asks for "$2,000 and all other proper relief," when, under the pleadings, there was no other proper relief obtainable.—Railroad Co. v. Worman, 40 N. E. 751, 12 Ind. App. 494.

[j] (Ind. App. 1898) In determining a party's right to remove to the federal court an action between citizens of different states under a federal statute allowing such removal when the amount in controversy is over $2,000, the amount demanded in the complaint must be taken as the amount in controversy, though differing from the damages alleged, and though the prayer

Digitized by Google

was amended before answer to prevent a removal.—Railroad Co. v. Juday, 49 N. E. 843.

[k] (Ky. App. 1899) A cause cannot be removed, as a matter of right, from a state to a federal court, unless the sum sued for exceeds, exclusive of interest and costs, the sum of $2,000.—Railway Co. v. Tucker's Adm'r, 49 S. W. 314.

[l] (Tex. Sup. 1898) Where the amount in dispute in an action to cancel a lien exceeds $2,000, the defendant has a right to have the cause removed to the federal court, although the evidence may show that he is entitled to less than that sum.—Association v. Cunningham, 47 S. W. 714.

[m] (Tex. Civ. App. 1894) An allegation, in a petition for removal to a federal court, that the matter in controversy is "of the sum and value of over $2,000, as petitioner is informed and verily believes," is insufficient.—Land Co. v. Martin, 25 S. W. 475.

[n] (Tex. Civ. App. 1898) A cause cannot be removed to the federal court where the petition to cancel the obligation and recover a penalty for usury shows that the amount due on the obligation, together with the penalty, does not amount to $2,000.—Association v. Price, 46 S. W. 92.

(94 Fed. 751.)

SUPREME LODGE KNIGHTS OF PYTHIAS OF THE WORLD v. BECK.

(Circuit Court of Appeals, Ninth Circuit. May 16, 1899.)

EVIDENCE—SHIFTING BURDEN OF PROOF.

Where a defendant in an action on a policy of life insurance pleads as a defense that the insured committed suicide, by reason of which the policy became void, the burden of establishing such defense rests upon the defendant throughout the trial. The fact that the plaintiff introduces in evidence the proofs of death furnished the defendant, containing the statement that the insured committed suicide and the verdict of a coroner's jury to that effect, while such evidence is entitled to its weight, and, standing alone, would establish the fact of suicide prima facie, does not shift the burden of proof on the issue, so as to require the plaintiff on the whole case to prove, by a preponderance of evidence, that death resulted from other causes.

In Error to the Circuit Court of the United States for the District of Montana.

Albert I. Loeb, for plaintiff in error.

C. B. Nolan, for defendant in error.

Before GILBERT, ROSS, and MORROW, Circuit Judges.

ROSS, Circuit Judge. On the 1st day of April, 1895, one Frank E. Beck made application for membership in the endowment rank, Knights of Pythias, which is the insurance branch of that society's business. The application was accepted. The applicant's wife, Lillian H. Beck, the defendant in error here, was named as beneficiary. The by-laws of the society pertinent to the present case provide:

"If the death of any member of the endowment rank heretofore admitted into the first, second, third, or fourth class, or hereafter admitted, shall result from suicide, either voluntary or involuntary, whether such member shall be sane or insane at the time, or if such death shall be caused or superinduced by the use of intoxicating liquors, narcotics, or opiates, or in consequence of a duel, or at the hand of justice, or violation or attempted violation of any criminal law, then the amount to be paid upon such member's certificate shall be a sum only

Digitized by Google

in proportion to the whole amount as the matured life expectancy is to the entire expectancy at date of admission to the endowment rank; the expectation of life based upon the American Experience Table of Mortality in force at the time of such death to govern."

On the night of the 31st day of October, 1896, by the discharge of a double-barreled shotgun, which Beck at the time carried, he was killed. A coroner's inquest was held, and the verdict declared that the insured "came to his death, on the 31st of October, 1896, by shooting himself in the head with a double-barreled shotgun, with the purpose and intent of committing suicide, while temporarily insane, due probably to the use of intoxicants; that he threatened to kill his wife before killing himself." Pursuant to the by-laws of the society, proofs of death were presented to it, which were signed and sworn to by the beneficiary, in which the statement was made that the death of the insured was caused by suicide. Annexed to the proofs was a copy of the coroner's verdict, together with a certified copy of the testimony upon which it was based. In due time, after the presentation of the proofs of death, a tender of $138 was made by the society, which was refused, and thereafter the present suit was commenced against the plaintiff in error to recover the sum of $3,000, which was the amount of the insurance. While the complaint alleges that the plaintiff furnished the defendant with proof of the death of the insured, it contains no mention of the manner of his death. In defense of the action, the defendant alleges "that the death of said Beck resulted from self-destruction, and that he committed suicide; that, prior to said Beck taking his own life, said Beck was attempting to violate, and did violate, the criminal laws of the state of Montana." The answer made a tender to the plaintiff of $138, and asked that the defendant be dismissed with its costs. The case came on for trial before the court with a jury, and resulted in a verdict for the plaintiff in the sum of $3,000.

It is first claimed on behalf of the plaintiff in error that there is no evidence to sustain the verdict; in other words, that the court should have directed a verdict for the defendant. A careful examination of the evidence and consideration of the circumstances surrounding the killing satisfies us that the trial court would not have been justified in doing so, but that it was a case proper to be submitted to the jury, under appropriate instructions.

Complaint is next made of instructions given and refused, the substance of which complaint is that because, in the proofs of death presented by the beneficiary, which were introduced in evidence by the plaintiff, were the verdict of the coroner's jury and the statement of the beneficiary to the effect that the deceased committed suicide, the burden which theretofore rested on the defendant to prove that fact, which it alleged, as a defense, was thereby shifted, and that it then became incumbent upon the plaintiff to show, by a preponderance of evidence, that the death of the deceased was from accident or natural causes. Undoubtedly the preliminary proofs furnished the defendant by the plaintiff, and introduced in evidence by her, constituted prima facie proof that the deceased committed suicide, and, standing alone, would have defeated any recovery on her part. But they were of such a nature as that, since it was not made to appear that the insurer was

Digitized by Google

prejudiced in its defense by relying upon the representations contained in the proofs, it was open to the plaintiff to show by other proof, or by the facts and circumstances of the case, that those representations were made under a misapprehension of the true facts, or in ignorance of material matters subsequently ascertained. Insurance Co. v. Newton, 22 Wall. 32; Hanna v. Insurance Co., 150 N. Y. 526, 44 N. E. 1099; Walther v. Insurance Co., 65 Cal. 417, 4 Pac. 413. In all cases where such showing is satisfactory, such an admission is overcome. The burden of proof and the weight of evidence are, as said by the supreme court of Massachusetts in Bridge Co. v. Butler, 2 Gray, 132, "two very different things. The former remains on a party affirming a fact, and does not change in any aspect of the cause; the latter shifts from side to side in the progress of a trial, according to the strength and nature of the proofs offered in support or denial of the main fact to be established." In Heinemann v. Heard, 62 N. Y. 455, the court of appeals of New York said:

"During the progress of a trial, it often happens that a party gives evidence tending to establish his allegation,—sufficient, it may be, to establish it prima facie,—and it is sometimes said that the burden of proof is then shifted. All that is meant by this is that there is a necessity of evidence to answer the prima facie case, or it will prevail; but the burden of maintaining the affirmative of the issue involved in the action is upon the party alleging the fact which constitutes the issue, and this burden remains throughout the trial."

See, also, Spencer v. Association, 142 N. Y. 509, 37 N. E. 625; Scott v. Wood, 81 Cal. 398, 22 Pac. 871; Clark v. Hills, 67 Tex. 141, 2 S. W. 356; Powers v. Russell, 13 Pick. 76; Tarbox v. Steamboat Co., 50 Me. 345; Nibl. Ben. Soc. & Acc. Ins. § 336.

We are of opinion that the burden assumed by the defendant, in its answer, of proving that the deceased came to his death with suicidal intent, remained on the defendant, and that it did not devolve upon the plaintiff to prove, by a preponderance of evidence, that his death resulted from the accidental discharge of the gun.

It is further claimed on the part of the plaintiff in error that the court should have directed the jury to return a verdict for the defendant, on the ground that the death of the deceased should be treated as one "in violation or attempted violation of the criminal law." There are two answers to this point, either one of which is sufficient: First, the allegation of the answer is not that Beck's death resulted from the violation or attempted violation of any criminal law of the state of Montana, but only that at some indefinite time, "prior to said Beck taking his own life, said Beck was attempting and did violate the criminal law of the state of Montana." In the next place, while the evidence showed that, very shortly prior to the time that he was killed, he was engaged in unlawful acts, it did not show with sufficient clearness that he was so engaged at the time he met his death as to justify the court in taking the case from the jury. The judgment is affirmed.

Digitized by Google

(94 Fed. 754.)

HARVARD PUB. CO. v. SYNDICATE PUB. CO.

(Circuit Court of Appeals, Third Circuit. June 5, 1899.)

ACTION ON CONTRACT—EVIDENCE TO ESTABLISH—QUESTION FOR JURY.

Where letters introduced in evidence by a plaintiff in proof of the contract sued upon do not constitute in themselves a completed contract, but merely negotiations with a view to a contract, and they are supplemented by oral testimony, it is proper to submit to the jury the question whether the contract alleged was in fact completed.

In Error to the Circuit Court of the United States for the Eastern District of Pennsylvania.

Thomas Darlington, for plaintiff in error.

John G. Johnson, for defendant in error.

Before ACHESON and DALLAS, Circuit Judges, and BUFFINGTON, District Judge.

DALLAS, Circuit Judge. Eighteen errors have been assigned in this case, but it is not necessary to consider them in detail. The brief on behalf of the plaintiff in error presents its actual contention in four points. The first and second of these points rest upon the assertion that the court below erred in holding that certain letters which were adduced in evidence did not of themselves constitute a complete contract. If they did not, the learned judge was clearly right in submitting to the jury whether, upon the whole matter, the contract alleged and sued upon had in fact been completed. The Poconoket, 28 U. S. App. 600, 17 C. C. A. 309, 70 Fed. 640. We have carefully examined these letters, and find in them nothing but negotiations having a contract prospectively in view. From them alone it would be impossible to state any perfect agreement. They do not disclose a full and final meeting of the minds of the parties. If there was a contract, it was partly in writing and partly oral. Consequently the court below committed no error in declining to hold, as by several of the plaintiff's points it was requested to do, that a contract exclusively in writing had been established. The plaintiff, indeed, was not willing to rest its proof of contract upon the letters merely; for it introduced supplementary testimony, which, if the letters had constituted a complete contract, would have been both superfluous and irrelevant.

The complaint made of the action of the trial judge in declining to instruct the jury that, in the absence of a plea of accord and satisfaction, "the alleged transaction of January 22d, as to a settlement on that day, cannot be considered by the jury in that light," is not well founded. The testimony relating to this transaction was received without objection, and there was some cross-examination with respect to it. In our opinion, the court would not have been justified in directing the jury as the plaintiff requested. What it did say was, we think, entirely proper and appropriate, viz.:

"I may say, however, respecting this, that I have been more inclined to regard the evidence heard on this subject as bearing on the question whether the

Digitized by Google

plaintiff at that time believed it had such a claim as it now sets up,—in other words, whether the claim is an afterthought,—than as evidence of a settlement of the claim made here. The parties were at that time settling an old account, and they introduced into it the cost of putting in the electric light and preparing the office for this business. They made no such claim then as is now set up, so far as my memory of the testimony goes,—though I leave it to you,—nor until this suit was brought. You have heard the testimony of the witnesses respecting what was said upon that occasion. The defendant sets it up as evidence that this matter was called up, and that any claim the plaintiff had against the defendant on account of what had taken place was settled. I repeat to you that I have regarded it, not so much as evidence of such a settlement, as evidence bearing upon the question whether the plaintiff then at that time believed it had such a claim,—believed that the contract now set up existed,—or whether this claim was an afterthought. You have heard the defendant's testimony in answer to the plaintiff's on this subject, and must determine, from a fair consideration of it, and of all that is before you, what weight should be attached to it."

The fourth point submitted by the plaintiff in error, that "the verdict was against the evidence," presents no question which is properly for consideration by this court. The judgment is affirmed.

(94 Fed. 755.)

TOWN OF GREENBURG v. INTERNATIONAL TRUST CO.

(Circuit Court of Appeals, Second Circuit. May 25, 1899.)

No. 82.

1. HIGHWAYS—DETERMINATION OF NECESSITY BY COURTS—VALIDITY OF NEW YORK STATUTE.
   Laws N. Y. 1892, c. 493, providing for the extending of highways in one town into or through other towns in the same county, was not in violation of the state constitution because it conferred on certain courts of the state the power to determine the necessity or expediency of such extensions, the highest court of the state having upheld the exercise of such powers by the courts in numerous analogous cases arising under the same constitution.
2. MUNICIPAL BONDS—IRREGULARITY IN ISSUANCE—BONA FIDE HOLDERS.
   The fact that the municipal authorities gave a credit to the purchaser of the bonds of a town, instead of selling them for cash, as required by the statute, is not a defense to an action on such bonds by a subsequent bona fide purchaser.

In Error to the Circuit Court of the United States for the Southern District of New York.

J. Rider Cady, for plaintiff in error.
John Dillon, for defendant in error.

Before WALLACE and SHIPMAN, Circuit Judges.

WALLACE, Circuit Judge. The bonds in suit were created pursuant to the authority conferred by an act of the legislature of the state of New York entitled "An act to provide for the construction of highways and bridges upon highways running through two or more towns of the same county" (chapter 493, Laws 1892), and their validity is contested upon the proposition that the act violates the constitution of the state. The contention, if well founded, is of course

Digitized by Google

fatal to the validity of the bonds, and no holder of them can invoke protection as a bona fide purchaser, as all purchasers take them with knowledge of the law, and presumed knowledge that they are void.

Section 1 of the act provides as follows:

"Any twelve or more freeholders, residing in any county of this state, may present a petition which must be duly verified by at least all of the said freeholders, to the supreme court at a special term to be held in the judicial district where such court is situated or to the county court of said county, stating that it is necessary for the public welfare and convenience that a highway in any one town in said county shall be continued along and through another town in the same county. Upon receipt of the said petition the said court shall carefully consider the facts therein alleged, and if it shall be satisfied that the said highway is necessary for the public welfare and convenience, and that its continuation and construction will afford a nearer road between two populous points in two towns than by any existing highway, then the said court may make an order directing that a notice shall be published in two newspapers of said county, for two successive weeks, of the time and place when an application for the commissioners shall be made, and at said time and place said court shall make an order appointing three commissioners for the purposes hereinafter described, all of which commissioners shall be freeholders residing within the said county."

By other sections of the act, the commissioners are directed to proceed with due diligence to continue, lay out, open, and construct the highway by as direct a route as they shall deem practicable between the terminal points named in the petition, and build any necessary bridges, are empowered to enter upon necessary lands and remove the fences, and are directed, upon a prescribed notice, to ascertain and determine the damages sustained by any person interested in the lands through which the highway may have been laid out. The act also provides for an appeal from the award of the commissioners by any person aggrieved to the court by which the commissioners were appointed; authorizes the court to confirm, or order the commissioners to alter or amend, the award; provides that the amount ascertained by the commissioners for the expenses and damages of laying out and constructing the road shall be paid by the town through which it is constructed; directs the supervisor of each of the towns to issue the bonds or obligations of the town for the amount, payable in 20 years from date, and deliver them to the commissioners; and directs the commissioners to pay out the bonds at not less than par, in liquidation of the expenses and damages, or, at their option, to sell them at not less than par, and apply the proceeds for that purpose.

The constitution in force in 1892 (Const. 1846, and amendments) contained no provision in terms prohibiting the legislature from conferring upon the court the powers now in question. As to "officers whose offices may hereafter be created by law," it authorized their selection by appointment "as the legislature may direct" (article 10, § 2), and thereby enabled that body to lodge the appointment with any agency it might see fit to designate. Sturgis v. Spofford, 45 N. Y. 446. It authorized the legislature to ascertain the compensation to be made when private property was to be taken for public use "by not less than three commissioners to be appointed by a court of record as shall be prescribed by law" (article 1, § 7); and un-

Digitized by Google

der this provision it was adjudged by the court of appeals to be no objection to the constitutionality of an act that it devolved upon the commissioners, thus to be appointed by the court, administrative duties in the management of the public undertaking. In re Village of Middletown, 82 N. Y. 196. Under the general powers confided by the constitution, it has been declared by the highest court of the state that the legislature could delegate to public officers the determination of the expediency of laying out highways and appropriating the property of individuals for the purpose; could direct the construction of highways by towns; could compel the creation of a town debt therefor by the issue of bonds; could impose a tax upon the property of the towns to pay the bonds; could do these things without the consent of the citizens or the town authorities; and that, when the legislative act has committed to public officers the duty of judging of the expediency of making an appropriation of property for a public use, it is no objection to its validity that it permits them to act upon their own views of propriety and duty without the aid of a forensic contest, or affording a hearing upon the question to parties interested. People v. Smith, 21 N. Y. 595; People v. Flagg, 46 N. Y. 401.

That the legislature can delegate to the courts the power of determining the question of the extent and necessity of an appropriation of property for public use is shown by the decisions under the general railroad act of 1850. In Railroad Co. v. Davis, 43 N. Y. 137, the court used this language:

"It is, we think, the clear construction of the statute that the court is to determine, upon the application by a railroad company to acquire additional lands for the purposes of the corporation, the question as to the necessity and extent of the appropriation. The plenary power of the legislature covering the subject would have authorized it to designate the particular premises which the respondent might take for its purpose. The general purpose being public, the legislature could have defined the extent of the appropriation necessary for the public use. But this the legislature has not attempted to do, nor has it delegated to the railroad company the power to determine the necessity for the appropriation of private property for corporate purposes. It has constituted the court a tribunal to hear and determine on the premises."

In Re New York Cent. R. Co., 66 N. Y. 407, the court said:

"This necessity is therefore made a judicial question, and when controverted it is obvious that the facts must, in some form, be laid before the court to enable it to decide."

We do not understand that the constitutionality of the present act is impugned upon any other contention than that it undertakes to devolve upon the court legislative or administrative, instead of judicial, functions. The separation of legislative, executive, and judicial powers is recognized throughout the constitution, as it is in the constitutions of all the other states; and, if the question of the necessity of opening public highways is not a judicial question, the legislature could not commit it to the courts, and the act is clearly void. This is the real inquiry, and, as it appears to us, the only one that requires discussion upon this branch of the cause.

If the legislature can devolve upon a court the decision of the necessity of an appropriation of property for the uses of a railway, it is difficult to understand why this may not be done when the public

Digitized by Google

use is for the purpose of a common highway. No adjudication by the courts of this state, or by any other court, directly in point, is cited for the proposition that the legislature may not confer upon a judicial tribunal the power to determine as to the necessity of the construction of a highway. Inasmuch as such a question can be referred to a municipality, or to public officers, for determination, the objection to depositing the power with a judicial tribunal can only be found in the consideration that the question is not of a nature to involve the exercise of the judicial function. The objection is met by many decisions of the courts of this state in cases arising under statutes authorizing courts to review the action of commissioners in laying out, or refusing to lay out, highways. In Lawton v. Commissioners, 2 Caines, 179, the supreme court, in considering a statute which authorized the commissioners of highways to lay out a road, and, if they refused to lay it out, gave an appeal to the judges of the court of common pleas, assumed as unquestionable the authority of the judges to decide the appeal upon the merits,—"the fitness or unfitness of laying out the road." In People v. Champion, 16 Johns. 61, the case arose under a later statute authorizing an appeal to three of the judges of the court of common pleas by any person aggrieved by the determination of the commissioners of highways in laying out, or refusing to lay out, any road, and the court declared that the power of the judges in appeals from a refusal authorized them "to lay it out themselves." Commissioners of Highways of Warwick v. Judges of Orange Co., 13 Wend. 433, was a case arising under a later statute containing substantially similar provisions, and the court said:

"The proceeding by appeal was not intended to be a review of legal questions, or of irregularities that might exist in the preliminary steps, or of a right of certiorari, but to be an examination of the necessity or propriety of the road, assuming all of the previous steps to have been regularly taken."

In People v. Judges of Dutchess Co., 23 Wend. 360, the court said:

"The commissioners had decided, in effect, that no road on any route between these points should be laid out. Upon that decision the judges were sitting in review, and it was a matter of no moment what particular route either the jury or the commissioners had examined."

In People v. Commissioners of Highways of Cherry Valley, 8 N. Y. 476, the syllabus is:

"Upon an appeal from the determination of the commissioners of highways refusing to lay out a highway, the referees have all the powers, and are charged with all the duties, formerly possessed by the three judges of the court of common pleas under the provisions of the Revised Statutes. To reverse the determination of the commissioners, they should make such an order in relation to laying out the highway as in their judgment the commissioners should have made."

In People v. Commissioners of Highways of Town of Milton, 37 N. Y. 360, the case was one where the commissioners had refused to open a highway, and, upon an appeal from their order, the referees had ordered it to be laid out and opened. The court affirmed the lower courts in ordering a peremptory mandamus compelling the commissioners to open the road. All of these cases necessarily sanction the proposition that the question of the propriety and necessity

Digitized by Google

of opening, or refusing to open, a highway can be properly committed to the decision of a judicial tribunal.

We entertain no doubt that the present act was a constitutional exercise of power by the legislature, and, having reached this conclusion, do not feel it to be our duty to consider whether it was expedient or inexpedient legislation. It is proper to say, however, in answer to the suggestion that the act as framed precluded the officers or citizens from any voice in a matter entailing a large debt upon the town, that we do not so read the act. The commissioners were to be appointed after two weeks' public notice; and at any time before the appointment was made it was within the power of the court to reconsider its decision, and refuse to appoint commissioners, and it is to be presumed that the court would have given due weight to any remonstrances or representations had any been presented.

The bonds in suit were issued and negotiated conformably in all respects to the provisions of the act but one. They were negotiated at par, but not for cash, and under an agreement with the purchaser that, as to a portion of the price, payment might be deferred and collateral securities substituted meanwhile. Assuming this to have been a departure from the statutory requirement, as the plaintiff was a bona fide holder of the bonds, without notice of the deviation by the agents of the town from the terms of their authority, the facts did not afford any defense to his action. Mercer Co. v. Hacket, 1 Wall. 83; Grand Chute v. Winegar, 15 Wall. 355; Provident Life & Trust Co. of Philadelphia v. Mercer Co., 170 U. S. 593, 18 Sup. Ct. 788. The court below properly directed a verdict for the plaintiff, and the judgment is affirmed, with costs.

(94 Fed. 762.)

TIMES PUB. CO. v. CARLISLE. JOURNAL CO. v. SAME. WORLD PUB. CO. v. SAME.

(Circuit Court of Appeals, Eighth Circuit. May 8, 1899.)

Nos. 1,137–1,139.

1. LIBEL—ACTIONS—DAMAGES.
   A good name is more estimable than tangible property, and as valuable, and the law gives corresponding redress for its injury.
2. SAME—EVIDENCE—PRESUMPTION FROM GOOD REPUTATION OF PLAINTIFF.
   Every man is presumed to be innocent of crime until he is proved to be guilty; but there is a stronger presumption that a man of good reputation is not guilty of a criminal charge, and he who attacks the reputation of such a man cannot escape the effect of this presumption.
3. SAME—NECESSITY OF PROVING ACTUAL MALICE.
   The unprivileged publication of matter that is false and libelous per se warrants the recovery of compensatory damages, without allegation or proof of malice in its ordinary acceptation; that is to say, ill will, bad motive, hatred, or intent to injure.
4. SAME—IMPLIED MALICE.
   Malice, in its legal sense,—that is to say, "an act done wrongfully, without legal justification or excuse,"—is conclusively implied from such a publication.

Digitized by Google

5. SAME—UNPRIVILEGED PUBLICATION—JUSTIFICATION.
The fact that the information from which such a publication was made was derived from another, who made or repeated the charge it contained, and that the name of the informant was stated in the libel, is no justification for its publication.

6. SAME—EXEMPLARY DAMAGES.
Exemplary damages may be allowed by the jury, in an action of libel, when the publication was made with ill will, or a willful intent to injure the party libeled, and the matter published was false, libelous, and unprivileged.

7. SAME.
A violation of the rights and feelings of the victim of a libel, which is caused by a reckless disregard of them, is the legal equivalent of an intentional violation of them.

8. SAME.
Exemplary damages may be allowed by a jury, in an action of libel, when the publication has been made with a reckless disregard of the rights of the person libeled, although it was not inspired by ill will, spite, or intent to injure him.

9. SAME—QUESTIONS FOR JURY.
In an action of libel, it is ordinarily a question for the jury, in view of all the facts and circumstances of the case, whether or not exemplary damages should be allowed; and the amount of such damages is exclusively within their province.

10. FEDERAL COURTS—FOLLOWING STATE PRACTICE.
The federal courts in Missouri are not required to follow the statute of that state (Laws 1895, p. 168), which requires juries, in cases in which exemplary damages are allowed, to assess such damages separately.[1]

11. LIBEL—LIABILITY OF CORPORATION.
A corporation is liable for exemplary damages for acts done in the course of its business, by its agents, while acting within the scope of their authority and duty, to the same extent as an individual; and a corporation publishing a newspaper may be liable for such damages for circulating a libel therein.

12. SAME—PLEADING—MATTER IN MITIGATION.
Under the Code matter in mitigation of damages for the publication of a libel must be pleaded before it can be proved.

In Error to the Circuit Court of the United States for the Western District of Missouri.

These were three actions for libel. The defendant in error, Harold Carlisle, was a merchant, living with his wife, in Kansas City, in the state of Missouri, where he had resided for more than two years, on February 20, 1897. He was 44 years old, and had a good reputation for honesty and integrity. He was engaged with one Peters, under the firm name of Carlisle & Peters, in trade in gents' furnishing goods, at 818 Main street, in Kansas City. He was born in England, and came to this country in 1879. He had been engaged for many years in the business of raising, buying, and selling cattle in New Mexico and Kansas. From 1884 until 1893 he was the manager of a cattle company, which had been incorporated in England, and which had a ranch, and sometimes as many as 20,000 head of cattle, in the southwestern corner of Utah and in the northwestern corner of New Mexico. In 1893 that company closed out its stock, and Carlisle and one Gordon, who then became his partner in this business, occupied the ranch, and conducted the business of buying young cattle, shipping them east, and selling them. Gordon occupied the ranch, and bought, cared for, and drove the cattle, while Carlisle lived in Kansas City, met the herds at Dallas, in the state of Colorado, shipped, and sold them. In June, 1896, Gordon drove about 700 of the cattle of this firm into Dallas, Colo., where Carlisle met

[1] For conformity of practice in federal to that of state courts, see note to O'Connell v. Reed, 5 C. C. A. 594, note to Griffin v. Wheel Co., 9 C. C. A. 548, and note to Insurance Co. v. Hall, 27 C. C. A. 392.

Digitized by Google

him, and shipped them. At this time one Mostyn appeared at Dallas, and claimed that a part of a bunch of 50 cattle, which Gordon had bought from one White, had been stolen by White, and thereupon White was arrested. He was subsequently tried and convicted for the theft. When this claim was made, Gordon produced his bill of sale from White, and Carlisle remarked that, if there was anything in the bunch that had been stolen, he did not want it, and thereupon separated the cattle purchased from White from the other cattle owned by the firm, and turned them over to Mostyn and a proper inspector for the benefit of their owners. On February 20, 1897, John D. Reeder, the sheriff of Mesa county, Colo., appeared in Kansas City with an affidavit of one Chipman, an information signed by the district attorney of Mesa county, a warrant of arrest, an affidavit of the assistant district attorney of Mesa county for a requisition, a proper requisition on the governor of Missouri for Carlisle; and an order for his arrest and delivery to Reeder on the false charge, which was set forth in these requisition papers, of having in his possession, on June 4, 1896, eight head of cattle which he knew had been stolen by Ed. Young and E. Frank White, and which he intended to appropriate to his own use. On these papers Carlisle was arrested. He declared to all who asked him that he was innocent of the charge, accompanied the sheriff to Colorado, and the district attorney of Mesa county entered a nolle prosequi on the charge against him.

On the evening of the day of his arrest the plaintiff in error the World Publishing Company printed and circulated in the Kansas City World an article which gave an account of the arrest of Carlisle, and of the charge upon which he was arrested, and which contained, among other things, these words in addition: "Sheriff Reeder arrived here from Colorado Saturday morning. He said that for months he had been searching for evidence against Carlisle, who was formerly in the cattle business at Salt Lake City and who is alleged to have been operating with a gang of cattle thieves for money. * * * For a long time cattle thieves have been driving cattle off the lonely ranges in Northern Colorado. The authorities discovered that White drove cattle off the Utah Cattle Company's range in Mesa county and shipped eight head to Dallas, Colo., where they [———] received by Carlisle. Carlisle, in turn, shipped the cattle to Denver, where they were recovered by Sheriff Reeder before a sale was effected. This was last June. Before this the Mesa county sheriff had recovered two shipments of stolen cattle,—one of 20, and one of 40, head." On March 12, 1897, Carlisle sued the World Company for publishing the statements which we have quoted, and prayed for judgment for $20,000 actual damages and $5,000 punitive damages. In its answer to the petition of Carlisle the World Company set out the entire article which contained these quotations, the existence of the requisition papers, and the proceedings which they evidenced, and pleaded that White and Young stole 40 cattle, and delivered them to Gordon, who held them until they were identified as stolen cattle, and taken from the drove of Carlisle and Gordon by the sheriff, and that White and Young had been arrested, and White had been convicted of stealing the cattle. It also pleaded that Reeder, the sheriff, whom it believed, and from whose official position and appearance it was justified in believing, to be reliable and trustworthy, stated, in the presence of its reporter and others, substantially all that the article contained about the defendant in error before it made the publication, and that it published the statements in it without any malicious intent, and without any desire or intent to injure Carlisle.

On the morning of February 21, 1897, the plaintiff in error the Journal Company published in the Kansas City Journal an account of Carlisle's arrest, and of the charge upon which his arrest was made, and, among other things, these words in addition: "Sheriff Reeder arrived in Kansas City yesterday. He claims he has been searching for evidence against Carlisle for six months, and that Carlisle has been associated with a gang of cattle thieves, which has operated to some extent in Utah, stealing about 60 head of cattle. * * * For some time past cattle have been driven off the Utah Company's range in Mesa county, Colo. Sheriff Reeder learned that Frank White had driven 18 head of cattle off the range, and shipped them to Dallas, Colo., where it is claimed Carlisle received them, and shipped them to Denver. Sheriff Reeder recovered the cattle before a sale had been effected, however. Sheriff Reeder claims to have recovered two shipments of stolen cattle before this,—one of 40 head, and

Digitized by Google

one of 60 head. He claims Carlisle made both shipments." The defendant in error thereupon sued the Journal Company for publishing the statements we have quoted, and that company answered in the same way that the World Company did.

On the same morning, the plaintiff in error the Times Publishing Company printed and circulated in the Kansas City Times an account of the arrest of Carlisle, and of the charge upon which it was made, and, among other things, these words in addition: "The police of this city and John D. Reeder, sheriff of Mason county, Colo., allege that he has been at the head of an organized gang of cattle thieves, that have run off a great deal of stock from Colorado cattle ranges. * * * It is claimed by Sheriff Reeder that Carlisle, who, together with a man by the name of Gordon, is interested in a cattle ranch at Dallas, Colo.; purchased 60 head of cattle 18 months ago, and 8 head of cattle last June, which were stolen from the Utah Cattle Company." Thereupon Carlisle brought an action against the Times Company for publishing the statements quoted, and that company answered in the same way that the Journal Company did.

On the motion of the plaintiffs in error, the three cases thus commenced were consolidated and tried together. Carlisle did not claim any damages in his petitions, or on the trial of these cases, for the publication of the fact that he was charged in the requisition papers with, and was arrested for, having eight head of stolen cattle in his possession, which he knew were stolen. His claim was for the publication of the charges contained in the statements we have quoted, and his allegation was that their publication was false and libelous. The gravamen of these charges, stated in different language, was that Carlisle had operated with, or been associated with, or was the head of, a gang of cattle thieves. There was no evidence at the trial that these charges were true. There was evidence that Reeder made the charges when he visited Kansas City for the purpose of making the arrest, and that he made them in the hearing of the reporters of the plaintiffs in error before their articles were published. The requisition papers were received in evidence, and the fact was proved that they were seen and examined by these reporters before the publications were made. The jury returned a verdict of $2,500 against the World Company, of $2,685 against the Journal Company, and of $4,580 against the Times Company; and it is the judgments upon these verdicts which the writs of error have been sued out to reverse.

Frank Hagerman, D. B. Holmes, and Frank P. Sebree (Henry C. McDougal and L. C. Krauthoff, on the brief), for plaintiffs in error.

I. N. Watson and Shannon C. Douglas, for defendant in error.

Before CALDWELL, SANBORN, and THAYER, Circuit Judges.

SANBORN, Circuit Judge, after stating the facts as above, delivered the opinion of the court.

"A good name is rather to be chosen than great riches, and loving favor rather than silver and gold." The respect and esteem of his fellows are among the highest rewards of a well-spent life vouchsafed to man in this existence. The hope of them is the inspiration of his youth, and their possession the solace of his later years. A man of affairs, a business man, who has been seen and known of his fellowmen in the active pursuits of life for many years, and who has developed a good character and an unblemished reputation, has secured a possession more useful and more valuable than lands, or houses, or silver, or gold. Taxation may confiscate his lands; fire may burn his houses; thieves may steal his money; but his good name, his fair reputation, ought to go with him to the end,—a ready shield against the attacks of his enemies, and a powerful aid in the competition and strife of daily life. Every man is presumed to be innocent of wrong until he is proved to be guilty; but, when a heinous

Digitized by Google

crime is charged upon a man whose character and reputation for honor and integrity have been unquestioned for years in the community in which he has lived, that character and that reputation stand sponsors for his innocence, and raise a still stronger presumption, which accompanies him in public and in private, in court and in council, and in every situation in life, and which is acted upon and recognized daily by all men,—a presumption that such a man would not be guilty of such a crime. U. S. v. Shapleigh, 12 U. S. App. 26, 42, 4 C. C. A. 237, 246, and 54 Fed. 126, 135. The law recognizes the value of such a reputation, and constantly strives to give redress for its injury. It imposes upon him who attacks it by slanderous words, or by a libelous publication, a liability to make full compensation for the damage to the reputation, for the shame and obloquy, and for the injury to the feelings of its owner, which are caused by the publication of the slander or libel. It goes further. If the words are spoken, or the publication is made, with the intent to injure the victim, or with a criminal indifference to civil obligations, it imposes such damages as a jury, in view of all the circumstances of the particular case, adjudge that the wrongdoer ought to pay, as an example to the public, to deter others from committing like offenses, and as a punishment for the infliction of the injury.

These general propositions are unquestioned. But the books are full of learning and confusion as to how far malice in the libeler is an essential prerequisite to the enforcement of these liabilities. Much of the discussion arises from, and a large part of the confusion is caused by, the different meanings which this word has grown to have. In the ordinary acceptation of the term, it signifies ill will, evil intent, or hatred; while its legal signification is defined to be "a wrongful act, done intentionally, without legal justification or excuse." Darry v. People, 10 N. Y. 120, 139; Buckley v. Knapp, 48 Mo. 152, 161; Clements v. Maloney, 55 Mo. 352, 359. When we come to read the text-books and the opinions of the courts on this subject, we find the writers and the judges using the word alternately with one and the other meaning, so that close attention to the sense in which it is used in each instance is requisite to a clear understanding of the statements of the writers and of the decisions of the courts. In many decisions it is laid down as a settled rule that malice is essential to a recovery in an action of libel, but that it is conclusively implied from the unprivileged publication of a false charge which is libelous in itself. Buckley v. Knapp, 48 Mo. 161; Callahan v. Ingram, 122 Mo. 355, 370, 26 S. W. 1020. This, indeed, is a settled rule of law, and it is obviously a correct statement where "malice" means, as it does in this declaration, that kind of malice which is always inferred from "a wrongful act, done intentionally, without justification or excuse"; for it is a truism to say that malice is the conclusive inference from such an act, and that, since the publication of a false charge that is libelous per se is without justification or excuse, malice is implied therefrom. This declaration of the law has exactly the same practical effect as the more simple and more philosophic rule that malice, in the common acceptation of the term,—that is to say, ill will, evil intent, bad

Digitized by Google

motive,—is not required to be either pleaded or proved to entitle the injured party to recover the actual damages he has sustained from the unprivileged publication of a false and libelous charge. The person libeled is as clearly entitled to full compensation for the loss he has sustained from a wrong inflicted with a laudable motive, or through mistake or inadvertence, as from one perpetrated from a bad motive, or with a diabolical intent. Ullrich v. Press Co. (Sup.) 50 N. Y. Supp. 790, 798; Hamilton v. Eno, 81 N. Y. 126; King v. Root, 4 Wend. 127. It is a corollary to these rules that it is no justification for the publication of such a libel that another had spoken or written the false charge, and that the libeler simply repeated his statement, and that he gave the name of his informant. It is no defense to an action of trespass that another trespassed, and informed the defendant how to do it without expense or trouble; and it is no excuse or justification for an injury to a fair reputation that another has commenced to besmirch it, and has furnished the pigments to carry on the nefarious undertaking. Sans v. Joerris, 14 Wis. 666; Newman v. Foster, 8 Wend. 602; Odgers, Libel & Sland. p. 124.

But may exemplary or punitive damages be recovered for a libelous publication, without proof of ill will, hatred, or an intent on the part of the libeler to injure his victim? Punitive damages are given as an example to the public, to deter others from committing a like offense, and as a punishment to the wrongdoer. They are never allowable where the defendant, after due investigation, in good faith, with reasonable cause to believe the charge to be true, has published it from a proper motive, in the honest belief that it is true. Are there, however, no circumstances under which the jury may award exemplary damages, in the absence of proof of actual evil intent or bad motive on the part of the defendant? May the libeler shut his eyes, and blindly publish heinous charges against men and women of spotless character and unsullied reputation, and still escape liability for everything except the actual damages which they can prove, because he had no intention to injure them, no care about them, but simply sought to make money from the sale of the racy story? If he may not, where is the dividing line, and who shall determine in each case, the court or the jury, whether or not exemplary damages shall be allowed? It is not every degree of negligence, it is not a mere mistake or inadvertence occurring in the course of a reasonable investigation, that will lay the foundation for exemplary damages for the publication of a libel; and yet every man is bound to use his own property and pursue his own avocation in such a way that he may not unlawfully injure the property or violate the rights of his neighbors. Not only this, but when his property or his avocation borders upon or impinges upon the property or rights of his fellow men, he is bound to exercise ordinary care to ascertain the extent of that property and of those rights, and to abstain from unnecessarily injuring them.

In Durant Min. Co. v. Percy Consol. Min. Co., 93 Fed. 166,[2] an action of willful trespass, this court held that the plaintiff might

[2] 35 C. C. A. 252.

Digitized by Google

recover more than his actual loss if the trespass was willful and intentional, and that the jury might "lawfully infer that a trespasser had knowledge of the right and title of the owner of the property upon which he entered, and that he intended to violate that right, and to appropriate the property to his own use, from his reckless disregard of the owner's right and title, or from his failure to exercise ordinary care to discover and protect them." It is difficult to perceive why a jury might not likewise infer an intent to violate the rights of a plaintiff, in a libel suit, from a stolid indifference to, or reckless disregard of, them.

In Day v. Woodworth, 13 How. 363, 371, the supreme court declared that exemplary damages might be allowed by the jury in "actions of trespass, where the injury had been wanton or malicious, or gross and outrageous."

In Railroad Co. v. Quigley, 21 How. 202, 214, an action of libel, that court held that:

"Whenever the injury complained of has been inflicted maliciously or wantonly, and with circumstances of contumely or indignity, the jury are not limited to the ascertainment of a simple compensation for the wrong committed against the aggrieved person. But the malice spoken of in this rule is not merely the doing of an unlawful or injurious act. The word implies that the act complained of was conceived in the spirit of mischief, or of criminal indifference to civil obligations."

In Railway Co. v. Arms, 91 U. S. 489, 493, an action of negligence, Mr. Justice Davis, in delivering the opinion of the court, said:

"Redress commensurate to such injuries should be afforded. In ascertaining its extent, the jury may consider all the facts which relate to the wrongful act of the defendant, and its consequences to the plaintiff; but they are not at liberty to go further, unless it was done willfully, or was the result of that reckless indifference to the rights of others which is equivalent to an intentional violation of them. In that case, the jury are authorized, for the sake of public example, to give such additional damages as the circumstances require. The tort is aggravated by the evil motive, and on this rests the rule of exemplary damages."

In Bennett v. Salisbury, 45 U. S. App. 636, 639, 24 C. C. A. 329, 331, and 78 Fed. 769, 771, the circuit court of appeals of the Second circuit held that exemplary damages might be recovered in an action of libel, although the defendant had no ill will or intent to injure the plaintiff, if he was guilty of "such wanton disregard of, or such reckless indifference to, the rights of others as was equivalent to the intentional violation of such rights."

Through all these and many other authorities the thought runs that a reckless disregard of the rights and feelings of others may be equivalent to an intentional violation of them, and that, where such recklessness exists, punitive damages may be allowed, in the discretion of the jury. A moment's consideration will show, however, that wherever the violation of the rights of one who is slandered or libeled results from a reckless disregard of those rights by the libeler, that disregard is the equivalent of an intentional violation of them. Every man is presumed to intend the natural and probable effects of his acts and omissions. The natural and probable effect of the reckless disregard by the publisher of a newspaper of the rights of his fellow men to their good names and fair reputations is the violation of those

Digitized by Google

rights, and hence the reckless disregard of them becomes equivalent to an intentional violation of them. Moreover, every reason for the allowance of exemplary damages applies with as much cogency and force to a libel published with a reckless disregard of the rights of the libeled as to one published with an evil intent or a bad motive. Such damages are allowed as an example to the public, and as a punishment to the wrongdoer. The main purpose of their allowance is to protect the characters and reputations of those who have not been attacked, and to warn all men not to destroy or injure the names that are still good and the reputations that are yet fair. The interests of these citizens and of the public demand the protection of their reputations against assaults that would destroy them with a reckless disregard of the rights of their owners as forcibly as they do that they shall be protected against those inspired by hatred or ill will. The effect of libels published with recklessness is as deleterious as that of libels published with ill will. In truth, the demand for the protection against libelous publications made with stolid indifference to, and reckless disregard of, the rights of those injured, is far more urgent than the demand for protection against those published with hatred, because the former are usually inspired by avarice, and are as much more numerous and as much more dangerous to individuals and the public as avarice is more prevalent than spite.

Turn it as you will, the reason of the rule and the great weight of authority upon the subject lead alike to this conclusion: Exemplary damages may be allowed by the jury, in actions of libel, when, upon a consideration of all the facts and circumstances of the case, they find that the publication has been made with a reckless disregard of the rights and feelings of the person libeled, as well as where they find that it has been inspired by hatred or ill will towards, or an intent to injure, him. Bennett v. Salisbury, 45 U. S. App. 636, 639, 24 C. C. A. 329, 331, and 78 Fed. 769, 771; Ullrich v. Press Co. (Sup.) 50 N. Y. Supp. 788, 792; Samuels v. Association, 75 N. Y. 604; Bergmann v. Jones, 94 N. Y. 51, 62; Holmes v. Jones, 121 N. Y. 461, 467, 24 N. E. 701; Warner v. Publishing Co., 132 N. Y. 181, 184, 31 N. E. 393; Holmes v. Jones, 147 N. Y. 59, 61, 41 N. E. 409; Smith v. Mathews, 152 N. Y. 152, 158, 46 N. E. 164; Young v. Fox (Sup.) 49 N. Y. Supp. 634; Shanks v. Stumpf (Sup.) 51 N. Y. Supp. 154; Callahan v. Ingram, 122 Mo. 355, 371, 372, 26 S. W. 1020; Buckley v. Knapp, 48 Mo. 161; Clements v. Maloney, 55 Mo. 352, 359.

It is ordinarily a question for the jury to determine, in view of the particular circumstances of each case, whether or not punitive damages should be allowed, and the amount of the allowance is exclusively within their province. Day v. Woodworth, 13 How. 370; Scott v. Donald, 165 U. S. 58, 89, 17 Sup. Ct. 265; Holmes v. Jones, 147 N. Y. 59, 67, 41 N. E. 409. The constitution of the state of Missouri, where these actions were tried (article 2, § 14), provides that:

"In all suits and prosecutions for libel the truth thereof may be given in evidence, and the jury, under the direction of the court, shall determine the law and the fact."

Digitized by Google

The questions which have now been discussed were presented in various forms in the trial of the cases before us, and have been properly saved for our consideration. It seemed conducive to a convenient and expeditious disposition of the cases to consider them before stating the details of the exceptions which raise them. We turn to a consideration of these exceptions. The main point of attack is the charge of the court. The plaintiffs in error did not plead or prove the truth of the charges for the publication of which these suits were brought, but they produced evidence to the effect that Sheriff Reeder originated the charges, and stated them to their reporters before their publication, and they prayed in their answers, and in four requests which they presented at the close of the trial, that they might prevail on account of this pleading and proof. The court carefully read to the jury the three libels, stated clearly the contents of the answers of the plaintiffs in error, and then addressed itself in their order to the questions of justification, mitigation of damages, compensatory damages, exemplary damages, and some special phases of the cases against the Times Company and the World Company. The trial judge properly charged the jury that the fact that the libelous matters published were told to the publishers by another was no justification for their publication, and that proposition of law is not challenged in this court, although, as we have said, the judge was asked to hold the counter proposition at the trial, and exceptions were taken because he refused. The complaint now is that there was error in the charge of the court on the question of damages, and we have called attention to the fact that this question of justification was presented and urged upon the court below because many of the statements of the judge that are now challenged as tending to induce error in the assessment of damages were not addressed to that subject at all, but to the question of justification alone. For example, he said:

"The repetition of slander uttered by publication in the newspaper makes the publisher of that scandal or libel as much responsible in law for the act of publication as if the newspaper were the originator of the slander; the information they received, as you will be advised by the court later on, going to the question only of damages."

This was a correct statement of the law. The court did not say that the publisher would be liable for as much damages as the originator, but that he would be as much liable, and he was speaking, not of the amount of damages, but upon the question of a justification of the publication.

It is assigned as error that the court instructed the jury that, if the defendant in error recovered, he would be entitled to compensatory damages, and then said that by "compensatory damages is meant simply such sum of money, such round sum in measurement, as in the judgment of the jury will compensate him for injury done to his feelings and his character and reputation." He then told them that the action was not founded on special damages resulting from loss of business or trade, but on general damages for defamation of character, injustice, and indignity. This

Digitized by Google

assignment is leveled at the adjective "round," and it is contended that its meaning is large, and that its use deprived the jury of the privilege of returning nominal damages. To our mind it has no such significance, and we are unable to persuade ourselves that it had any such meaning to the jury. In our opinion, it was used, and rightly used, to describe a lump sum, in contradistinction from one that is the result of calculation or of exact computation.

The statutes of the state of Missouri require that, in all actions where punitive damages are recoverable, the jury shall separately state the amount thereof in their verdict (Laws Mo. 1895, p. 168), and it is insisted that the court erred because it told the jury to assess such damages in these cases as they deemed just and right, and did not require them to separate the exemplary damages from the actual damages. We have searched this record in vain for any request on the part of the plaintiffs in error for such a separate assessment, nor do we find that this statute or this objection was in any way called to the attention of the court when the charge was delivered and the exception taken. The function of this court is to review the supposed errors of the court below. There is no error here for us to review, because this question was not presented to, or decided by, that court. Moreover, if it had been, there was no error in the instruction given or the practice adopted by the trial court. The federal courts are not required to follow subordinate provisions of state statutes which would incumber the administration of the law or tend to defeat the ends of justice in their tribunals. O'Connell v. Reid, 12 U. S. App. 369, 378, 5 C. C. A. 586, 592, and 56 Fed. 531, 537.

The next subject for our consideration is the charge of the court upon exemplary damages. While treating the subjects of justification and compensatory damages, the court defined "malice," in its legal sense, to be "a wrongful act, done intentionally, without legal justification or excuse," and used it in that sense throughout its instructions. It told the jury that no justification of the publication of the libels had been pleaded or proved, that malice was implied from their publication, and that the defendant in error was entitled to recover compensatory damages. This was a correct statement of the law, under all the authorities. White v. Nichols, 3 How. 266. When the court came to the subject of exemplary damages, it said to the jury:

"As I have already stated to you, gentlemen of the jury, the publication of libelous matter in a newspaper, that is false, and without justification or legal excuse, itself expresses malice, and entitles the parties to recover thereon. These publications can be made under circumstances which entitle the party to something more than what is called 'compensatory damages.'"

It then proceeded to give the portion of the charge on compensatory damages which has been considered, and continued in this way:

"It is also permissible for the jury to award, in libel cases, what is known as 'punitive' or 'exemplary' damages; that is, damages by way of punishment to the party for doing recklessly and wrongfully an injury to another, or exemplary damage such as would be an example to the community to prevent such wrongs and injustice to society, to punish the party. Now, gentlemen of the

Digitized by Google

jury, you are to determine for yourselves, from all the evidence in this case, as to whether or not you give the party punitive damages. Look at all the circumstances and facts in the case, to see whether this publication was made under circumstances such as to entitle the plaintiff to recover punitive damages."

This portion of the charge is vigorously assailed. It is contended that it is erroneous (1) because the charge on malice was not accompanied "with a further charge that, in the absence of express malice or its legal equivalent, there could be no recovery of exemplary damages"; (2) because "the proper legal definition as to what is sufficient to authorize exemplary damages was not given by the court, and the evidence did not warrant the charge on the subject"; and (3) because the court refused to give to the jury instructions 5, 7, and 8, which were requested by the plaintiffs in error, and which read in this way:

"(5) If you find, from all the circumstances, that there was no malice on the part of any one of the defendants towards the plaintiff inducing or actuating the publication complained of against that defendant, then you can give no damages against such defendant on account of such malice."

"(7) If a newspaper is advised by officers of the law, or other persons, that a given party has been guilty of an offense, and publishes that fact in good faith, and without any actual malice against such person, mentioning the source of its information in such publication, and having reasonable ground to believe that the facts stated are true, then such defendant cannot be charged with punitive damages by reason of such publication.

"(8) The jury are instructed that it is competent for a newspaper publisher to show, in mitigation of any punitive damages sought to be recovered from it for the publication of a libel, that it acted upon information received by it, and that it had reasonable cause to believe, and did believe, that the particular publication complained of was true at the time it was made, although it may have developed, by subsequent occurrences, that as a matter of fact such statements were not true."

The relation of malice to the action of libel, and to the recovery of exemplary damages, has been purposely discussed in the earlier part of this opinion, and it is only necessary here to compare the charge of the court with the conclusions there stated. In brief, they were that malice, in the legal sense in which the court below used it, is implied from the publication of an unprivileged libel; that malice, in the ordinary sense,—that is to say, ill will, hatred, or an intent to injure the person libeled,—is not essential to the recovery of compensatory damages in an action for libel; and that exemplary damages may be recovered either when the publication is inspired by ill will or an intent to injure the victim, or when it is made with a reckless disregard of his rights. A comparison of the charge of the court with these conclusions shows that it is in strict accord with them. The court spoke of malice in its legal sense. Taken in that sense, it was implied from the publication of the libels, and it remained implied throughout the entire trial, for the purposes of compensatory, as well as of exemplary, damages. In many cases this implied malice would be insufficient to warrant exemplary damages. But this implied malice, together with a conscious indifference to, or a wanton or reckless disregard of, the rights of the defendant in error, was sufficient, even in the absence of ill will or an intent to injure, as we have already seen, to warrant an award of these damages. This was the effect of the

Digitized by Google

court's charge. There was no direct evidence of ill will, or hatred, or intent to injure the defendant in error, on the part of the publishers of these libels; and their agents testified, truthfully, no doubt, that they had none. The real question was, not whether or not these agents were inspired by spite or ill will, but whether or not they had made the publications with a wanton or reckless disregard of the rights of Carlisle. The court very properly confined its charge on this subject of punitive damages to this question. It told the jury that they might allow exemplary damages for doing recklessly and wrongfully the injury which had been inflicted upon the defendant in error, and that they must look at all the circumstances and facts in the case, and decide for themselves whether the publications were made under such circumstances as would justify such an allowance. "Recklessly" signifies with a wanton disregard of all consequences, and hence of the violation of all rights, and its use presented to the jury the proper rule for their guidance upon the question under consideration. Cent. Dict. "Reckless"; Plummer v. Kansas City, 48 Mo. App. 484; Railway Co. v. Adams, 26 Ind. 78; Cobb v. Bennett, 75 Pa. St. 330. The result is that the objections that the court did not instruct the jury that there could be no recovery of punitive damages, in the absence of express malice or its legal equivalent, and that it did not give the proper definition of what was necessary to warrant the recovery of such damages, must fall, because it declared that the publishing of libels recklessly and wrongfully was the legal equivalent of express malice, and that such a publication would warrant the recovery of exemplary damages.

The objection that there was no evidence to warrant the consideration of exemplary damages by the jury must share the same fate. A merchant of unspotted character and unblemished reputation, residing and engaged in mercantile business in the city where these publications were made, was arrested on the affidavit of a stranger, who lived hundreds of miles away, for knowingly having in his possession eight stolen cattle. This affidavit was accompanied with the usual information, verified by the district attorney of a county in Utah, and by the necessary affidavit of the assistant district attorney of the same county for a requisition, with the usual requisition, and with an order for his arrest. When he was arrested, he and his attorney protested to all the agents of the plaintiffs in error who inquired of him that he was innocent of this charge. An account of his arrest, and of the charge against him, was published, and of this he made no complaint. The sheriff of Mesa county, who arrested him, and who, so far as this record discloses, was a stranger to the agents and employés of the plaintiffs in error, said in their hearing that the defendant in error had been operating with, and associated with, and had been the head of, a gang of cattle thieves. The publication of this charge is the foundation of these suits. The defendant in error was in Kansas City. To many of the residents and citizens of that town he was not unknown. His character and reputation for honesty and integrity were easily ascertainable in the city where these publica-

Digitized by Google

tions were made. We have searched this record in vain for any evidence that, before this charge was published, any of the agents or employés of the plaintiffs in error made any effort, by inquiry of any of the acquaintances of the defendant in error, except of the sheriff of Mesa county and the police of Kansas City, who, they knew, were repeating these charges on his statement alone, to ascertain whether or not it was true, or that they ever even asked the defendant in error or his attorney whether or not he was the head of a gang of cattle thieves, or was associated or operating with them. The reputation of this man rested under the legal presumption that every man is presumed to be innocent until he is proved to be guilty, and under the still stronger presumption on which all men constantly act, in social and business transactions, that a man of 40 years of age, who has established a good reputation, would not be guilty of such a crime. The plaintiffs in error disregarded these presumptions, and published the story of the sheriff. A sworn charge of crime carries with it no presumption of truth; much less does the gossip of an officer. The trial judge thought that the publication of this story, under these circumstances, presented substantial evidence of the reckless disregard of the rights and feelings of the defendant in error, which he was not authorized to withdraw from the jury upon the question of the allowance of exemplary damages, and we are all of the same opinion.

Another contention of counsel for plaintiffs in error, under this exception, is that punitive damages cannot be recovered of their clients, because they are corporations. But the charges which they published were gathered and circulated in the course of their ordinary business by their agents who were acting within the scope of the authority and duty intrusted to them, and for "acts done by the agents of a corporation in the course of its business and of their employment a corporation is responsible in the same manner and to the same extent as an individual is responsible under similar circumstances." Railway Co. v. Prentice, 147 U. S. 101, 109, 13 Sup. Ct. 261; Railroad Co. v. Quigley, 21 How. 202, 210; Bank v. Graham, 100 U. S. 699, 702; Salt Lake City v. Hollister, 118 U. S. 256, 261, 6 Sup. Ct. 1055; Railway Co. v. Harris, 122 U. S. 597, 608, 7 Sup. Ct. 1286.

The conclusions already announced practically dispose of the refusal to give the three instructions requested. The fifth was a mere truism, from the failure to give which it is evident that no prejudice could possibly have arisen. It was a request to say to the jury, in effect, if you find no malice, you can give no damages on account of malice, or, in other words, you will give no effect to a nonexistent cause. No prejudice can arise from the refusal to give such an instruction. It may be further said that in these cases malice, in the legal sense, was implied from the publications, and the jury were not at liberty to find that it did not exist, while malice, in the sense of ill will, was not essential to a recovery, so that the only effect of the instruction, if given, would have been to mislead or to puzzle the jury. The seventh instruction was

Digitized by Google

properly refused, because it did not present the crucial question in the case,—whether or not the publications were made with a reckless disregard of the rights of the defendant in error,—while the charge of the court tersely and fairly presented it, because it was framed on the erroneous theory that there could be no recovery of exemplary damages unless the publication of the libel was inspired by actual malice or ill will, and because it assumed that the jury were at liberty to find that some of the plaintiffs in error had published the libels in good faith and with reasonable ground to believe that all the libelous matter which they published was true, when the facts proved were insufficient to warrant such findings. There was some of the libelous matter published by the World Company and some of that published by the Journal Company that there is no evidence that either of them had reasonable ground to believe; and, in the case of the Times Company, notice of the falsity of the charges was repeatedly given to its agents by Carlisle and his friends before they were published, and its city editor testified that all they knew about them from any other source was that the sheriff said he believed them. A publication under such circumstances could not have been made "in good faith." Lee v. Bowman, 55 Mo. 400; Coover v. Johnson, 86 Mo. 533. The eighth request was properly refused because it assumed that the jury were at liberty to find that some of the plaintiffs in error believed all of the libelous matter which they published, while there is no evidence in the record that any of them, or any of their agents, ever had such a belief.

On the evening of the day of the arrest, a friend of the defendant in error and his partner went to the office of the Times Publishing Company, met the city editor, told him that the charges against Carlisle contained in the article which had been published on that day in the Kansas City Star, and which was then before him, were false, and that Carlisle was innocent, and, according to the testimony of the city editor, demanded that he should print nothing about it. The article subsequently published in the Times the next morning contained substantially the same charges made in the article in the Star. When the interview with Mr. Carlisle's friend and partner took place, the Times article had been written by the police reporter, and either at or after this interview the city editor inserted a statement to the effect that the defendant in error claimed that he was entirely innocent of the charge, and then published it. Before preparing the article the police reporter had talked with Carlisle, and the latter had told him that the charge against him of receiving the stolen cattle was trumped up, and his attorney, Watson, had informed him that Carlisle could prove his innocence of it. In answer to the question why he published the statements in the Times article of charges other than that for which the arrest was made, the city editor of the Times testified:

"Now, this man Reeder. The only thing, according to his statement,—the only specific charge they could get against this man,—was he had received eight head of cattle. But this man Reeder, who came from Colorado, believed that

Digitized by Google

Mr. Carlisle was the head of an organized gang of cattle thieves. I say he believed it, and that was all we knew about it."

When the friend of Carlisle protested against the publication of the matter in the Star, the night before the Times Company published its article, this city editor replied that he intended to publish it anyway, and his assistant, or some other person in the office, added an injunction to read the Times and keep posted. It is assigned as error that the court below, in presenting this evidence to the jury, stated it incorrectly, and then instructed them, in effect, that when a newspaper is warned and notified that a charge is false, wrong, and trumped up, and then proceeds to publish it, it thereby affirms it, becomes sponsor for it, and answerable to the party injured, and that it was for them to say, under all the circumstances of the case, whether, if the Times Company published the libel, even with the addition to the effect that Carlisle claimed to be entirely innocent, it did or did not exhibit a wanton disregard of the rights of others. The testimony of the witnesses in the case of the Times Company has been carefully compared with this part of the charge of the court. There are verbal inaccuracies in the statement which the court made of this evidence. In some instances testimony attributed to one witness was given by another, but the substance and effect of the testimony relative to the action of the Times Company was clearly and fairly stated by the court, and the law was correctly declared. There was no just ground for exception to this part of the instructions to the jury.

It is assigned as error that the court below refused to permit the introduction of proof of the article in the Star, and its publication, in mitigation of damages, and that, while it admitted proof of the fact that this article was before the city editor of the Times and the friend and partner of Carlisle at the interview on the evening of February 20th, it restricted its effect to that fact. But the article in the Star was not evidence of the truth of the statements it contained, and it was not admissible in mitigation of damages in the action against the Times Company, because it was not pleaded in its answer in that case. For the same reason the offer to prove, by the testimony of the reporter of the Star, that he communicated what Reeder had told him to the reporters of the plaintiffs in error before they published their articles, was properly rejected. Neither of the answers pleaded or suggested the article in the Star or the story of its reporter as one of the sources which induced the plaintiffs in error to make such publications. In jurisdictions which have adopted the Code, matter in mitigation of damages must be pleaded before it can be proved. Rev. St. Mo. 1889, § 2081; Northrup v. Insurance Co., 47 Mo. 435, 444; Burt v. Newspaper Co., 154 Mass. 238, 244, 28 N. E. 1; Hewitt v. Pioneer-Press Co., 23 Minn. 178.

It is also assigned as error that the reporter of the Star was not permitted to testify in these actions to what Sheriff Reeder told him at the time of the arrest of Carlisle. As we have already seen, his testimony upon this subject was not competent in mitigation of damages, but it is suggested that it was admissible for the purpose of contradicting and impeaching the testimony of Reeder. A perusal

Digitized by Google

of Reeder's testimony, however, discloses the fact that no foundation was laid therein for his impeachment. No questions were asked him which would allow of his impeachment by the testimony of this reporter.

In connection with the rejection of this testimony, much complaint is made of the action of the court in the submission of the evidence upon the question of mitigation of damages to the jury. The record and the charge have been carefully examined upon this subject, with the result that it seems to us that this complaint is not warranted. The court expressly charged the jury that, while the answers did not plead justification, they set out the facts and circumstances out of which the publication of these articles grew, for their consideration on the question of the mitigation of damages, and that they should look at all the circumstances and facts in the case to see whether the publications were made under such circumstances as to entitle the defendant in error to recover punitive damages. All the requisition papers had been received in evidence. The reporters of the plaintiffs in error had been permitted to testify fully to their examination of these papers, and to all that Sheriff Reeder had told them. With this evidence before them, these instructions gave to the jury all that the plaintiffs in error had pleaded, and all that they had proved, for their consideration upon the question of mitigation of damages, and they were too plain for mistake, misconstruction, or misunderstanding.

When the charge of receiving the eight head of stolen cattle was dismissed by the court in Colorado, the World Company published an article, purporting to be signed by Sheriff Reeder, to the effect that the charge had been dismissed by the entry of a nolle prosequi, and that the defendant in error was thoroughly vindicated in a lengthy opinion on the merits of the case submitted by the district attorney. The Journal Company and the Times Company made no publication of these facts, and did not publish the fact that the defendant in error brought these actions. In its charge the court called the attention of the jury to the publication of this article by the World Company, told them that if, when a publisher ascertains the fact that he has done an injustice, he makes the amende honorable, and says he has done a wrong, he has then acted the manly part; that public opinion and juries ought to appreciate such an act; and that the jury ought to consider this later publication by the World Company in mitigation of damages. It is assigned as error on the part of the Journal Company and of the Times Company that when the court gave this charge, and while speaking of a publisher, it added:

> "But if, having slandered you and libeled you, he doggedly remains reticent from that day forth, leaving you to run down and to catch this swift-footed slander that goes through the world, that is another question for the jury."

But this statement of the court was certainly true in fact, and we are unable to discover why it is not true in law. A different question is surely presented, when a jury is to consider the damages to be allowed for a publication of a false charge of crime which has been promptly retracted, from that which is presented when it is to

Digitized by Google

assess the damages for one that has not been withdrawn. One of the crucial questions in this case was whether the publications were made with wanton indifference to, and reckless disregard of, the rights and feelings of the defendant in error. Silence after he was vindicated, and silence when he sued for the publication of the libels, presents this question in a far different light from that in which a prompt publication of the vindication places it. Publishing Co. v. Hallam, 16 U. S. App. 613, 645, 8 C. C. A. 201, 206, and 59 Fed. 530, 535.

Another portion of the charge to which objection is made reads in this way:

"One of the counsel in this case argues that Mr. Carlisle never went to the papers, and asked them to make these corrections. Gentlemen of the jury, it is not the duty—it is not required—of a citizen, when a newspaper libels him, if it does libel him, to go and hunt the libeler up, and entreat and implore him to rectify it. It is the duty of the publisher to look out for the facts, and to make corrections if the facts warrant it. It is not the duty of a man to go to them."

There is nothing questionable in this excerpt from the charge, except the last sentence but one, and that must be read and interpreted in the light of the subject under discussion when it was deliv-ered. If the question of which the court was treating had been whether or not a person libeled could recover damages for the failure of the libeler to discover the truth and publish it after he had circulated the libel, and the court had charged that he might, such an instruction would undoubtedly have been error. But this was not the subject under consideration here, and this was neither the meaning nor the effect of the declaration of the court. The question under discussion was whether or not the fact that the defendant in error did not go to the publishers, and tell them the facts, and demand a retraction, after the libels were circulated, was any justification or excuse for their original publication. The court properly charged that it was not, and the remark that "it is the duty of the publisher to look after the facts, and to make corrections, if the facts warrant it. It is not the duty of a man to go to them,"—was used tendo, only to support and enforce this rule, and not to announce other and an entirely different proposition of law, which was not the mind of either court or jury. The connection in which these words were used made it impossible for the jury to misunderstand, and in that connection their use was not erroneous.

Many assignments of error are made, and much complaint is made in, because the court below limited the effect of the requisition when they were received in evidence. An examination of exceptions discloses the fact that the real objection to this action was that the court did not permit their use for the purpose of proving the truth of the facts which they recited. The proposition that the affidavit of the complaining witness, or the affidavits of officers based upon it, constitute any evidence of the truth of charges made therein, in these actions of libel, is unworthy consideration. It is said, however, that great injustice was done because the court failed to mention in its charge the affidavit of the district attorney upon which the application for a requisi-

Digitized by Google

tion was granted. But the foundation of the requisition proceedings was the affidavit of the complaining witness, Chipman. No complaint is made that this was not mentioned to the jury. This affidavit was accompanied with the affidavit of the district attorney, or the information, and with the affidavit of the assistant district attorney, or the application for the requisition. But it is common knowledge that the affidavits of these officers are generally based upon the complaint of the witness who makes the charge. They do not purport to rest upon personal knowledge, but upon the information presented by the prosecuting witness; so that, when his affidavit is received, these formal affidavits of the officers are not of surpassing importance. Moreover, it was entirely in the discretion of the trial court to mention such affidavits, or to fail to mention them, in its charge, provided it fairly reviewed the evidence presented by the contesting parties. Our conclusion is that the failure to mention the affidavit of this assistant district attorney was the exercise of the discretion of the court in reviewing the testimony, with which we cannot interfere, and that the case presents no evidence of an abuse of that discretion, or of any injustice resulting from the manner of its exercise.

The entire charge of the court is challenged as partial and inflammatory. Careful and repeated readings of it, and of every objection made to it, have led us all to the conclusion that it was, on the whole, a just and fair presentation of the law and the facts of these cases. The truth undoubtedly is that the plaintiffs in error published the libels without special ill will or spite against Carlisle, on the theory that they were warranted in doing so because the sheriff of Mesa county made the charge they contained in the hearing of their reporters. This was a fatal mistake. Its commission left them without any defense against judgments for some amounts in these actions. The only question the cases really presented was what the amounts of the judgments should be. This was not all. The publication of the charge that Carlisle had been operating with, or associated with, or had been the head of, a gang of thieves, on the statement of this sheriff, without investigation or inquiry concerning its truth of any one but their informant and those who were repeating it on his information alone, in the face of the presumption of innocence, which the law throws around the upright man who has established a character for honesty and integrity, indicates so grave an indifference to and disregard of a right of the defendant in error deemed precious by every honorable man,—the right to the preservation of his good name unsullied,—that the court could not lawfully refrain from submitting to the jury the question of exemplary damages. We fear that counsel for the plaintiffs in error, in their criticisms of the trial court, have forgotten some of these facts. They have been instant in season and out of season in the defense of these cases. With rare skill and ability they have presented to the court below, and to this court, every consideration—every suggestion—favorable to their clients. But they were defending cases which the law forbade them to completely win. It is hard to conduct a contest that must be lost. It is trying to receive with equanimity adverse rulings that are

Digitized by Google

o a defense, although expected and known to be right. We
ıat the heat of the strife, the zeal of the advocate, and the
ıdable annoyance of inevitable defeat, have produced some
ity of vision on the part of the counsel for the plaintiffs in
when they look at the charge of the court. Some of their criti-
of it seem to us to attribute strained and unnatural meanings
in and correct declarations of law, and to apply other declara-
to subjects to which they had no reference. In some of their
sm we fear they forgot for the moment that it was the duty
: court to declare the law applicable to the facts of these cases,
nounce that the publications were not justified, and to submit
uestion of punitive damages to the jury, whatever the effect
is action might be upon the parties to the suit, while their duty
lischarged when they considered the law and the facts solely
reference to their effect upon their clients. The facts in these
were such that an impartial statement of them, and a clear and
ise enunciation of the law which applied to them, could not be
e welcome to counsel for the plaintiffs in error or to their clients.
esitating, confused, and obscure presentation of the law and the
s might have been more favorable to them, but no just exception
be taken because correct declarations of law are plainly and
ibly given, or because apt and impartial references to the salient
s of a case are made. There were, as we have said, some inac-
acies in some of the court's statements of the facts. In a few
tances testimony given or a statement made by one witness or
son was attributed to another. But the court did not undertake
recite or refer to all the evidence, the mistakes in its references
it were insubstantial and ineffective, and the whole question of
: existence and effect of the evidence was left to the jury, in whose
ovince it fell.

The more carefully we have studied the record, the rulings upon
e evidence, and the charge of the court in this case, the more firm
r conviction has grown that the trial was, on the whole, fairly
nducted; that the references to the evidence in the charge were just
ıd impartial; that the instructions to the jury contained a terse,
ear, and correct statement of the law of the cases; and that there
as no substantial error in the proceedings. This conviction is con-
rmed as we review the entire case, and the arguments and briefs of
ounsel, by the fact that the counsel for the plaintiffs in error assign
ıore than 75 errors in each of these cases, and specify in their briefs
4 upon which they rely. None of them have escaped our considera-
ion. But none of them which have not already been considered
lemand extended notice or discussion. The 48th, 49th, 50th, 51st,
nd 52d assignments are that the court did not instruct the jury to
eturn a verdict in favor of each of the plaintiffs in error; that it al-
owed the defendant in error more than three peremptory challenges
Insurance Co. v. Hillmon, 145 U. S. 285, 12 Sup. Ct. 909); that it re-
fused to permit the plaintiffs in error to prove that Carlisle had not
sued, or made any claim against, Chipman or his company for char-
ging him with receiving the eight stolen cattle; and that it refused to
permit them to show that he had never made any claim against the

Digitized by Google

Sheriff Reeder for the slander he had uttered. When counsel of the learning and ability of those who presented this case gravely announce to an appellate court that they rely upon 74 alleged errors for a reversal of judgments against their clients, and some of those specified turn out to be as frivolous as those we have just cited, it is at least difficult to resist a suspicion that they themselves were not certain there was any substantial error in the case. The judgments of the court below must be affirmed, and it is so ordered.

(94 Fed. 788.)

HUBINGER v. CENTRAL TRUST CO. OF NEW YORK.

(Circuit Court of Appeals, Eighth Circuit. May 1, 1899.)

No. 1,099.

1. MORTGAGES—INJURY TO MORTGAGED PROPERTY—RIGHT OF ACTION OF MORTGAGEE.

   A mortgagee may maintain an action at law for an injury wrongfully done to the mortgaged property, whereby its value is lessened, and his security impaired, provided he sustains an actual loss thereby, and the measure of his recovery is the amount of such loss.

2. FEDERAL COURTS—JURISDICTION—PENDENCY OF SUIT IN STATE COURT.

   The pendency in a state court of a suit to foreclose a mortgage does not preclude a federal court from entertaining jurisdiction of an action at law by the mortgagee to recover damages for the conversion or destruction of the mortgaged property, which amounts to an abandonment by the plaintiff of any claim to the property itself.

3. MORTGAGES—REVERSAL OF ORDER CONFIRMING SALE—IOWA STATUTE.

   The Iowa statute (McClain's Ann. Code, § 4429), providing that property acquired by a purchaser in good faith, under a judgment subsequently reversed, shall not be affected by such reversal, does not apply to a case where an order confirming a sale of property under a decree of foreclosure is alone appealed from and reversed, the purchaser being a party to the appeal, and on such reversal it is the duty of the purchaser to restore the property.

In Error to the Circuit Court of the United States for the Southern District of Iowa.

This is a suit wherein the Central Trust Company of New York, the defendant in error, hereafter termed the "Trust Company," sued John C. Hubinger, the plaintiff in error, in an action which is essentially an action at law to recover damages for the wrongful disposition and destruction of property which at one time constituted an electric street-railway plant in the city of Keokuk, Iowa, the same being the property of the Gate City Electric Street-Railway Company. A jury was waived, and the case was tried by consent before the court, which made a special finding of facts. From this finding we extract the following facts, in substance, which are all that are deemed essential to a proper understanding of the case: The Central Trust Company, as trustee, filed a bill to foreclose a deed of trust which was executed by the Gate City Electric Street-Railway Company of the city of Keokuk, to secure an issue of bonds amounting to $85,000, which deed of trust covered all the property and franchises of said street-railway company. The suit was brought in the superior court of the city of Keokuk, Iowa, and a decree of foreclosure was entered therein on March 21, 1894. At a sale which was made under said decree by a master on April 28, 1894, the mortgaged property was purchased by John C. Hubinger for $10,000, which sum was not sufficient to pay certain preferential claims that had been allowed in the foreclosure proceedings, and left nothing

Digitized by Google

applied on the mortgage indebtedness. The sale was approved by the su-
r court, notwithstanding objections made thereto by the Trust Company,
the property so sold was delivered to Hubinger on May 10, 1894. From the
r approving the sale the Trust Company took an appeal to the supreme
t of Iowa, on June 27, 1894, without giving bond. In the latter court the
r of the superior court confirming the sale was reversed, on January 23,
5, and thereafter, on June 9, 1896, a writ of procedendo issued from said
reme court, directing further proceedings in the foreclosure case, not incon-
ent with the opinion of the supreme court of the state. 96 Iowa, 646, 65
W. 982. Shortly after the property had been turned over to Hubinger, as
etofore stated, he surrendered the possession thereof to the J. C. Hubinger
npany, a corporation then engaged in the operation of an electric light plant
said city of Keokuk, which was controlled by said J. C. Hubinger, and on
ril 10, 1896, after the supreme court of the state had reversed the order of the
perior court confirming the sale, said Hubinger made the transfer effectual
conveying said property, with full covenants of warranty, to the J. C. Hu-
nger Company for a consideration therein expressed of $100,000. After Hu-
nger had acquired the property aforesaid at the sale aforesaid, he applied to
e city of Keokuk for a franchise to operate an electric street railway on the
reets of said city, and secured the passage of an ordinance known as "Special
rdinance No. 73," whereby there was granted to the said J. C. Hubinger
ompany, for a period of 25 years from said date, "the exclusive right to lay
own, construct, and operate a street railway on all the streets of the city of
eokuk, with single or double track, standard railway tracks, with electric or
ther practicable motor power, other than animal or steam." This ordinance
as duly accepted by the J. C. Hubinger Company, and by its terms operated
s a repeal of a previous ordinance, No. 60, granted to the Gate City Electric
treet-Railway Company, under which ordinance it had previously operated its
ailway in the streets of the city of Keokuk. The deed of trust in favor of the
Trust Company, to which reference has been made, covered the franchises
granted by said ordinance No. 60. After procuring the passage of ordinance
No. 73, and the repeal of ordinance No. 60, important changes were made by
the defendant in the location of the tracks of the Gate City Electric Street-Rail-
way Company, as they existed when the deed of trust was executed. These
changes consisted in extending the tracks at certain places, and in taking up
portions of the track on some of the streets, and laying the same on other
streets, so as to conform to the requirements of the new ordinance No. 73. All
of the machinery originally used to operate said railway, such as engines, dyna-
mos, and generators, with the exception of two boilers, were also removed from
the power house of the railway company to a power house which was owned
and used by the J. C. Hubinger Company. Before the commencement of this
suit, and after the reversal of the order approving the foreclosure sale, the
Trust Company tendered to the defendant the sum of $10,000, which he had
paid for the mortgaged property at the foreclosure sale, and demanded its re-
turn; but the defendant refused to restore it unless he was paid all further sums
which he had expended in changing, altering, and repairing it, and sundry
other sums which he had also expended. The trial court further found that by
procuring the repeal of the old ordinance No. 60, and by the changes which the
defendant had made in the mortgaged property while the same was in his pos-
session, and by dismantling the old power house, the identity of the mortgaged
property had been destroyed, so that it was no longer in existence in its en-
tirety, and could not be restored to the Trust Company. It also found that the
fair market value of said property, when the same was turned over to the de-
fendant, was $33,600. In pursuance of these findings, the trial court rendered
a judgment in favor of the Trust Company, the plaintiff below, for the sum of
$25,271.18, which sum represents the market value of the mortgaged property
as assessed by the court, less the price paid therefor at the foreclosure sale,
interest having been computed on the balance at the rate of 6 per cent. per an-
num from and after June 10, 1896, until the rendition of the judgment. The
writ of error brings this judgment before us for review.

James H. Anderson and John E. Craig, for plaintiff in error.
James C. Davis and William J. Roberts, for defendant in error.

Digitized by Google

Before CALDWELL, SANBORN, and THAYER, Circuit Judges.

THAYER, Circuit Judge, after stating the case as above, delivered the opinion of the court.

The case having been tried before the circuit court without the intervention of a jury, and the facts having been found specially, the only question open for consideration in this court is whether the facts as found by the trial judge are adequate to sustain the judgment. The findings of the trial judge, as a matter of course, cannot be reviewed. The judgment is challenged by counsel for the plaintiff in error, as we understand, on two principal grounds: First, because the Trust Company, as it is said, had no such title to the mortgaged property which was bought by the defendant Hubinger at the foreclosure sale as will enable it to maintain an action at law against the purchaser for the wrongful disposition or destruction of the property, or for his refusal to surrender it to the Trust Company upon demand; and, second, because the superior court of the city of Keokuk, in which the suit was brought, has, as it is claimed, exclusive jurisdiction of the controversy, and all matters connected therewith or incidental thereto.

Concerning the first of these contentions, it may be said that, while it is true that the Trust Company was not the absolute owner of the property in controversy, nevertheless the legal title was vested in it for the benefit and security of the mortgage bondholders, and we perceive no reason why it is not entitled to sue at law and recover the value thereof, from one who has wrongfully dealt with and dissipated it, so that it cannot be restored to the proper custody. The authorities are quite numerous that a mortgagee may maintain what would at one time have been termed "an action on the case" for an injury wrongfully done to the mortgaged property, whether it be realty or personalty, whereby its value is impaired and the security of the mortgagee lessened, provided that, as a result of the wrongful act, the mortgagee sustains an actual loss. The recovery in such cases is commensurate with the loss. Yates v. Joyce, 11 Johns. 136, 140; Van Pelt v. McGraw, 4 N. Y. 110; Edler v. Hasche, 67 Wis. 653, 31 N. W. 57; Sperry v. Ethridge, 70 Iowa, 27, 30 N. W. 4; Gooding v. Shea, 103 Mass. 360; Allison v. McCune, 15 Ohio, 729; Mitchell v. Mining Co. (Cal.) 17 Pac. 246–257; Heath v. Haile (S. C.) 24 S. E. 300. The special finding shows that the mortgaged property had been dissipated by the wrongful acts of the defendant, and that he refused to restore it, and could not in fact restore it in its entirety, when, upon the reversal of the order confirming the foreclosure sale, it became his duty to restore it to the Trust Company. Inasmuch as the mortgagor company seems to have been utterly insolvent at that time, the mortgagee's security became impaired to the full extent of the value of the mortgaged property when it was purchased by the defendant, and we know of no reason why the defendant may not be compelled to respond for its value in an action at law.

We are also of opinion that the second ground on which the judgment below is contested is equally untenable. If the case at

Digitized by Google

ere one in which the Trust Company was seeking to recover ortgaged property or any specific part thereof, or to enforce against the same, it may be conceded that the action could maintained because of the pendency of the foreclosure suit state court. By the commencement of that suit, the court ich the bill was filed acquired an exclusive jurisdiction over ortgaged property, and any attempt to enforce a claim t the property itself, or any specific part thereof, must be n the state court. Merritt v. Barge Co., 49 U. S. App. 85–93, C. A. 530, and 79 Fed. 228; Gates v. Bucki, 12 U. S. App. 69, A. 116, and 53 Fed. 961; Zimmerman v. Sorelle, 49 U. S. App. 5 C. C. A. 518, and 80 Fed. 417. As has already appeared, er, the case at bar is not one in which the Trust Company to recover the property, but it is essentially an action at law over damages for its waste and destruction. It is a suit in personam, which contemplates no interference with the ged property, and requires no reference thereto, further o ascertain its value at a certain date, and what has since lone with it. The bringing of this suit by the Trust Com- pon the theory that the mortgaged property had been de- l by the wrongful conduct of the defendant, and was no available as a security, was a practical abandonment by the gees of all claim to the property, and an election on their take a money judgment for its value. It is probably true e state court would have had adequate power, by orders n the foreclosure suit at the instance of the Trust Company, compelled Hubinger to account for its value; but we think was under no obligation to seek for such relief in that suit, s entitled, upon the facts found by the trial court, to sue at r the damages which it had sustained. Buck v. Colbath, 3 334; Stanton v. Embrey, 93 U. S. 548; Garabaldi v. Wright, . 416, 12 S. W. 875.

as suggested on the oral argument, and some stress seems to on the point in the brief, that the defendant below was not l to restore the property which he purchased at the fore- sale because of a provision found in the Iowa Code (Mc- Ann. Code, § 4429) to the effect that "property acquired urchaser in good faith, under a judgment subsequently re- shall not be affected by such reversal." It is obvious, how- hat Hubinger is not within the protection of this provision Code, as the trial court very properly held (87 Fed. 3–8), e the judgment under which he purchased was not reversed, nains undisturbed to this day. The only proceeding which allenged by the appeal to the supreme court was the order ing the sale, and the defendant below was a litigant before reme court, endeavoring to maintain that the order was not ous. We fully agree with the trial court that the defendant t a purchaser under "a judgment subsequently reversed," that reason was not protected by the aforesaid provision of the nd that he was bound to restore the mortgaged property the order approving the sale was reversed. Some other

Digitized by Google

points are discussed in the brief of counsel for the plaintiff in error, but they are not of sufficient moment to deserve special notice. The judgment below was for the right party, and it is hereby affirmed.

(94 Fed. 792.)

COOPER et al. v. NEWELL et al.

(Circuit Court of Appeals, Fifth Circuit. May 31, 1899.)

No. 511.

EVIDENCE—RECORD IN COLLATERAL SUIT.

In an action in a federal court in which it was sought to collaterally impeach a prior judgment of a state court, the admission in evidence of the record of a second suit in the state court, commenced by the person against whom the former judgment was rendered, to relieve himself therefrom, for the sole purpose of showing due diligence on his part, is not reversible error.

In Error to the Circuit Court of the United States for the Eastern District of Texas.

F. Chas. Hume, for plaintiffs in error.

Henry W. Rhodes and Thos. H. Franklin, for defendants in error.

Before PARDEE and McCORMICK, Circuit Judges, and NEWMAN, District Judge.

PER CURIAM. The controlling question in this case, to wit:

"Was the judgment of the district court of Brazoria county, Texas (said court being a court of general jurisdiction), in the case of Peter McGreal v. Stuart Newell, subject to collateral attack in the United States circuit court for the Eastern district of Texas, sitting in the same territory in which said district court sat, in this suit, between a citizen of the state of New York and a citizen of the state of Texas, by evidence aliunde the record of the state court, showing that the defendant, Stuart Newell, in said suit in said state court, was not a resident of the state of Texas at the time the suit was brought, nor a citizen of said state, but a resident citizen of another state, and that he was not cited to appear in said suit, and that he did not have any knowledge of said suit, and that he did not in fact appear in said suit, and that he did not authorize J. A. Swett, the attorney who purported to appear for him in said suit, to make any such appearance, and that the appearance by said attorney was made without his knowledge or consent?"

—was certified to the supreme court, and has been answered in the affirmative. (Opinion not yet officially reported) 19 Sup. Ct. 506. The trial court admitted in evidence the transcript of the proceedings and judgment of the district court of Brazoria county, Tex., in the suit numbered 3,542, filed August 20, 1876, by Stuart Newell against the heirs of Peter McGreal, not as a muniment of title, but for the sole purpose of showing diligence on the part of Stuart Newell in relieving himself of the aforesaid judgment of the Brazoria court in said case No. 1,527 (Peter McGreal v. Stuart Newell). This was not reversible error.

The other questions raised by the assignment of errors are not insisted upon, and the judgment of the circuit court is affirmed.

Digitized by Google

(94 Fed. 793.)

In re FRANCIS-VALENTINE CO.

(Circuit Court of Appeals, Ninth Circuit. May 16, 1899.)

No. 538.

UPTCY — DISSOLUTION OF LIENS — POSSESSION OF PROPERTY UNDER
r.
here actions are begun in a state court, and writs issued and levied
roperty of an insolvent debtor, within four months before the insti-
n of proceedings in involuntary bankruptcy against him, the trustee
titled to recover possession of such property from the sheriff holding
same under the levy, notwithstanding the pendency of an action of
vin in a state court against the sheriff by a stranger claiming own-
p of the property; and the court of bankruptcy has jurisdiction to
the surrender of the property on summary petition by the trustee.
-SHERIFF'S FEES.
sheriff, holding property of an involuntary bankrupt under writs
d within four months before the commencement of the proceedings
ankruptcy, has no right, as against the trustee, to retain posses-
of the property until payment of his fees. Such fees are taxable
e court from which the writs issued, and, when there taxed and al-
l, may be made the basis of a claim in the court of bankruptcy

on for revision of an order of the district court of the United
or the Northern district of California, in bankruptcy. For
of the court below, see 93 Fed. 953.

, Campbell & Metson, for petitioner.
n & Young, for respondent.

GILBERT, ROSS, and MORROW, Circuit Judges.

ERT, Circuit Judge. The jurisdiction conferred upon this
subdivision b of section 24 of the bankruptcy act of July
is invoked in behalf of Richard I. Whelan, formerly the
f the city and county of San Francisco, in a petition which
at, at the time when the Francis-Valentine Company was
l a bankrupt, certain of its property was in the possession
id Whelan, as sheriff, having been levied upon by him under
attachment and executions issued out of the superior court
tate of California in and for the city and county of San
o in actions then pending, in which the bankrupt had been
ndant; that on April 10, 1899, the trustee of the estate of
krupt, under appointment of the district court of the United
r the Northern district of California, filed in said district court
vit setting forth the facts that the trustee had taken posses-
aid estate under the provisions of the bankruptcy law, and
said Whelan claimed to be in possession of portions of said
, and was interfering with the trustee's possession of the
at upon said affidavit an order was made requiring the said
to show cause why an order should not be made command-
not to interfere with or disturb the trustee's possession of
krupt's property; that upon the order to show cause the
leged his right to the possession of the property to consist

Digitized by Google

in the fact that he held the same under writs of attachment and execution on behalf of certain creditors of the bankrupt, and so held the same on the day when said corporation was adjudged a bankrupt, and that the said writs were not dissolved by the adjudication in bankruptcy, and that he still possessed the right to retain the possession of said property, and had been notified by the plaintiffs in said actions not to surrender the possession of the same. He further alleged that prior to the adjudication of the bankruptcy, and while he held said property under said writs, the American Type Founders' Company commenced against him an action of claim and delivery in the superior court of the city and county of San Francisco, state of California, to recover the possession of a portion of said attached property, consisting of a printing press, which said American Type Founders' Company claimed to own; that in said action, upon due proceedings had, and filing an undertaking therefor, the said printing press was taken from the possession of the said sheriff; that thereafter the said sheriff, as defendant in said action, pursuant to law, did file a bond in the sum of $4,000 for the return of the said printing press to him, whereupon it was returned to his possession; that he would have sold the same upon said writ on October 12, 1898, but for a writ of injunction forbidding the sale, issued out of the said district court in proceedings against said bankrupt; that the action of claim and delivery commenced by the American Type Founders' Company is still pending and undetermined.

Upon the petition filed in this court it is contended: First, that the district court had no jurisdiction upon an order to show cause to take the property from the petitioner's possession while he was still holding the same under said writs; second, that the district court had no jurisdiction by such proceedings to summarily adjudicate the title to a portion of said property to be in the bankrupt's estate, while an action in replevin was pending against the petitioner in a court of competent jurisdiction under a claim of ownership in the plaintiff in said action, for the reason that, if judgment be rendered in said action against the petitioner, he will be required to answer for property which has been taken from him without due process of law.

In support of the first contention the petitioner cites and relies upon certain cases, of which the principal is Marshall v. Knox, 16 Wall. 551. In that case a lessor of the bankrupt had caused the sheriff, under a writ of provisional seizure, to take possession of certain property of the bankrupt, which the lessor claimed the right to hold as a pledge for the payment of rent which was due him. It was held that the district court, sitting in bankruptcy, had no jurisdiction to proceed by rule to take the goods from the possession of the sheriff. The court, referring to the seizure of the goods, said: "The landlord claimed the right thus to hold possession of them until his rent was satisfied. This claim was adverse to that of the assignee." These words quoted from the opinion fully explain the ground of the decision. It was because the claim was adverse to that of the assignee. In the present case the sheriff had possession, not in opposition to the right of the bankrupt, nor in antagonism to its title, but his possession was based entirely upon the assump-

Digitized by Google

that the title was in the bankrupt. Upon the adjudication of ıruptcy the sheriff's right to the possession terminated, for the s were dissolved, and upon the appointment of a trustee in bank- cy the right to the immediate possession vested in the latter. 'e was no question of conflicting claims to be adjudicated by the 'ict court. Nor had the sheriff the right to retain the posses- of the property until his fees were paid. His claim for fees, his lien therefor, if he has one, will be protected in the court ankruptcy. No difficulty is presented from the fact, suggested he petitioner, that the sheriff's costs had not been taxed, and the district court had not the jurisdiction to tax the same. His were still taxable in the court in which the writs were issued, as allowed in that court, will be the basis of his claim in the ıruptcy court.

ıe pendency of the action of replevin against the sheriff on behalf ıe American Type Founders' Company is not ground for holding the portion of the property involved in that litigation shall not elivered to the trustee. The possession which the sheriff had of property was not for the benefit of the American Type Founders' pany, but was antagonistic to it. The intervention of bank- cy devested the sheriff of his possession, just as it would have 'sted the possession of the bankrupt itself in case a like action been commenced againt the bankrupt by the same party plain- The sheriff had no right to the possession of the printing press, pt upon the theory that the title was in the bankrupt. The prop- having been once taken from his possession, upon a proper bond ished by the American Type Founders' Company, in again secur- the possession by a counterbond the sheriff asserted and relied ı the bankrupt's title. The American Type Founders' Company ot a party to the proceeding in the bankruptcy court, and its ts are in no way affected by the order upon the sheriff. It is not 'esented in the present proceeding. The question is purely one he respective rights of the sheriff and of the trustee of the estate he bankrupt. We find no error in the order of the district court, the petition will be dismissed.

(94 Fed. 799.)

CAMP v. ZELLARS.

(Circuit Court of Appeals, Fifth Circuit. June 1, 1899.)

No. 836.

KRUPTCY—JURISDICTION—SUITS BY TRUSTEE.

The district court, as a court of bankruptcy, has no jurisdiction of a petition by a trustee in bankruptcy for the cancellation of a conveyance of land previously made by the bankrupt to his wife, and alleged to have been fraudulent as to creditors, and for the recovery of the land for the benefit of the estate, nor to enjoin the bankrupt's wife from prosecuting a suit against the trustee to recover personal property claimed by her.

Digitized by Google

Petition for Revision of Decision of the District Court of the United States for the Northern District of Georgia.

H. A. & B. T. Camp were duly declared bankrupts as a partnership and as individuals. T. M. Zellars was appointed trustee of the estates of said bankrupts. After the passage of the bankruptcy act, and within four months of the time in which the petition in involuntary bankruptcy was filed in this cause, H. A. Camp conveyed certain real estate to his wife, Mrs. C. B. Camp, and placed her in possession of the same. T. M. Zellars, as trustee, filed a petition in said United States district court against Mrs. C. B. Camp, seeking to have said conveyance canceled, and to recover said lands for the benefit of the estate. The petition of said trustee is in the nature of a suit to cancel the said conveyance as fraudulent. The petition also alleges that Mrs. C. B. Camp has brought certain suits against the trustee to recover personal property claimed by her. The petitioner seeks to have these suits enjoined. Mrs. Camp filed a demurrer to this petition, upon the ground that the district court had no jurisdiction to hear and determine the question, and because the controversies referred to in said petition must be determined by a separate action at law or in equity, they being no part of the bankruptcy proceedings proper. This demurrer was overruled by the district court. The matter is brought to this court by a petition filed by Mrs. C. B. Camp, alleging that the district court erred in overruling the demurrer, and praying that this court superintend and revise the action of the district court.

H. A. Hall, for petitioner.

Alex. W. Smith, for respondent.

Before PARDEE, McCORMICK, and SHELBY, Circuit Judges.

PER CURIAM. We are of the opinion that the district court erred in overruling the demurrer. The judgment of the district court is reversed. The district court is directed to sustain the demurrer of Mrs. C. B. Camp to the said petition filed by T. M. Zellars, trustee. Bernheimer v. Bryan, 35 C. C. A. 592, 93 Fed. 767.

(94 Fed. 801.)

SELLERS et al. v. BELL.

(Circuit Court of Appeals, Fifth Circuit. May 31, 1899.)

No. 818.

1. BANKRUPTCY—DISCHARGE—KEEPING BOOKS OF ACCOUNT.
   The bankrupt's omission to keep books of account cannot be made a ground of opposition to his discharge, when it appears that, since a time more than three years prior to the passage of the bankruptcy act, he has not been engaged in any business to which the keeping of books would be necessary or appropriate.
2. SAME—SCHEDULES—JUDGMENT—DEBT.
   Where a judgment previously recovered against the bankrupt still appears on the records of the court, which rendered it as an unsatisfied obligation against him in favor of the judgment creditor, it is rightly included in the bankrupt's schedule as a debt due to that creditor, although it has actually been sold to another creditor, and the bankrupt is chargeable with knowledge of the sale.
3. SAME—MONEY BORROWED FOR ATTORNEY'S FEE.
   Where a proposed voluntary bankrupt, who has no property except such as is exempt, borrows $50, wherewith to pay the fees and costs of his attorney, just before filing his petition, he is not required to list the amount

Digitized by Google

so borrowed in his schedule of assets, and his omission to do so is no ground of opposition to his discharge.

SAME—EXEMPT PROPERTY—WEARING APPAREL.

Under Code Ala. § 2037, exempting from execution personal property to the amount of $1,000, and, in addition thereto, "all necessary and proper wearing apparel," a watch may be included in the term "wearing apparel"; and consequently, where the schedule of a voluntary bankrupt disclosed no assets except as appeared in the item "personal wearing apparel, $100," which he claimed as exempt, he is not guilty of making a false oath to such schedule, so as to bar his discharge, although it is shown that he owned a gold watch worth $50, which he habitually wore, and which he intended to include in the item mentioned.

SAME—CLAIM AGAINST BANKRUPT'S WIFE.

Where a husband, being at the time in business and enjoying good credit, advanced to his wife a sum of money to enable her to complete a purchase of realty for her own benefit, but took no note for the amount, and made no entry or memorandum of the loan, and never asked for repayment, and, being subsequently adjudged bankrupt, testified that his wife owed him the money, but that he did not exact it of her, *held*, that his omission to include this claim in his schedule of property would not bar his right to a discharge in bankruptcy, especially as the money, if repaid, would be claimable by the bankrupt as part of his statutory exemption, except as against a single creditor holding a note with waiver of exemption.

6. SAME—FILING FEES—POVERTY AFFIDAVIT.

A voluntary bankrupt, whose petition is accompanied by an affidavit that he is without and cannot obtain the money necessary to pay the filing fees, cannot subsequently be required to pay such fees out of any property set apart to him as exempt, or out of money earned by him after the filing of the petition.

7. SAME.

A proposed voluntary bankrupt, who has not money enough to pay the filing fees, is not required to solicit gifts or loans from his friends for that purpose; and he is not guilty of a false oath in making affidavit that he "cannot obtain" the requisite sum, although it appears that friends would have advanced him the amount if requested.

Appeal from the District Court of the United States for the Middle District of Alabama.

Willis V. Bell, the appellee, resides in Montgomery county, Ala. Having caused to be prepared a petition to the court of bankruptcy praying for the benefit of the bankrupt act, to be adjudged a voluntary bankrupt, and to have a discharge from all his debts provable under the act, on September 8th he made affidavit before a notary public to this petition and to Schedules A and B attached thereto, and to a statement in writing "that he is a poor man; that he is not possessed of sufficient means and is not actually able to pay the deposit of twenty-five ($25) dollars for court costs in the above-entitled cause." On the same day these papers were submitted to the clerk of the court of bankruptcy by the appellee's attorneys, Reese & Sternfeld. The clerk declined to receive and file them, because the affidavit did not state that he could not obtain the money. On being advised of this (at his home), he went to Montgomery, and, with his consent, there was added, to the affidavit that he had made of inability to pay costs, the words, "And that he cannot obtain the money with which to pay said fees." Thereupon, on September 12th, the clerk filed the papers, and the cause duly proceeded. Schedule A showed the names of 21 creditors whose claims were in judgment, aggregating in amount $41,341.42, and 15 creditors who had not sued their claims to judgment, whose claims aggregated in amount $4,435.31. Schedule B, omitting the signature and affidavit thereto, was as follows:

"Schedule B.

"Statement of all real and personal estate and effects whatever of Willis V. Bell, with his claim of exemptions of personal property and effects excepted from the operation of said act by the provisions of section —— thereof:

Digitized by Google

Real estate, none; personal wearing apparel, $100,—which said personal property is claimed as exempt from levy and sale under execution or other process for the collection of debts, under section 2037 of Code of Alabama 1896, and which is excepted from the operation of the act of July 1, 1898, by the provisions of section —— thereof."

On the same day that these papers were filed the petitioner was adjudged to be a voluntary bankrupt.

At the first meeting of creditors, held October 5th, the appellants appeared before the referee by counsel. Only the appellants had then or have ever proved their debts against this bankrupt, and hence they alone, of the numerous creditors, appeared at that meeting or at any subsequent stage of these proceedings in bankruptcy. On October 5th the appellee also appeared before the referee, and was cross-examined by counsel for the appellants. The referee's report of that examination is as follows: "At Montgomery, October 5, 1898. Willis V. Bell, the bankrupt, being duly sworn, deposes and says: I stay at Ada. My wife and children are living at Ada. I am 46 years old. I am superintending a farm for N. J. Bell and a commissary store for him. We have never had a definite understanding about salary. I was to have a living. That understanding has been in vogue since December, 1894. Contract verbal, and not in writing. We have had no settlement. N. J. Bell looks over his books about twice a year. This understanding includes a living for my family as well as myself. Nothing said about spending money. I get money, besides my living and clothes, to pay tuition for the children and the doctor's bill. I have a pass on the Midland Railroad, and don't pay fare. I go to see my father once a year, and pay my fare on the Louisville & Nashville Railroad. My wife has some money, and I get it from her every time I want it, if she has it. I cannot tell always where I get the money from. Sometimes I sell an old suit of clothes, and get four or five dollars. My wife has some money,—a steady income. It don't amount to much this year. The rents amount to about 24 bales for the year. She had some of the property when we married,—about $400 or $500. She got a place that she bought in 1891. I think she paid about $1,400 for it. I believe that was all she had. She had got one place she bought since then for $2,000, paying $1,000 cash and $1,000 on time, secured by a mortgage which is now held by my brother N. J. Bell. She has two or three little places. She has 80 acres of land she paid $100 for, and another 80 she paid $300 for. She owns the following named places: The Webster place, that she paid $1,400 for; the place called the Woodson place, for which she paid $100; then she has another tract called the Giddins place. I think she paid $300 for that. She has the Moseley place, for which she paid $2,000, as stated above. She derives all her income from these places, except some houses and lots in Ramer and 40 acres of land near Ramer. She had a storehouse there, but I moved it away. She has three dwelling houses and lots there. I reckon they are worth about $300 apiece. The store lot is worth about $50. Two of them are not rented now. Two of them, when last rented, rented for $4. The other rented for $5 a month. One was rented up to August last. The other rented a while last spring. We got $50 a year for the 40 acres of land near Ramer up to this year. This year we got $40. I married in 1890. My wife has one place—the Webster place—that she has been getting $250 to $350 a year for. She accumulated the money, and I kept it for her mostly. We usually kept it about the house, sometimes in the wardrobe. She bought the Webster place in the summer of 1891. We did not get the rent that year. I bought it from —— Webster, who lives at La Pine. I paid $1,400 for it,—$500 cash and the balance in the fall. My wife had $500 or $600, and I let her have some in the fall of 1890 or 1891,—at the time the purchase was made,—and some when the final payment was made. To the best of my recollection I let her have as much as $500 at the time the last payment was made. She had the lots at Ramer when we were married. My wife bought the $2,000 plantation about two years ago, since I failed. We bought from a man named Laird, of Colburg. My wife had the money. She got it from rents of her places. She has never paid me back the money I loaned her. I never loaned her any other money. I took no note for the money I loaned her, and made no entry on any book, and made no other memorandum of it, and I do not keep any books between my wife and myself.

Digitized by Google

I never asked her to pay it back to me. You might say that she owes it. She really owes it; but I do not exact it of her. The arrangement I have with N. J. Bell includes my living and living for my family, and amounts to between $600 and $800. My brother limits me to an expense account of not over $800. I get a little money on that account, and charge it to myself. The largest amount I recollect getting under this arrangement from the store was $75 or $100,—not over $100. I have been in the mercantile and farming business a long time. I failed and went out of business in 1894. The arrangement went into effect in January, 1895, and has been in effect ever since. When I failed, N. J. Bell took all the property on hand at that time, and none of my other creditors got anything. I put down in my schedule personal wearing apparel at $100, comprising all my estate. I have a gold watch worth $50, and had it at the time I made out the schedule. I had no other property. The most of my accounts on hand when I failed were secured by mortgage, and have been transferred to N. J. Bell. I know there are some accounts on my old books due and uncollected. They are all out of date and barred by statute of limitations. Q. You have stated these accounts are barred by statutes of limitations; do you know how long it takes for the statute of limitations to bar an account? A. I think it takes three years to bar an account stated. Q. How long does it take to bar an open account? A. About two years I think. I have kept no books since I suspended business in the fall of 1894. I had a diamond stud which could be worn as a ring. I gave it to my wife when we were married. I gave $150 for it. I made the affidavit of inability to pay court fees [shown here, the same being the one now on file]. I think the affidavit was as it now is when I swore to it. There was some change made in the affidavit as originally prepared; but the changes were made with my knowledge, approval, and assent, and the affidavit, as it now stands, was sworn to by me. The only man I talked to about getting the money to pay for this bankruptcy proceeding was my brother, N. J. Bell, and he asked me, 'What's it going to cost?' I told him I did not know, but would see a lawyer and find out. He told me, if it cost over $50 or $75, he advised me not to have anything to do with it. After I filed the pauper's oath, Mr. Bernard Frank came to me and said it was too bad; that he and several of my friends would have let me have money, if I had come to them. I did not say anything to N. J. Bell about letting me have this $25 deposit fee after I had decided to go into bankruptcy. I did not ask my wife to let me have the $25 to make this deposit fee. I never asked anybody to let me have it. I borrowed from Freeman Rushton fifty dollars just before I made the affidavit of inability to pay court costs, and had $35 of it at the time I first made the oath. Between that time and the time the oath was changed I paid my attorneys $25, and I think I paid to my attorneys the other $10 for advertising or costs, or something of that kind. The balance of the fifty dollars, to wit, fifteen dollars, I might have bought goods for myself and family with. Still have two or three dollars at this time. [Signed] W. V. Bell."

On February 7, 1899, the bankrupt presented his petition for discharge, which is as follows: "W. V. Bell, of Ada, in the county of Montgomery and state of Alabama, in said district, respectfully represents that on the 12th day of September last past he was duly adjudged bankrupt under the acts of congress relating to bankruptcy; that he has duly surrendered all his property and rights of property, and has fully complied with all the requirements of said acts and orders of the court touching his bankruptcy. Wherefore he prays that he may be decreed by the court to have a full discharge from all debts provable against his estate under said bankrupt acts, except such debts as are excepted by law from such discharge."

On February 15th the judge of the court of bankruptcy made the following order: "For good and sufficient reasons shown, it is ordered that the affidavit of inability to pay filing fees of the petitioner filed herein, with the petition herein, be stricken from the file in this case, and that the petitioner be, and he is hereby, permitted to withdraw said affidavit."

On the 18th the appellants Sellers & Orum filed the following: "Sellers & Orum, of Montgomery, in the county of Montgomery and state of Alabama, parties interested in the estate of said W. V. Bell, bankrupt, do hereby oppose the granting to him of a discharge from his debts, and for the grounds of such

Digitized by Google

opposition do file the following specifications: (1) That said W. V. Bell did knowingly, willfully, and fraudulently not attach a full, true, and correct schedule of all his property to his petition to be adjudged a bankrupt. (2) That the schedule of his property which W. V. Bell attached to his petition to be adjudged a bankrupt is willfully and knowingly false and untrue, in that it does not contain a debt of about $600 which was due from the said Bell's wife to him. (3) That said schedule of his property attached by said Bell to his petition is willfully and knowingly false and untrue, in that the said Bell does not include in said schedule a gold watch worth about $50, which his testimony shows he owned at the time said petition was filed. (4) That said schedule of his property attached by said Bell to his petition is willfully and knowingly false and untrue, in that said Bell had at the time of filing said petition a sum of money, to wit, $50 or other sum, as shown by his testimony on his examination, which said Bell has never turned over to the trustee in this proceeding. (5) That said W. V. Bell willfully and knowingly swore falsely when he made the pauper's oath to the petition, swearing that he did not have, and could not obtain, money to deposit as costs and fees. (6) That the said W. V. Bell willfully and knowingly swore falsely when he made the pauper's oath to the petition, swearing that he did not have, and could not obtain, money to deposit as costs and fees, in that he had $50 or other large sum when he made said affidavit. (7) Because said Bell willfully and fraudulently has not turned over any property to the trustee in this proceeding. (8) That the said Bell willfully and knowingly negligently failed to keep, for several years prior to filing said petition, any books of account or other books showing his assets and liabilities, so that the same might be ascertained in this bankruptcy proceeding. (9) That the laws of Alabama do not allow the said W. V. Bell any exemptions of personal property against the debt of this creditor, and that the said Bell has willfully and knowingly failed to turn over to the trustee the property set out in the schedule attached to his petition in this cause or the other property he owned, as shown by his own testimony in this case. (10) These creditors are informed and believe, and upon such information and belief state, that the list of creditors filed by said Bell is willfully and knowingly incorrect and false in this: that D. M. Snow & Co. appears as a creditor for the sum of eleven hundred one and $^{96}/_{100}$ dollars, when, at the time said petition was filed, said D. M. Snow & Co. was not a creditor of said Bell. (11) These creditors are informed and believe, and upon such information and belief state, that the said Bell paid D. M. Snow & Co. in full, or compromised their claim and settled it in full, before he filed his petition in this cause, and that D. M. Snow & Co. were not creditors, and the list of creditors returned by said Bell with his petition is willfully and knowingly untrue and incorrect."

After the filing of the foregoing, Sellers & Orum added to the specification of the grounds of their objection to the discharge that "the said Bell, before he filed his petition in bankruptcy in this court, and in contemplation of the filing of said petition, offered to petitioners (creditors), and stated to them, that he intended to file his petition in bankruptcy, but that he intended to pay them what he had paid other creditors, notwithstanding he got discharged from their debts." At the same time and by the same counsel the appellants W. B. Jones and Ray filed identically the same objections, except specification 9, not applicable to their case, as their judgment was not on a waive obligation.

At the instance of the appellants, a second examination of the bankrupt and an examination of other witnesses was had by and before the referee on the 1st and 2d days of March. From the report of that examination we make these excerpts: "Q. (by the appellants' counsel). I believe that you testified on your former examination that you had $50 in your pocket. A. No, sir; I do not think I did. Q. Well, how much did you have on your person? A. I do not know how much I had at the time when the change was made in the paper. I did not have $50. I might have had two or three dollars. I do not remember. Q. Did you have $25? A. I did not have $25. Q. When you first submitted the affidavit to the clerk, did you have any money in your pocket? A. I think I just had a little change. Q. When you submitted the affidavit to the clerk the second time, did you have any money in your pocket? A. I do not think I had." From the testimony of John A. Sellers: "Mr. Bell never offered me at any time anything not to oppose his discharge." From

Digitized by Google

the testimony of W. B. Jones: "I have had no conversation with W. V. Bell since he went into bankruptcy. He never made me any offer, or offered me any inducement not to oppose his discharge." From the testimony of the clerk, questioned by the attorney for the appellee: "Q. Did any one pay the fees, what is known as the primary or original cost fees, for filing the petition in bankruptcy in the matter of W. V. Bell? A. I think, Mr. Wilkinson, you paid the fees yourself. Q. How was it done, by check or in money? A. My recollection is that it was done by giving your check. Q. Was Mr. Reese or Mr. Sternfeld present when that was done? A. No, sir. Q. Did they have anything to do with it, or have any knowledge of it? A. I do not know anything about their knowledge. They certainly were not present. Q. Was W. V. Bell present? A. No, sir; he was not. Q. Was it done with his knowledge, so far as you know? A. I cannot say. I suppose it was done by you as his attorney. I suppose you were acting for him. He was not present. Q. You know nothing, then, except the mere fact that one Charles Wilkinson paid the fees of $25? A. Yes, sir; that is all I know about it. Q. Was there what is known as the 'inability oath' made in this case? A. There was. Q. Do you know, as a matter of information connected with your office, that the judge of this district, as well as judges in other districts, have stated judicially that they would refuse to allow a discharge in bankruptcy to a man who has taken that oath? A. I do not understand clearly about this proposition. I have not looked into the question very closely. Once I heard some discussion about the question in a vague, hazy way. We have discharged one man who made that oath without paying his fees."

On March 25th the court of bankruptcy rendered the following judgment: "Whereas, Willis V. Bell has been duly adjudged bankrupt under the act of congress establishing a uniform system of bankruptcy throughout the United States, and appears to have conformed to all the requirements of law in that behalf, it is therefore ordered by the court that said Willis V. Bell be forever discharged from all debts and claims which by said act are made provable against his estate, and which existed on the 12th day of September, 1898, on which day the petition for adjudication was filed by him, excepting such debts, if any, as are by said act excepted from the operation of a discharge in bankruptcy."

The creditors appealed, and present the following assignment of errors: "(1) That the court erred in rendering a judgment granting a discharge to said Willis V. Bell from all debts and claims which were provable against his estate, and which existed on the 12th day of September, 1898, excepting such debts as are by the act of bankruptcy excepted from the operation of a discharge in bankruptcy. (2) That the court erred in not sustaining the objections filed to the discharge of the said Willis V. Bell, as shown by the record. (3) That the court erred in refusing to grant said Willis V. Bell a discharge in bankruptcy from his debts provable under the act of congress approved July 1, 1898, entitled 'An act to establish a uniform system of bankruptcy throughout the United States.' (4) That the court erred as shown by the record."

John D. Roquemore and Robert L. Harmon, for appellant.
Charles Wilkinson, for appellee.

Before PARDEE, McCORMICK, and SHELBY, Circuit Judges.

McCORMICK, Circuit Judge, after stating the case as above, delivered the opinion of the court.

It is to be observed that the petition in this case was presented before the general orders and forms in bankruptcy were prescribed by the supreme court. The general orders were adopted and established November 28, 1898, to take effect January 2, 1899. The forms in bankruptcy were not promulgated until December —, 1898. The attorneys who prepared the petition and schedules and their verification in this case had to use such forms as seemed to them to fit the provisions of the statute and the conditions of the estate. It is made

Digitized by Google

the duty of referees to examine all schedules of property and lists of creditors filed by bankrupts, and to cause such as are incomplete or defective to be amended. Bankruptcy Act, § 39 (2). In this case the honorable referee has not on his own motion caused to be amended the schedules attached to the appellee's petition. The appellants, who were the only creditors that have appeared before the referee to prove up their claims, have taken no action nor made any direct motion before the referee to have these schedules amended. On the day fixed by the referee for the first meeting of creditors, the appellee promptly appeared and submitted himself "to an examination concerning the conduct of his business, the cause of his bankruptcy, his dealings with his creditors and other persons, the amount, kind, and whereabouts of his property, and, in addition, all matters which may affect the administration and settlement of his estate," so far as the referee or the counsel for the creditors who were present deemed necessary then to make inquiry. Five months thereafter, at the instance of the same creditors, he again appeared before the referee and submitted to such further examination as the counsel for the creditors chose to make. In the report made by the referee of the appellee's depositions on these two several occasions, there is nothing tending to show that he refused to answer or hesitated in answering any question propounded to him by the referee or by the counsel for the creditors. There is nothing in his testimony or in that of the other witnesses who deposed on the second occasion to show or indicate in the slightest degree that he did not answer fully and truly every question that was propounded to him. It is the duty of the judge of the court of bankruptcy to hear the application for a discharge and such proofs and pleas as may be made in opposition thereto by parties in interest, and investigate the merits of the application and discharge the applicant, "unless he has (1) committed an offense punishable by imprisonment as herein prescribed; or (2) with fraudulent intent to conceal his true financial condition, and in contemplation of bankruptcy, destroyed, concealed, or failed to keep books of account or records from which his true condition might be ascertained." Section 14b. The second of these statutory grounds for refusing to grant the discharge is not applicable to this case, because all the proof shows that the appellee has not, since the passage of the act of bankruptcy, nor within more than three years before the passage of the act, been engaged in business on his own account that required or made it appropriate for him "to keep books of account or records from which his true condition might be ascertained." As provided in the act of bankruptcy, the offenses punishable by imprisonment which the bankrupt may commit are:

"Having knowingly and fraudulently (1) concealed while a bankrupt, or after his discharge from his trustee, any of the property belonging to his estate in bankruptcy; or (2) made a false oath or account in, or in relation to, any proceeding in bankruptcy; (3) presented under oath any false claim for proof against the estate of the bankrupt or used any such claim in composition personally or by agent, proxy, or attorney, or as agent, proxy, or attorney." Section 29b.

The appellee in this case has not presented under oath or otherwise any claim, true or false, for proof against his estate. Hence this

Digitized by Google

third subdivision under which a bankrupt may commit an offense, because he is allowed to bring certain claims against the bankrupt estate, cannot be applied here.

The first, third, and fourth errors assigned are too general to require or permit any special consideration of them. We therefore confine our attention to the second, which is:

"That the court erred in not sustaining the objections filed to the discharge of said Willis V. Bell, as shown by the record."

The character of these objections is such that it is more convenient to take them up without regard to the order in which they stand as they were presented. The last (which was filed subsequently to the others, and on what date it does not appear) we think is fully disposed of by a sentence or two in the testimony given before the referee by the appellants Sellers and Jones. Sellers says:

"Mr. Bell never offered me at any time anything not to oppose his discharge." Jones says: "I have had no conversation with W. V. Bell since he went into bankruptcy. He never made me any offer or offered any inducement not to oppose his discharge in bankruptcy."

The eleventh objection is not only not proved, but is clearly disproved by all the testimony in the case. It is to the effect that Bell had paid D. M. Snow & Co. in full, or compromised that claim and settled it in full before he filed his petition in this case. This is not only not sustained by the evidence, but is clearly disproved. The remaining part of this objection, as stated, is embraced in objection 10, which is to the effect that the firm of D. M. Snow & Co., which firm appears in Schedule A as a creditor, was not a creditor at the time the petition to be declared a bankrupt was filed. The proof on this subject abundantly shows, and the fact is not disputed by the appellants, that at the time of the failure of the appellee in business the firm of D. M. Snow & Co. was a creditor of his, and sued its debt against him to judgment, and it now appears (like the 20 others shown in the schedule) in the record books of the court rendering the judgment. The proof indicates that the part of Schedule A which gives the list of the judgment creditors was prepared from data obtained in the court house. It appears that the books and records of the courts were, and for some years had been, those from which this bankrupt's true condition might best be ascertained. It does appear from the testimony that, at some time subsequent to the rendition of this judgment, another one of the creditors of the bankrupt (his chief creditor) had purchased (not on the bankrupt's account) this judgment of D. M. Snow & Co. It further appears that the bankrupt had such information with regard to this purchase as gave him every reason to believe—in popular language, to know—that the purchase had been made. He had legal personal knowledge of the fact that that firm had extended credit to him, that he had not paid them, and that they had recovered judgment against him. His Schedule A showed that the residence of this firm was Montgomery, Ala.,—the place where the appellant firm resides and does business. The referee rightly refrained from causing to be made any amendment of the schedules to meet the suggestions of the proof on which this ob-

Digitized by Google

jection is based, and the judge of the court of bankruptcy did not err in refusing to sustain it.

The ninth objection had better be considered in connection with the first seven.

The eighth has been sufficiently noticed in what was said earlier in this opinion, showing that the second statutory ground for refusing a discharge in bankruptcy has no application to this case.

The other objections, redacted and put in different order and in working form, are: (1) That the bankrupt did not include in the schedule of his property the sum of $50 which he borrowed from Freeman Rushton; (2) that the schedule did not make particular mention of a gold watch which he owned at the time his petition was filed; (3) that he did not include in the schedule of his property a debt of about $600 which his wife owed him; (4) that when he made the affidavit stating that he "is without, and cannot obtain, the money with which to pay" the filing fees he made a false oath in relation to this proceeding in bankruptcy.

We appreciate the gracious forbearance which constrained the appellants to resist the temptation to accompany the first of the objections just above noted with the equally patent, and not less valid, one, "that the list of creditors filed by said Bell is willfully and knowingly incorrect and false in this: that it does not include the name of Freeman Rushton, of Montgomery, Alabama, from whom the said Bell borrowed $50, just before presenting his petition, to be adjudged a voluntary bankrupt." It taxes judicial gravity to consider seriously this objection. The bankrupt law provides that the court shall order the trustee to pay all taxes, national, state, and municipal. These charges occupy a position above classification. It is provided:

"The debts to have priority except as herein provided, and to be paid in full out of bankrupt's estate, and the order of payment shall be (1) actual and necessary cost of preserving the estate subsequent to the filing of the petition; (2) the filing fees paid by creditors in involuntary cases; (3) the cost of administration, including * * * one reasonable attorney's fee, for the professional services actually rendered * * * to the bankrupt in voluntary cases, as the court may allow."

It is to be observed that in ordinary cases, whether in involuntary or in voluntary bankruptcy, the actual and necessary cost of preserving the estate subsequent to the filing of the petition and up to the qualification of the trustee will usually, and always should where he is exercising good faith, devolve upon the bankrupt himself, not at his charge and expense, but as a charge of the first rank against the estate which he is required or has volunteered to surrender. The charge of the second rank is the filing fees paid by creditors in involuntary cases. The reason for restricting this to fees paid by creditors in involuntary cases is obvious, because where such fees are paid in voluntary cases they may be paid by the bankrupt himself out of the estate which he has to surrender, and therefore no account need be taken of them. The charge next in rank and to be paid in full out of the bankrupt estate is the cost of administration, including a reasonable attorney's fee, such as the court may allow for services actually rendered to the bankrupt in voluntary cases. This clearly shows that, where there is no surrenderable estate in the bankrupt's

Digitized by Google

hands out of which he could pay either in money or in property a reasonable attorney's fee, and therefore has to obtain credit therefor either from the attorney or from some other person, the reasonable value of the services actually rendered becomes a charge in favor of the bankrupt or of the attorney on all of the bankrupt estate equally with the other costs of administration. This view is in harmony with, and strongly supported by, the provision that a debtor may, in contemplation of the filing of a petition to be adjudged a bankrupt, pay money or transfer property to an attorney to a reasonable amount, to be judged of by the court, for services to be rendered in the bankruptcy proceedings. In case the payment so made shall in the judgment of the court exceed a reasonable fee, the excess may be recovered by the trustee for the benefit of the estate. Section 60d. In the case we are considering the schedules and the testimony show that there is no estate in bankruptcy, unless the property which the law of the defendant's domicile exempts from levy and sale under judicial process from the payment of debts constitutes a part of the estate in bankruptcy. All of the evidence conduces to show and constrains us to conclude that, since the fall of 1894, the appellee has had no property which is not exempt from levy and sale under judicial process for the payment of debts by the terms of the constitution and statutes fixing such exemptions in the state of Alabama. What effect the waiver evidenced by the judgment in the case of Sellers & Orum may have will be discussed further on in this opinion. If the $50 borrowed from Rushton at the time of preparing the petition and exhibits presented to the court to be declared a voluntary bankrupt became a part of the estate in bankruptcy as soon as it passed from Rushton's hand into the hand of the bankrupt on its way to the attorneys, the payment of it to the attorneys for their fee and to meet the cost of giving notice to the creditors, if the fee and cost charges were reasonable, was a valid disposition of that much of the estate. It is objected that the schedule did not make particular mention of a gold watch worth $50, which the bankrupt owned at the time his petition was filed. In his examination before the referee on October 5th the appellee said that in the item "personal wearing apparel" in Schedule B he included the watch which he habitually wore; that, exclusive of the watch, his personal wearing apparel did not exceed in value $25. He claims his personal wearing apparel, including the watch, as exempt property, under section 2037 of the Alabama Code, which provides that the personal property of a resident of that state to the amount of $1,000 in value, to be selected by him, and, in addition thereto, all necessary and proper wearing apparel for himself and family, and all family portraits or pictures, and all books used in the family, shall also be exempt from levy and sale under execution or other process for the collection of debts contracted after the 23d day of April, 1873. The Code of Alabama provides:

"The words 'personal property' include money, goods, chattels, things in action and evidences of debt, deeds, and conveyances." Chapter 1, § 2.

It has been repeatedly and uniformly decided by the supreme court of Alabama that the exemption laws are founded in a spirit of humanity and benevolence, and are to be liberally construed, and that

Digitized by Google

such a rule of construction requires them to attach to the phrase "personal property," as used in those laws, a signification so comprehensive as to embrace everything which is the subject of ownership, not being realty or an interest in realty. Enzor v. Hurt, 76 Ala. 595. In a general sense and within comprehensive signification attached to the phrase "personal property," as used in the Alabama exemption laws by the supreme court in the case just cited, that phrase includes wearing apparel. It is clear, however, that section 2037 draws some distinction between personal property and the necessary wearing apparel, family portraits, or pictures and books used in the family. We have not found in the statutes of Alabama or in the decisions of the supreme court of that state a definition of the phrase "wearing apparel," as it is used in this section. The only limitation which the section puts upon the meaning of the words is that the apparel shall be necessary and proper for the wearer or his family. This includes what is merely proper, as well as what is necessary. And, subject to this qualification alone, there is no limitation put on the quantity, quality, or value of the property which the words used describe. The nature of the case, the reasonable average conditions of life, will sufficiently restrict the amount in quantity and value of articles kept by insolvent debtors to be worn on their persons. The homestead exemption is limited in Alabama both in value and in area. Personal property, as distinguished from wearing apparel, family portraits, or pictures and books used in the family, is exempt to the value of $1,000. This is not restricted to designated articles. The right to select the property protected from seizure and sale for debt at any time before or after the levy of process and before actual sale is secured by the constitution beyond the power of the legislature to abridge it. It is fully recognized by the Code:

"Any person by an instrument in writing may waive his right to an exemption in any property exempt from levy and sale under execution or other process." Section 2104.

As to personal property, the waiver may be made by a separate instrument in writing, subscribed by the party making the same, or it may be included in any bond, bill of exchange, promissory note, or other written contract executed by him. Section 2105. That "a waiver of exemptions as to personal property" written in a promissory note will subject wearing apparel to levy and sale under execution is by no means clear. As was said in Enzor v. Hurt, supra, the exemption laws are founded in a spirit of humanity and benevolence, and should be, and uniformly have been, liberally construed. We have not found it said or suggested in the opinions of the supreme court of Alabama that the provision for waiving exemption as to personal property made by section 2105 should receive like liberal construction. It would seem to be the better view that, as the waiver operates as an exception to the general rule, as such exception it should be construed strictly,—not so strictly as to destroy or diminish the force of the exception, but so as not to extend "a waiver of exemption as to personal property" to wearing apparel. The question whether a watch of reasonable value, habitually worn by a debtor, is a part of his wearing apparel, within the meaning of those terms as used in

Digitized by Google

exemption statutes, has been considered by the courts of several of the states, and answered affirmatively or negatively by them, according to the general scope of their respective exemption laws and the particular circumstances of the case in which the claim to the exemption was made. 29 Am. & Eng. Enc. Law, pp. 39, 40, notes. The phrase "wearing apparel," as used in exemption laws, has its popular sense, and includes all the articles of dress generally worn by persons in the calling and condition of life and in the locality of the residence of the person claiming the exemption. It includes whatever is necessary to a decent appearance and to protection against exposure to the changes of weather, and also what is reasonably proper and customary in the way of ornament. A plain gold watch worth not more than $50 is not usually worn habitually by farmers and country merchants as an ornament; but in this day, when everything moves on schedule time, a watch is an eminently useful, if not an absolutely necessary, article of dress. We conclude that where, as in Alabama, the exemption laws embrace the homestead of every citizen, and such personal property as he may have to the extent in value of $1,000, "and, in addition thereto, all necessary and proper wearing apparel for himself and family," a fair construction of this last provision will include within the meaning thereof the watch worn by the appellee. Under different statutes in other states than Alabama, the decisions are conflicting.

It is further objected that the appellee did not include in the schedule of his property a debt of about $600 which his wife owed him. For "a long time" the appellee was engaged in the mercantile and the planting business, carried on in connection with each other, in the country, in the manner that such associated business is conducted in the cotton-growing states. He had sons who sometimes wore the gold watch which he usually wore. In 1890 he married the wife referred to in this objection. At the time of their marriage she owned several lots in the town of Ramer, in Montgomery county, and a small farm near that town, from which property she has been getting an annual rent of about $200. She seems to have had also $400 or $500 in money. The year after their marriage she bought a farm from Webster for the price of $1,400, of which she paid $500 in cash, and the balance in the fall of that year. The rent of this farm for that year was not included in her purchase. For the subsequent years this place brought her an annual income of from $250 to $350. Some time in the summer or early fall she got a small amount of money from her husband to pay on this purchase, and, at the time of making the last payment, in the fall of 1891, he let her have about $500. The number and character of his creditors and the amount in face value of credits extended to him show that he had enjoyed good standing as a business man for some time previous to his failure, in the fall of 1894. It is matter of common knowledge that in 1891 cotton, the chief staple farm product grown in the state of Alabama, brought in the market a good price. It was at this time that the appellee let his wife have the money. From all that the record shows we must conclude that, if at that time he had given her this money outright, the appellants could not then have complained or

Digitized by Google

now complain. After this transaction with his wife the appellee gave one of these appellants a note containing "a waiver of exemptions as to personal property." This waiver created no lien on any property. Craft v. Stoutz, 95 Ala. 245, 10 South. 647. The note was not put in judgment until March 3, 1898. On October 5th (if never before) the appellants obtained full knowledge of these transactions had between the appellee and his wife in 1891. The appellee took no note for the money and made no entry on any book, and made no other memorandum of it. He says that he did not and does not keep any books between himself and his wife; that he never asked her to pay it back to him; that one might say she owes it; that she really owes it, but that he does not exact it of her. If, in fact, this transaction created the relation of debtor and creditor between the appellee and his wife, and the debt is still subsisting, though not renewed by any subsequent promise, and payment of it has never been demanded, and is not now exacted, and by the force of the waiver it is, under the laws of Alabama, subject to seizure by garnishment or other process to satisfy the appellants' judgment, there is nothing in the pending proceedings in bankruptcy to obstruct the use of such process from the state court. Giving the waiver the full effect claimed for it by the appellants, it would vest the right to this chose in action in the trustee, not as a part of the estate in bankruptcy for the benefit of creditors generally, but for the benefit of this one creditor to the exclusion of a great number of creditors whose debts aggregate nearly 100 times as much as his. Conceding that this alleged debt exists, it is a part of the personal property of the bankrupt, which has not been reduced to his possession, and he has no material part of it or evidence of it, or other thing in connection with it, which he can voluntarily surrender or be made to surrender by a summary rule against him. If the right to it has vested in the trustee, unless the wife voluntarily pays it or consents to submit herself to the jurisdiction of the court of bankruptcy, it can be recovered by the trustee, if at all, only by legal proceedings in the state court substantially identical with the proceeding which the appellants could have used had no adjudication in bankruptcy been had, and which, in our opinion, they still have the same right to use that they would have, if the bankruptcy proceedings were not pending. "All property of the wife held by her previous to the marriage, or to which she may become entitled after the marriage in any manner, is the separate property of the wife and is not subject to the liabilities of the husband." Section 2520. "The earnings of the wife are her separate property." Section 2521. "The wife has full legal capacity to contract as if she were sole, except as otherwise provided by law." Section 2526. "The husband and wife may contract with each other, but all contracts into which they enter are subject to the rules of law as to contracts by and between persons standing in confidential relations; but the wife shall not, directly or indirectly, become the surety for the husband." Code Ala. c. 60, § 2329. There was no proof offered tending to show that the wife had or claimed any other property than that disclosed by the bankrupt in his testimony before the referee, or that the property she owned had been acquired in any other manner

Digitized by Google

than that shown by him. All of the items embraced in the foregoing objections amount in value to only $700. Personal property, as distinguished from wearing apparel, family paintings or pictures, and books used in the family, and in addition thereto, is exempt under the law of Alabama, as we have seen, to an extent beyond the amount of these three items. The act of bankruptcy does not affect the allowance to bankrupts of the exemptions which are prescribed by the state law. Bankruptcy Act, § 6. The courts of bankruptcy have jurisdiction to determine all claims of bankrupts to their exemptions. Section 2 (11). It is the duty of trustees to set apart the bankrupt's exemptions, and to report the items and estimated value thereof to the court as soon as practicable after their appointment. Section 47 (11). Exempt property is excepted from that the bankrupt's title to which is vested by operation of law in the trustee. Section 70a. On this subject Collier, in his work on Bankruptcy, says:

"A court of bankruptcy has no jurisdiction over exempt property other than to hear and determine the claims of the bankrupt, if disputed. It may restrain its own officials from interfering with it; but that is a jurisdiction over them, not over the property. It will not give any aid to the bankrupt in enforcing his rights as to the exempt property beyond preventing the trustee from interfering with it. To the state courts is left the decision of all questions that may arise between parties as to such property. The bankruptcy court cannot properly entertain a proceeding to enforce a lien upon such property." Coll. Bankr. pp. 74, 75.

There is lurking through all the record made in this case by the appellants from their first appearance before the referee an implied suggestion that much of the property now nominally owned and held by the appellee's wife and by the appellee's brother, N. J. Bell, is in fact the property of the appellee. It is now more than four years since the appellee's failure in business and the transfer of his assets real and personal to his brother, N. J. Bell. The bankrupt law does not open any door for inquiry into such transactions as occurred before the passage of the act, or into such transactions occurring after the passage of the act, but more than four months before the beginning of proceedings in bankruptcy. Moreover, it appears that these parties and the appellants reside in the same county; that the wife and the brother have real estate more than sufficient to satisfy the claims of the appellants; and, if the wife and the brother have been and continue to be parties to the fraudulent concealment of the appellee's property, there exists in the state of Alabama a court of chancery clothed with power to search the conscience of each of these parties and strip the veil from their simulated dealings, and make discovery of the property of the appellee, if he has any in the hands of these near kindred. Code Ala. §§ 819, 822.

The only objection remaining to be considered is that the appellee willfully and knowingly swore falsely when he stated in the affidavit which accompanied his petition that he was without, and could not obtain, the money with which to pay the fees of the clerk, referee, and trustee. Another statute of the United States provides that any citizen entitled to commence any suit or action in any court of the United States may commence and prosecute to conclusion the same without being required to prepay fees or give security therefor before

Digitized by Google

or after bringing the suit or action, upon filing in the court a statement under oath, in writing, that, because of his poverty, he is unable to pay the costs of the suit or action which he is about to commence, or to give security for the same, and that he believes he is entitled to the redress he seeks by such suit or action; setting forth briefly the nature of his alleged cause of action. 27 Stat. 252. The bankruptcy act provides that any person who owes debts, except a corporation, shall be entitled to the benefits of this act as a voluntary bankrupt. Section 4. In each of the sections referring to the fees of the referee, trustee, and clerk, required to be paid in bankruptcy proceedings at the time of the filing of the petition, there is a reservation made by the insertion of these words: "Except when a fee is not required from a voluntary bankrupt." Sections 40, 48, 52. It is made the duty of the clerk to collect the fee of the clerk, referee, and trustee in each case instituted before filing the petition, except the petition of a proposed voluntary bankrupt which is accompanied by an affidavit stating that the petitioner is without, and cannot obtain, the money with which to pay such fees. Section 51. The general orders in bankruptcy, which have the force of statutes, provide:

"In any case in which the fees of the clerk, referee, and trustee are not required by the act to be paid by a debtor before filing his petition to be adjudged a bankrupt, the judge, at any time during the pendency of the proceedings in bankruptcy, may order those fees to be paid out of the estate; or may, after notice to the bankrupt, and satisfactory proof that he then has, or can obtain, the money with which to pay those fees, order him to pay them within a time specified, and, if he fails to do so, may order his petition to be dismissed." Gen. Order 35, par. 4 (32 C. C. A. xxxiv., 89 Fed. xiv.).

"Before incurring any expense in publishing or mailing notices, or in traveling, or in procuring the attendance of witnesses, or in perpetuating testimony, the clerk, marshal, or referee may require, from the bankrupt or other person in whose behalf the duty is to be performed, indemnity for such expense. Money advanced for this purpose by the bankrupt or other person shall be repaid him out of the estate as part of the costs of administering the same." Gen. Order 10 (32 C. C. A. xiii., 89 Fed. vi.).

The evident intent and spirit of the general law which secures all citizens entitled to bring any suit or action in the courts of the United States, the right to commence and prosecute the same, though they have not the means to pay or secure the costs, and the careful mention, four times repeated in the bankruptcy act, that the prepayment of fees is not required from a debtor who is without, and cannot obtain, the money with which to pay the same before filing his petition to be adjudicated a voluntary bankrupt, show that this class of litigants is not viewed with disfavor by the laws of this country. The last paragraph but one of the present law shows that petitions for voluntary bankruptcy are not disfavored. On the contrary, they might be filed after the expiration of one month from the passage of the act, while no petition for involuntary bankruptcy was permitted to be filed within four months of the passage thereof. In cases of voluntary bankruptcy, a schedule showing all of the property of the petitioner must accompany the petition. Upon the filing thereof, the right of the petitioner to sell or charge any part of the property em

Digitized by Google

braced therein, and not excepted from that the title to which will be vested as of the date of the adjudication of bankruptcy in the trustee when appointed and qualified, immediately ceases. Although the courts may appoint receivers, or the marshal upon application of parties in interest, when absolutely necessary for the preservation of estates to take charge of the property of bankrupts after the filing of the petition and until it is dismissed or the trustee is qualified, it is the duty of the bankrupt himself in involuntary cases, and much more in voluntary cases, to keep careful charge of and preserve all the property which, upon his being adjudged a bankrupt, will vest, by operation of law, in the trustee as soon as one shall be appointed and qualified. The actual and necessary cost, if any, of preserving this property subsequent to the filing of the petition, by whomsoever it is expended, is to be paid in full out of the estate first after the payment of taxes. There is no indication in the act that the petitioner in voluntary cases may not after filing his petition, and before obtaining his discharge, earn, according to his ability, a living for himself and family, or that he may not use all of his earnings as he may himself elect for that purpose, or that he shall in any manner account to the court for the same. Neither is there any indication in the law that any of the expenses of the bankruptcy proceedings are to be a charge on the property which, by the law of the bankrupt's domicile, is exempt from forced sale for the collection of debts, and on that account excepted from the bankruptcy estate by section 6 of the act. The whole purview of the act is opposed to the thought that the fees of the clerk, referee, and trustee are made, or in any event are to become, a charge upon the personal earnings of the bankrupt accruing after he is adjudged to be a bankrupt, or a charge on the exempt property, which is not in any case to be affected by the bankruptcy act. Its whole character is infinitely removed from that of our former laws, which used physical duress by incarceration as a means by which the debtor, or his friends through sympathy for him, were coerced into paying the debt, and he was punished for owing it. Though this evil spirit has been fully exorcised from the whole body of our national law and from the laws of Alabama, the idea or sentiment out of which it sprang and in accordance with which it was administered still lingers in the minds of some of our citizens. All such processes for collecting debts are forbidden by the constitution of Alabama. Ex parte Hardy, 68 Ala. 303.

The record in this case shows that the clerk of the court of bankruptcy where this proceeding is pending was examined before the referee, and was asked by the counsel for the appellee:

"Q. Was there what is known as the 'inability oath' made in this case? A. There was. Q. Do you know, as a matter of information connected with your office, that the judge of this district, as well as judges in other districts, have stated judicially that they would refuse to allow a discharge in bankruptcy to a man who has taken that oath? A. I do not understand clearly about this proposition. I have not looked into the question very closely. Once I heard some discussion about the question in a vague, hazy way. We have discharged one man who has made that oath without paying his fees."

Digitized by Google

We find in a text-book, from which we have received much assistance in our effort to construe the provisions of the bankruptcy act, this paragraph:

"In various districts, we are informed, rules have been promulgated which tend to expedite the cases in which the fees have been paid in preference to those which are prosecuted in forma pauperis. We believe it may be safely asserted that a bankrupt, by paying the small fees imposed by the law, not only will be paying a debt morally as well as legally due,—the payment of which any person, however insolvent he may be, can accomplish by borrowing from his friends,—but he will undoubtedly find that, by paying such fees, he will be advancing his own interests." Coll. Bankr. p. 570.

If these ideas are to find permanent lodgment in the minds of the judges of the courts of bankruptcy and become active, the carefully expressed provisions of the bankruptcy act granting the right to insolvent debtors to present their petition for relief in some cases in forma pauperis will not only be denied, but this humane and benevolent bounty from the government will be tortured into a most malignant snare. It is manifest that paragraph 4 of general order 35 relates only to cases in voluntary bankruptcy, and the language shows that there may be such cases in which the petitioning debtor is not required to pay the fees of the clerk, referee, and trustee before or at the time of filing his petition, although he presents a schedule of property in excess of the exemptions allowed by the law of the state of his domicile and surrenders an estate in bankruptcy. Otherwise, it would be futile to provide that "the judge at any time during the pendency of the proceedings in bankruptcy may order those fees to be paid out of the estate." The terms of the affidavit, as prescribed by section 52, are "that he is without, and cannot obtain, the money with which to pay such fees." This affidavit may well be made in cases in which there is an estate to be surrendered, consisting not in money or in property that has a market value or can be converted into money by the petitioning debtor without substantial sacrifice of its value, and from which, therefore, he could not obtain the money in the exercise of perfect good faith towards the court and his creditors. Upon the presentation of his petition and schedules, accompanied by the affidavit in the terms of the statute, the clerk has no option as to filing the petition and taking the action thereon prescribed by the law. The judge of the court of bankruptcy, on the motion of parties interested, or on his own motion, after notice to the bankrupt, may have satisfactory proof that the bankrupt has not made a full surrender of his assets, and that he then has, or can obtain, the money with which to pay those fees. There is nothing in this paragraph 4 in the nature of an amendment of the bankruptcy act or out of line with our construction of its provisions. It does not require the petitioning debtor to use, sell, or pledge his exempt property, for that would be repugnant to section 6, Bankruptcy Act. It does not require that he should apply to his kindred or friends to furnish him the money, at the peril of being charged with and convicted of making a false oath should he tender the statutory affidavit, and having his prayer for a discharge refused on that ground, or having it indefinitely delayed on that account, for this would be a

Digitized by Google

refinement on our former laws prescribing imprisonment for debt. It does not impose any humiliation on a citizen to accept the bounty of the government in providing that he may obtain the benefit of the act without the prepayment of any fees; but it would inflict a humiliation on any citizen to require that he solicit or accept alms of his kindred or friends. The judgment of the court of bankruptcy granting the appellee his discharge is affirmed.

(94 Fed. 871.)

LAFOURCHE PACKET CO. v. HENDERSON.

(Circuit Court of Appeals, Fifth Circuit. May 23, 1899.)

No. 810.

1. APPEALS IN ADMIRALTY—ASSIGNMENTS OF ERROR.
   An assignment "that the court erred in holding that libelant was entitled to any compensation for the injuries received" by him is too general.
2. SHIPPING—INJURIES TO SEAMEN—LIABILITY OF SHIP.
   It seems that, under the general admiralty practice, a seaman injured through the use of defective appliances furnished by the owners of the ship may proceed against the ship for damages.
3. SAME—NEGLIGENCE—DEFECTIVE APPLIANCES.
   Where a skid used to stow barrels into the hold was broken on a prior voyage, to the knowledge of the ship's officers, so that, through the sagging of one side of it, a bolt worked up and caught a barrel being sent down, and threw it off and against a seaman engaged in the work, the ship was liable for the injuries inflicted.
4. SAME—ASSUMPTION OF RISK.
   A seaman does not assume the risk involved in the use, under orders, of patently defective appliances furnished him by the master.
5. SAME—DAMAGES—EXCESSIVENESS.
   Where both bones of the leg of a seaman were broken through negligence, and after the injury he was grossly neglected by the officers of the ship, and the injury was permanent and greatly damaged him in his earning capacity, damages of $2,000 were not excessive.

Appeal from the District Court of the United States for the Eastern District of Louisiana.

On or about March 8, 1898, William Henderson, appellee, was shipped at New Orleans, La., as a seaman in the service of the steamboat Lafourche, for a voyage to Thibodaux, La., in Bayou Lafourche, and return to New Orleans, at the wages of $80 per month and found. The boat made the outward trip with libelant in the service thereof. On the return trip, and while said vessel was lying at a plantation on Bayou Lafourche, the said Henderson, with others of the crew, was duly ordered to go into the hold or hull of said steamboat to aid and assist in storing cargo. Accordingly he proceeded to the place or part of said hull or hold designated, and proceeded in the discharge of the duties required of him. While so occupied, and while cargo was being taken on board and stowed in the hull of said vessel, said Henderson was required by the proper officers of said vessel, and the duty assigned him, to stand by the lower end of the skid leading from the main deck down to the floor in the hull, so that, as barrels of sugar skated or "skidded" into the hold of said boat from the main deck would arrive at a point near, he could "cut" (turn) them around, for others of the crew engaged thereabout to roll them to the afterpart of the hull for storage. While said Henderson was performing the duties above mentioned, a barrel of sugar was placed on the skid and started on its way down. After this barrel had gotten about halfway down, and while traveling with great

Digitized by Google

velocity, it turned around, and, instead of continuing down the skid, it rapidly rolled off over the side; and, before libelant could escape, his left leg was caught by the barrel against a stanchion, and both bones of the leg were broken. To the knowledge of the officers of said steamboat, acquired on a prior trip, one side of the skid was weak, one hook broken off, and the iron facing of the runner broken. After sustaining the injury complained of, libelant was carried up out of the hull, taken aft, and placed on some freight. A doctor came on board and professed to set the broken limb, which was then bandaged; and libelant was laid on some stuff spread on the boat's deck, made to answer the purpose of a mattress. Appellant was injured about 4 or 5 o'clock Wednesday afternoon, and from that time until Thursday night he was left on the boat's deck, as above mentioned. When the crew was paid off, his wages were sent down to him. After the trip was concluded, the crew soon left the boat, except libelant who was permitted to lie on the boat's deck in his helpless condition. Some hours after the arrival of the vessel in port, a harbor police officer came on board, and found appellee lying in a helpless condition on deck, ascertained from him the nature of his injury, and sent for the Charity wagon, which in due time arrived, and took appellee to the Charity Hospital. All these facts are undisputed. The opinion of the court deals with controverted matters. Because of the injuries sustained, the loss of wages, and the impaired capacity to earn wages, the physical pain, and the neglect of appellee after he was injured, he brought this libel in rem to recover the sum of $3,000. After a hearing of the case, and after a personal inspection of the skid causing appellee's injuries, the court rendered a decree in favor of the libelant for the sum of $2,000. On this appeal, the following are the assigned errors: "(1) That the court erred in holding that libelant was entitled to any compensation for the injuries received; (2) that the injuries complained of in the said libel were not caused by any fault or negligence on the part of the claimant, or any person for whom claimant was responsible; (3) that the defect, if existing at all, was a patent defect, and the risk assumed was one of the assumed risks of the employment, and was known to libelant; (4) that, even if libelant was entitled to any allowance whatever, the allowance granted herein is excessive."

Hewes T. Gurley, for appellant.
John D. Grace and A. B. Phillips, for appellee.

Before PARDEE, McCORMICK, and SHELBY, Circuit Judges.

After stating the facts, the opinion of the court was delivered by PARDEE, Circuit Judge.

The first assignment of error is too general to warrant attention, but it is the only one to cover the point sought to be raised,—that, while the district court, sitting in admiralty, had jurisdiction of the demand, yet the libelant had no right to proceed in rem, because he had no maritime lien on the ship, nor any lien under the domestic law for damages resulting from his personal injuries, as set forth in the libel. In the district and circuit courts in this circuit, it has never been seriously disputed that, under the general admiralty practice, a seaman who is injured through the use of defective appliances furnished by the owners of the ship has a right to proceed against the ship to recover his damages. Several cases of the kind have been brought to this circuit court of appeals since its organization, and the jurisdiction to proceed in rem has been taken for granted. The Whisper, 2 U. S. App. 618, 4 C. C. A. 654, and 54 Fed. 896; Johnston v. Johansen, 30 C. C. A. 675, 86 Fed. 886. The right of other persons than regular seamen, employed on a ship, to proceed in rem to recover damages for personal injuries, has been tacitly recognized in all the courts of the United States, and has been affirmatively

Digitized by Google

recognized in The Christobal Colon, 44 Fed. 803, decided in the Eastern district of Louisiana; and there may be other cases to the same effect. We know of none to the contrary. The precise question now presented is not necessarily raised on this appeal, because the domestic law gives the libelant a lien and privilege. The Lafourche was owned in Louisiana, and was running from New Orleans to various places through Louisiana waters; and the injuries complained of were suffered on Bayou Lafourche, in the state of Louisiana. Article 3237 of the Louisiana Revised Civil Code provides as follows:

"The following debts are privileged on the price of ships and other vessels, in the order in which they are placed: * * * (12) Where any loss or damage has been caused to the person or property of any individual by any carelessness, neglect or want of skill in the direction or management of any steamboat, barge, flatboat, water craft or raft, the party injured shall have a privilege to rank after the privileges above specified. * * *"

The second assignment raises the question whether the injuries to the libelant were caused by any negligence or fault on the part of the ship. As recited in the statement of facts, it is undisputed that the libelant received his injuries while in the line of his duty, and while using with his fellow servants a broken skid, and that the skid so used had for some time been broken, on or before a prior voyage, and its condition was known to the officers of the ship. The evidence of the libelant and his witnesses is to the effect that, through the sagging of one side of the skid on which side the hook was broken, a bolt worked up about the middle or belly of the skid, which caught the barrel then being sent down into the hold, cut one of the hoops, and otherwise threw it off the skid, resulting in the libelant's injury. John Williams, the witness who testified the clearest on this point, was the man who placed the barrels upon the skid, starting them down the hold. His evidence is so pointed that we extract as follows:

"Q. Do you know what the cause was of that barrel twisting around on that skid? A. When the barrel twisted around on the skid, and this man hollered, I went down in the hold to assist him; and when I went down in the hold to assist him I looked on the side of the skid, and I saw there was a bolt just about that high up,—that had risen up about an inch,—and the hoop of the barrel had struck it, and the hoop was cut plumb in two. Q. Was it proper for that bolt to be extending up over and above the side of the skid? A. No, sir. Q. What was the cause of the bolt extending up that way? A. The skid was broken one side. It had only one prong, whereas it should have had two. One was broke, and they were fixing the skid with a block,—working the skid with a block. It was put underneath the skid, and it would slip out, and that would make this bolt work up. Q. Whose duty was it to pay attention to those blocks? A. Most any that was in the hold. Q. What blocks were they? A. They were little, short blocks, put under the skid to keep it from sliding up. Q. Pieces of 'plunder,' they call it on the boat? A. Yes, sir. Q. You say this bolt had worked up through there? A. Yes, sir. Q. To your mind, was the working up of the bolt the cause of the catching of this barrel and throwing the barrel off? (Objection is urged, being a matter of opinion.) A. Yes, sir. Q. Was there any other thing present, or the skid in any other condition, that could have brought about that result, except the fact that this skid was broken, and blocks put under it? A. The skid was broken on the side, and it was kept propped up with these blocks; and, when these blocks slipped out, it let the skid down, and that would make this bolt jump up. Q. Do you know whether

Digitized by Google

a complaint was made to the carpenter about the condition of that skid? A. Yes, sir; I made it myself. Q. When? A. While the boat was coming down Bayou Lafourche. Q. What did you tell this carpenter? A. I said that the skid ought to be fixed,—it was mighty dangerous,—and he told me it was none of my business. * * * Q. After Henderson got hurt, was any more barrels put down on that side? A. Yes, sir; I went down and shoved the block down underneath the skid, and took a long piece of iron and drove the bolt back; and the next man that took his place, cutting off the barrels, I told him to be particular of that block underneath, and whenever it got loose to let me know, and I would stop the work so that he could put it underneath again. * * * Q. They didn't put anybody down there to look after the blocks, then? A. No, sir. Q. I speak about this block underneath the skid. A. That was his business, but he didn't know it. No one didn't tell him about it. That was his first trip on the boat. He thought the skids were in proper shape. He didn't pay any attention to the blocks at all. Q. No one had warned him about the defective condition of the skid? A. No, sir. * * * Q. You said something awhile ago about a bolt that was in the skid,—about a catching on this hoop of the barrel and cutting it. Where was that bolt? (Objection is urged to this examination, nothing about which has been brought out on the cross-examination.) A. The swagging of the broken part— When the block would slip out, it would swag this way, and make the bolt rise up on the right-hand side. Q. About how far down the skid was this bolt? A. It was about middle ways. Q. Each side of the skid consists of several pieces of wood bolted together.. Now, this bolt was one of the bolts that belonged to the skid? A. It was one of the bolts that held the band on the skid. Q. About how far down? About the belly of the skid? A. About middle ways of the skid. Q. You spoke about the hook being broken. That allowed the skid to swag? A. Yes, sir; and it made the bolt rise up. Q. And that made the bolt down in the belly of the skid work up? A. Yes, sir."

Williams' evidence is corroborated by his fellows, and is not disputed by facts testified to by any of the claimant's witnesses.

The contention of the appellants is that the libelant was injured through the negligence of a fellow servant in placing barrels on the skid, and that the broken hook of the skid cut no figure in the matter. This contention has no support in the evidence, because the persons who were engaged in placing the barrels on the skid directly deny it,—deny that any were improperly placed on the skid,—and there is no evidence whatever to show that the one barrel which injured the libelant was improperly placed upon the skid.

Some argument is made in the brief as to the character of libelant's witnesses, but, from an inspection of the record, we are unable to see that they were any less intelligent or more prejudiced than those witnesses offered by the claimant. The result, to our minds, on all the evidence, is the firm conviction that the libelant received his injuries through the use of the broken skid, which was an insufficient and defective, if not actually dangerous, appliance furnished by the ship.

Under the third assignment of error the appellant contends that if the skid was broken and defective, and the libelant was injured in using the same, still he cannot recover, because the defect was patent, and he knew it, or ought to have known it, from contact with and observation of it, and in continuing to use the same he accepted the risk. The learned counsel, in a very strong brief, supports this contention by the citation of text-books and adjudged cases in the common-law courts,—particularly citing Bailey, Mast. Liab. pp. 198, 199;

Digitized by Google

Way v. Railroad Co., 40 Iowa, 341; Sullivan v. Manufacturing Co., 113 Mass. 398; McGlynn v. Brodie, 31 Cal. 380; Hayden v. Manufacturing Co., 29 Conn. 548; Wormell v. Railroad Co., 79 Me. 405, 10 Atl. 52, in which last-mentioned case it is declared as follows:

"It is the duty of the servant to exercise care to avoid injuries to himself. He is under as great obligation to provide for his own safety from such damages as are known to him, or are discernible by ordinary care on his part, as the master is to provide for him. He must take ordinary care to learn the dangers which are likely to beset him in the service. He must not go blindly to his work where there is danger. He must inform himself. This is the law everywhere."

Without discussing or disputing the law as declared in the authorities mentioned, we are of opinion that it is not applicable to the case in hand. There must be a different rule as to the risks assumed by seamen on board ship from the rule as to the risks assumed by servants and other employés on land.

Curtis on the Rights and Duties of Merchant Seamen (page 11) says:

"The contract of hire for marine service belongs in general to the entire class of contracts for the hire of services, but it also involves, and is governed by, principles peculiar to itself, and which carry it, in very important particulars, beyond the rules applicable merely to contracts of service upon land. Thus, by the common law of England and of this country, when a man lets himself to hire, and neglects or refuses to fulfill his engagement, he cannot be compelled to perform it by any restraint put upon the freedom of his person. The remedy of the other party is solely in the damages he may recover for breach of the contract. The same principle prevails in the civil law ('nemo potest prœcise cogi ad factum'), and the same remedy only is afforded to the injured party. But by the law of most countries the mariner's contract is an exception to this general principle. By the French ordinance, the seaman who fails to render himself on board according to this contract can be pursued and arrested wherever he is found, and constrained to complete his engagement. The same provision for his apprehension and compulsion is made in England and in this country. There is also another peculiarity of this contract, in which it differs from other contracts for the hire of services. It is the only form of service stipulated to be rendered by a freeman of full age, known to the common law, in which the employer, by his own act, can directly inflict a punishment on the employed for neglect of duty or breach of obligation. By the positive law of some countries, also, and perhaps by the general law of the sea, the seamen are bound to assist, at the risk of their lives, in defending the ship against pirates; and a refusal to fight is punished criminally. Such is the law of France and of England. All these peculiarities of the contract are founded in deep reasons of policy and necessity; and, although they do not give a character to this service which takes it out of the general rules and principles applicable to the whole class of contracts for the hire of services, they are important to be stated at the outset, as the prominent features of distinction, reminding us that those general rules and principles will sometimes fall far short of satisfying the exigencies of a contract so strongly marked by principles of its own."

In Robertson v. Baldwin, 165 U. S. 275, 282, 17 Sup. Ct. 329, the supreme court say:

"From the earliest historical period the contract of the sailor has been treated as an exceptional one, and involving to a certain extent the surrender of his personal liberty during the life of the contract. Indeed, the business of navigation could scarcely be carried on without some guaranty, beyond the ordinary civil remedies upon contract, that the sailor will not desert the ship at a critical

Digitized by Google

moment, or leave her at some place where seamen are impossible to be obtained, —as Molloy forcibly expresses it, 'to rot in her neglected brine.' Such desertion might involve a long delay of the vessel while the master is seeking another crew, an abandonment of the voyage, and in some cases the safety of the ship itself. Hence the laws of nearly all maritime nations have made provision for securing the personal attendance of the crew on board, and for their criminal punishment for desertion or absence without leave during the life of the shipping articles."

A seaman aboard ship is bound to perform such services as may be required of him in the line of his employment. He cannot hold back and refuse prompt obedience because he may deem the appliances faulty or unsafe. Masters of ships exercise large powers, and they may legally compel obedience to orders. A seaman necessarily surrenders much of his personal liberty and freedom of action, and he is never at liberty, like the landsman, to quit or make much objection to the circumstances surrounding the work commanded. In Johnson v. Johansen, supra, which was a case in many respects similar to the one in hand, in answer to the same objection as the one now made, this court said:

"It may be, as urged so strongly by the appellant, that the libelant received these appliances and proceeded to use them without objection; but, if this be so, it must be considered that on board ship a sailor is not expected to, nor, as for that matter, permitted, before executing an order, to question the propriety of the order, or the sufficiency of the materials furnished."

The remaining assignment of error is that the damages allowed by the district court are excessive. Considering the very serious injury received by the appellant, in the breaking of both bones in the leg, his physical suffering, and the neglect he received from the hands of the officers of the boat, and the undisputed fact that the libelant is permanently injured, and greatly damaged in his earning capacity, we are not disposed to disturb the amount allowed by the district court. No case is made for the division of damages because of contributory negligence. The decree appealed from is affirmed.

(94 Fed. 876.)

LEARNED et al. v. BROWN et al.

RUMBLE et al. v. SAME.

(Circuit Court of Appeals, Fifth Circuit. May 31, 1899.)

No. 814.

1. MARITIME LIENS—SUPPLIES FURNISHED IN HOME PORT.

Where a vessel is owned by resident citizens of a state, and her headquarters are at a port therein, such place must be treated as her home port, and no lien is given by the general maritime law for supplies furnished at such port, which are presumed to have been furnished on the credit of the owners, and any liens asserted for such supplies must rest upon the laws of the state.[1]

---

[1] As to maritime liens for supplies and services, see note to The George Dumois, 15 C. C. A. 679.

Digitized by Google

2. SAME—UNDER STATUTES OF LOUISIANA—PRESCRIPTION.
Under the statute of Louisiana relating to liens or privileges against vessels (Code 1870, art. 3237), as construed by the courts of the state, a vessel owned in the state, and trading in its waters, is not considered as making voyages, within the meaning of that article, and the privileges granted thereby may be asserted at any time within six months, without regard to the number of trips made by the vessel during that time.[2]

3. SAME—LIEN FOR MONEY ADVANCED.
The statute of Louisiana grants no lien for money advanced to the master or owners of a vessel in the home port, no matter for what purpose.

4. SAME—WAIVER OF LIEN.
Parties who have united in a libel of intervention against a vessel do not waive their right to a lien by withdrawing such libel and filing separate libels.[3]

5. SAME—LIEN BY PART OWNER.
The statute of Louisiana does not authorize a part owner of a vessel to assert a lien against it for wages due him, as against creditors of the vessel

6. SAME—PREMIUMS FOR INSURANCE.
There is no lien on a vessel, either under the general maritime law or under the Code of Louisiana, for premiums due on insurance policies taken for the benefit of the owners, and from which lienholders would receive no benefit in case of loss.

7. ADMIRALTY—FURNITURE OF VESSEL.
Where a dealer in musical instruments placed a piano on a steamer as an advertisement, under a verbal agreement with the captain under which it could be removed at any time, at the option of either party, such piano remained the property of the dealer, and did not become any part of the furniture of the vessel, so as to pass under a mortgage of the vessel and her apparel and furniture; nor did it pass under a sale of the vessel in admiralty as a part of her property, it having been removed by leave of court after her seizure, but before the sale.

Appeal from the District Court of the United States for the Eastern District of Louisiana.

From April, 1898, to the 22d day of September, 1898, the steamboat Liberty, owned by W. P. Aucoin and J. P. McElroy, resident citizens of the state of Louisiana, with headquarters at New Orleans, was running in the Bayou Lafourche trade, making frequent short trips, wholly within the state of Louisiana. On the last-mentioned date she was seized on an admiralty warrant under a libel filed by a seaman for wages. On the 24th day of October, 1898, the Liberty, her tackle, apparel, engines, furniture, etc., were sold under an order of the court, and realized the sum of $2,600. During the time the Liberty was running in the Lafourche trade, her owners incurred many debts on her account, and numerous creditors intervened in the district court, claiming to have advanced money, provisions, supplies, etc., to said steamboat, and asserting, on account thereof, a lien and privilege, under the laws of Louisiana. After much evidence, and a report by the commissioner, the district court made a decree of distribution as follows:

"This cause came on this day for confirmation of the tableau of distribution, filed by the commissioner, in conformity to the decree herein entered, and, no opposition having been made thereto, it is ordered, adjudged, and decreed that said tableau be, and the same is hereby, approved and confirmed,

---

[2] As to maritime liens under state statutes, see note to The Electron, 21 C. C. A. 21.

[3] As to waiver and extinguishment of maritime liens generally, see note to The Nebraska, 17 C. C. A. 102.

Digitized by Google

and that the proceeds herein in the registry of the court be distributed accordingly, to wit:

Gross proceeds deposited in registry		$2,600 00
Amount paid under order of court of October 28, 1898, to marshal for keepers' fees and cost of pumping	$102 50	
Amount paid to mariners under decree of December 10, 1898, for wages	576 46	
		678 96
Balance now in registry		$1,921 04
From which is to be paid:		
Clerk's costs	$ 89 50	
Registrar's fee, $2,600 at 1 per cent	26 00	
Marshal's costs	148 80	
Proctor's docket fee to H. W. Robinson	10 00	
Proctor's dep. fees to H. W. Robinson	75 00	
Commissioner for report and tableau	75 00	
Stenographer	382 60	
		806 90
Balance		$1,114 14
Claims to be paid by preference:		
(1) To J. P. McElroy, wages as clerk	$112 50	
(2) To C. A. Healy, as subrogee	130 00	
		242 50
		$ 871 64

Balance to be distributed pro rata, as follows, to wit:

Names.	To Receive.	
Samuel S. Brown	$463 21	
Samuel S. Brown	12 14	
La. Construction & Imp. Co.	7 55	
M. G. T. Stemple	4 44	
Ins. Co. of North America	23 70	
St. Paul Fire & Marine Ins. Co.	23 70	
Greenwich Ins. Co.	23 70	
Providence Washington Ins. Co.	23 70	
Ins. Co. of North America	14 30	
M. Waller	8 40	
Donaldsonville Fdy. & Mach. Co.	16 90	
J. P. Hogan	7 50	
Salmen Brick & Lumber Co.	20 70	
A. E. Hotard	31 00	
Newman & Spranley Co., Ltd.	19 70	
M. D. Lagan	11 40	
A. S. Daniels	62 95	
Estate Alfred Tufts	17 08	
Paul D'Herete	42 17	
C. W. Ward	3 00	
Geo. Boning	22 50	
John Laskey	4 20	
Wid. A. Ferrandez	3 20	
William Thomson	60	
James Cummings	60	
George Clevis	60	
W. Thomas	60	
Cooley Williams	60	
	$870 14	
W. P. Aucoin for 1 day's witness fee	1 50	
	$871 64	$ 871 64

Digitized by Google

"It is further ordered that the piano claimed by the Medine Music Company, marked 'Schubert No. 19,014,' as per the claim of said company herein, be restored to them, and the bond furnished by it for the release thereof canceled, and the surety thereon released."

From this decree R. F. Learned, S. E. Rumble, and T. V. Wensel, mortgage creditors of the steamboat Liberty, and interveners for remnants, appealed to this court, assigning errors, as follows: "(1) That inasmuch as the steamboat Liberty is owned by residents of the state of Louisiana domiciled in the city of New Orleans, in said state, no lien or privilege attaches to said vessel, or against the proceeds thereof, in favor of domestic material and supply men, for materials, supplies, and money furnished said steamboat, excepting such privilege as is allowed by the statute of said state. Hence the court erred in decreeing in favor of the material and supply men (each and every one of whom is named in the judgment passed in this cause in their respective favor) for and on account of materials, supplies, and money furnished said steamboat on voyage and voyages prior to the last voyage of said steamboat. (2) That the court erred in allowing the claim of Samuel S. Brown for thirty dollars towage and one thousand one hundred and forty dollars for coal supplied, because said services and supplies were rendered and furnished upon the credit of the owners of said steamboat Liberty, and not upon the credit of said vessel, and were not rendered for, or on, or in aid of, the last voyage. (3) That the court erred in allowing judgment in favor of C. A. Healy, because —First, said C. A. Healy did not furnish money under such circumstances or conditions sufficient to create a lien and privilege therefor on said steamboat; second, that no subrogation occurred in favor of said C. A. Healy for and on account of the money paid out by him; third, that said C. A. Healy did not furnish any money for the necessities of said steamboat for, on, or during its last voyage. (4) That the court erred in decreeing in favor of M. D. Lagan, A. S. Daniels, estate of Alfred Tufts, Paul D'Herete, C. W. Ward, George Boning, and John Laskey because—First, said interveners waived their lien and privilege, if any they had, upon said steamboat Liberty, by voluntarily releasing the seizure they caused to be effected in this cause; and, second, because the price of the materials and supplies decreed for in favor of said interveners was not on account of materials and supplies furnished during or for the necessities of the last voyage of said steamboat. (5) That the court erred in decreeing in favor of J. P. McElroy wages as clerk, said J. P. McElroy being a part owner of said steamboat during the time such services were rendered. (6) That the court erred in awarding to the Medine Music Company the piano taken off of said steamboat Liberty under order of court, and erred in entering decree for cancellation of the bond furnished by said company binding themselves to return said piano or the sum of two hundred and fifty dollars (its admitted value), as the court might direct, as said piano was a part of the furniture of said boat, and, if the purchasers of said boat did not acquire the ownership of said piano at the marshal's sale in this case, then these petitioners, together with the other creditors of said vessel, are entitled to said piano, or the value thereof, for payment of their claims and demands against said steamboat. (7) The court erred in decreeing in favor of the following named insurance companies, to wit, Insurance Company of North America, St. Paul Fire & Marine Insurance Company, Greenwich Insurance Company, Providence Washington Insurance Company, Insurance Company of North America, because the insurance written by said respective underwriters was for the sole and exclusive benefit and use of the owners of the steamboat Liberty, and, further, because no lien and privilege exists in favor of said companies, or in favor of any of them, on the said steamboat, or against the proceeds thereof, for or on account of anything. (8) That the court erred in declining to decree in favor of petitioners, appellants herein, who were petitioners for surplus remaining after payment of all liens and claims of prior rank to their mortgage; that, after payment of such liens and claims, a surplus should exist, which was disbursed among interveners, who were and are without lien and privilege on said steamboat Liberty, or the proceeds thereof, and therein the court further erred. (9) That the court erred in decreeing in favor of interveners, who made no due tender or offer of testimony to support their claims; these petitioners, S. E. Rumble and T. V. Wen-

Digitized by Google

sel and Samuel S. Brown, being the only parties before the court who offered testimony to support their respective claims and demands."

S. E. Rumble and T. V. Wenzel, who were the purchasers at the marshal's sale, also appealed, assigning errors as follows: "(1) That the court erred in awarding to the Medine Music Company the piano taken off of said steamboat Liberty under order of court. (2) That the court erred in refusing to award to petitioners the said piano, which was a part of the furniture and apparel and appurtenances of said steamboat Liberty at the time said vessel, together with her furniture, apparel, appurtenances, etc., was purchased by petitioners at marshal's sale, made under order of court in this cause. (3) That the court erred in not dismissing the intervention of the Medine Music Company, because said interveners did not offer evidence to substantiate the allegations of their petition."

John D. Grace, for appellants.
Guy M. Hornor, for appellee Brown.
W. C. McLeod, for appellee Medine Music Co.
J. A. Woodville, for appellees Lagan and others.
J. H. Ferguson, for appellees Insurance Cos.
G. W. Flynn, for appellees Hotard and others.
T. M. Gill, for appellee McElroy.
Richard Peet, for appellee Healey.

Before PARDEE, McCORMICK, and SHELBY, Circuit Judges.

After stating the facts, the opinion of the court was delivered by PARDEE, Circuit Judge.

The owners of the steamboat Liberty being resident citizens of the state of Louisiana, with headquarters at New Orleans, the port of New Orleans must be treated as the home port of the vessel. See The Thomas Fletcher, 24 Fed. 375; The Rapid Transit, 11 Fed. 322. The privileges asserted by the material men involved in this appeal are for supplies and materials furnished in the home port, which, under general maritime law, are presumed to have been furnished upon the credit of the owners, and no maritime lien resulted. The question presented, then, is whether these material men had a lien and privilege under the law of Louisiana. The appellants concede that the statutes of Louisiana grant a privilege, but contend that, as to the material men, the privilege is granted for the last voyage only. As the Liberty was trading within the state, making short and frequent trips from New Orleans to Bayou Lafourche and return, the effect of the appellants' contention, if successful, is that none of the supplies and material furnished are privileged, except those furnished during the last trip; and the practical result would be to deny all credit, under the law of Louisiana, to steamboats owned in Louisiana and trading within the state.

Civ. Code La. 1825, art. 3204, is as follows:

"The following debts are privileged on the price of ships or other vessels, in the order in which they are placed: (1) Legal and other charges, incurred to obtain the sale of a ship or other vessel, and the distribution of the price. (2) Debts for pilotage, wharfage and anchorage. (3) The expenses of keeping the vessel from the time of her entrance into port, until sale, including the wages of persons employed to watch her. (4) The rent of stores, in which the rigging and apparel are deposited. (5) The maintenance of the ship and her tackle and apparatus, since her return into port from her last voyage. (6) The wages of

Digitized by Google

the captain and crew employed on the last voyage. (7) Sums lent to the captain for the necessities of the ship during the last voyage, and reimbursement of the price of merchandise sold by him for the same purpose. (8) Sums due to sellers, those who have furnished materials and workmen employed in the construction, if the vessel has never made a voyage, and those due to creditors for supplies, labor, repairing, victuals, armament and equipment, previous to the departure of the ship, if she has already made a voyage. (9) Money lent on bottomry for refitting, victualling, arming and equipping the vessel before her departure. (10) The premiums due for insurance, made on the vessel, tackle and apparel, and on the armament and equipment of the ship. (11) The amount of damage due to freighters for the failure in delivering goods which they have shipped, or for the reimbursement of damage sustained by the goods through the fault of the captain or crew."

Article 3212 is as follows:

"A ship is considered to have made a voyage when her departure from one port and arrival at another shall have taken place, or when, without having arrived at another, more than sixty days have elapsed between the departure and return to the same port, or when the ship, having departed on a long voyage, has been out more than sixty days without any claim on the part of persons pretending a privilege."

Construing these articles, the courts of the state held that ships trading inland, making short trips on the Mississippi river and its bayous, were not making a "voyage," within the sense of the statute, every time the ship made one of these short trips, but as for such vessels the voyage should be considered a period of 60 days, during which time liens for supplies and materials might be asserted. Shirley v. Fabrique, 15 La. 140; Lee v. Creditors, 2 La. Ann. 599; Scott v. Creditors, 3 La. Ann. 40; Blanchin v. The Fashion, 10 La. Ann. 49; Mooney v. The Hondurino, 11 La. Ann. 538; Van Wickle v. The Belle Gates, 12 La. Ann. 270; Gails v. The Osceola, 14 La. Ann. 544.

This construction as to the term of privileges upon ships, steamboats, and other vessels trading in the inland waters of Louisiana was enforced until 1858, when the following act was passed:

"An act relative to prescription of privileges against ships, steamboats and other vessels, approved March 16, 1858.

"Section 1. Be it enacted," etc., "that from and after the passage of this act the term of prescription of privileges against ships, steamboats, and other vessels, shall be six months.

"Sec. 2. Be it further enacted," etc., "that all laws, or parts of laws conflicting with this act, be and they are hereby repealed."

Since the passage of this act, the uniform jurisprudence in the Louisiana courts, and in the courts of the United States dealing with the same, has been to give the material men a domestic lien or privilege on ships, steamboats, and other vessels owned in the state of Louisiana and trading in the inland waters of Louisiana, for a term of six months. In 1870, when the Civil Code of Louisiana was revised, article 3204 of the Code of 1825, concerning the privileges on ships and merchandise, was revised, becoming article 3237 of the Code of 1870, and the act of 1858 was incorporated therein, as follows: "The term of prescription of privileges against ships, steamboats and other vessels shall be six months." There may be room for argument, under the Code as revised, that the general provision with regard to prescription is controlled by the

Digitized by Google

special provisions contained in some of the articles as to the time when privileges may be asserted; but we think that under the jurisprudence of the state, and following the reason of the case, the proper construction of the article in the Revised Civil Code is that steamboats owned in Louisiana, and trading in the waters of the state, are not making "voyages," within the sense of the article, and the privileges granted by the article on such vessels may be asserted within six months. This disposes of the first assignment of error.

The second assignment is directed against the privilege claimed by Samuel S. Brown for coal furnished the Liberty within four months prior to her seizure; the contention being that, under the evidence in the case, this coal was furnished by Brown upon the personal credit of the owners, and not on the credit of the steamboat. As we read the evidence, Brown did not furnish the coal on the personal credit of the owners, but did furnish it upon the credit of the steamboat.

The third assignment of error is directed against the privilege claimed by C. A. Healy for moneys furnished to the master for the purpose of paying off wages and other claims against the Liberty. The Louisiana Code grants no lien for money advanced to the master or owners of the ship in the home port, no matter for what purpose. "In Grant v. Fiol, 17 La. 158, we held that a creditor for advances or loans in money made to the owner, and applied to the use of a vessel, has no privilege allowed him by law, because he is not subrogated to the rights of those whose privileged claims have been paid out of the money loaned. The claim of the appellants comes within none of the cases provided for by article 3204 of the Civil Code, by which privileges are allowed on the price of ships or other vessels." Hill v. Boat Co., 2 Rob. (La.) 35, 36. "The advance was made to the owner at the vessel's home port, and, under the authority of repeated decisions of our predecessors, conferred no privilege. In the case of Grant v. Fiol, 17 La. 158, the interveners, Sloo & Byrne, claimed a privilege for a sum of money which, they alleged, was loaned by them to the owner of the vessel, and was applied to the payment of the ship carpenter, sailmaker, and crew of the vessel, in order to enable her, by the payment of those claims, to prosecute her intended voyage. It was then held that the expression 'supplies' ('fournitures'), used in the eighth paragraph of article 3204 of the Civil Code, applied to materials sold or furnished to the vessel, not to money or funds advanced. It was also held that the subsequent application of the money by the shipowner to the payment of carpenters, sailmaker, and crew, privileged creditors, did not operate to the lender's benefit; that there was no legal subrogation, and no conventional subrogation was pretended; that privileges were stricti juris, and not to be extended by implication or analogy. The doctrine laid down in Grant v. Fiol was reiterated in the cases of Bank v. The Barque Jane, 19 La. 1, and Hill v. Boat Co., 2 Rob. (La.) 36." Hyde v. Culver, 4 La. Ann. 9, 10. See Wickham v. Levistones, 11 La. Ann. 702. It follows that the lower court erred in decreeing a privilege in favor of Healy.

Digitized by Google

The fourth assignment of error, complaining of the decrees in favor of Lagan, Daniels, and others, because the said interveners waived their lien and privilege, if any they had, upon said steamboat Liberty, by voluntarily releasing the seizure they caused to be effected, is not well taken. The parties united in a common libel of intervention. On objection being made thereto, the libel was withdrawn, and the parties filed individual libels. It is difficult to see how these interveners lost or abandoned any rights or privileges.

The court below decreed in favor of one of the owners of the steamboat, J. P. McElroy, for his wages as clerk. It is difficult to conceive how an owner can have a lien on his own property, and assert the same against the debts which he individually owes. Such a lien was denied in Dowling v. The Reliance, 1 Woods, 284, Fed. Cas. No. 4,042, and Kellum v. Emerson, 2 Curt. 79, 83, Fed. Cas. No. 7,669. The article of the Louisiana Civil Code giving liens on ships contemplates no such result.

We think the court also erred in decreeing in favor of the insurance companies. The insurance written was for the sole and exclusive benefit of the owners of the steamboat, and in no wise inured to the benefit of the ship or maritime lienholders.

In The John T. Moore, 3 Woods, 61, 68, Fed. Cas. No. 7,430, the late Mr. Justice Woods dealt with the question as follows:

"Exception is also taken to the report of the master because he rejected claims of certain insurance companies for premiums on certain policies of insurance taken on the John T. Moore by her owners. I know of no law which gives a lien upon a vessel for the premium for an insurance taken on her by her owners for their own benefit. It is a contract with the owner for his own benefit. It does not aid the vessel. In case of loss, the maritime liens upon the vessel are displaced, and do not follow the insurance money. The money goes to the owner, for his own benefit, and not to the lienholder, who may insure his own interest. Thayer v. Goodale, 4 La. 221; Steele v. Insurance Co., 17 Pa. St. 290; Turner v. Stetts, 28 Ala. 420; White v. Brown, 2 Cush. 412; Stilwell v. Staples, 19 N. Y. 401; Slark v. Broom, 7 La. Ann. 337. The master was right, therefore, in deciding that the claims of the insurance company for premiums were no lien upon the vessel."

The authorities cited are to the effect that lienholders receive no benefit from the insurance, and the learned justice probably considered that paragraph 10, art. 3237, Civ. Code La., referred to and included only premiums due for insurance beneficial to lienholders, freighters, and others relying on the credit of the vessel. The record shows that the insurance companies accepted negotiable notes for the premiums, and each policy shows that the consideration to the insurance company had been received. In such a case, the supreme court of Louisiana denied the privilege. Tiner v. The Bride, 5 La. Ann. 756.

When the steamboat Liberty was seized, September 22, 1898, there was on board a piano, which had been placed there by the Medine Music Company. The boat not having been bonded, on October 12, 1898, a writ of venditioni exponas was issued, and on the same day the Medine Music Company presented its claim to the court for the piano, and asked to be allowed to bond the same, pending the final determination of its rights. This application was granted, and thereupon, on October 20th, and before the steamboat Liberty was sold,

Digitized by Google

the piano was removed from the steamboat. The decree of the district court awards the piano to the Medine Music Company, and directs the cancellation of its bond. This ruling is assigned as error by Learned, Rumble, and Wensel, holders of the mortgage on the steamboat Liberty, and interveners for remnants, and also by Rumble and Wensel, appellants, purchasers of the steamboat at the sale made by the marshal. The facts appear to be as follows:

"The Medine Company made an arrangement—a verbal agreement—with Capt. Aucoin, of the Liberty, whereby it placed a piano on the boat, and took to its store the one then on board. Mr. Medine, in his testimony, says that he made this arrangement as an advertisement for his company, and that it was well understood between him and the captain that the piano he put upon the boat and the one he took therefrom and brought to his store were to be held at the risk of the respective owners thereof; that he could have taken his piano off the boat at any time, and returned the one taken off her, the captain having a like privilege. The Medine store, with the boat's piano stored in it, having been destroyed by fire, it cannot be restored. Capt. Aucoin corroborates Mr. Medine's evidence in a measure. It is in evidence that there was no sign upon the piano to indicate to a third person, or any one visiting the boat, or any creditor, that it was not part of the furniture thereof."

From these facts, it is clear that the Medine Music Company never parted with its ownership of the piano, and the owners of the boat never bought the same. The mortgage never covered the piano, as it never formed a part of the property of the boat, nor constituted any necessary part of her tackle, apparel, or furniture. See 1 Pars. Shipp. & Adm. p. 78, and notes. Besides, the mortgage creditors are before the court intervening for remnants only, and it can hardly be contended in their behalf that the court should go outside, and find remnants for them. As the piano did not belong to the owners of the boat, and was not on the boat at the time it was sold, but had been withdrawn by the order of the court before the sale, and as it constituted no necessary part of the boat's tackle, apparel, or furniture, we are clear that the purchasers of the steamboat acquired no right to, or interest in, the piano in question.

For these reasons the decree of the district court is reversed, and the cause is remanded, with instructions to the district court to dismiss the libels of intervention of J. P. McElroy, C. A. Healy, as subrogee, the Insurance Company of North America, St. Paul Fire & Marine Insurance Company, the Greenwich Insurance Company, and the Providence Washington Insurance Company, with costs, and thereupon distribute the proceeds of the steamboat Liberty remaining in the registry of the court among the intervening libelants, appellees in this case, who have proved their claims as furnishers of supplies to the steamboat Liberty within six months prior to her seizure, the same to be distributed pro rata, if there are not enough funds in the registry to pay in full, and, if any balance be left after paying the material men, to award the same to Learned, Rumble, and Wensel, mortgage creditors of the steamboat Liberty. The costs of this appeal are to be paid, one-half by Rumble and Wensel, appellants, who take nothing by their appeal, and the other half by the intervening libelants, appellees, whose libels are dismissed, to wit, J. P. McElroy, C. A. Healy, the Insurance Company of North America, St. Paul Fire & Marine Insurance Company, Providence Washington Insurance Company, and the Greenwich Insurance Company.

Digitized by Google

(94 Fed. 885.)

THE KENSINGTON.

(Circuit Court of Appeals, Second Circuit. May 25, 1899.)

No. 147.

1. SHIPPING—DESTRUCTION OF PASSENGER'S BAGGAGE—NEGLIGENT STOWAGE.
Libelants were passengers on a transatlantic steamer, and their trunks, constituting their baggage, with those of other passengers, were broken to pieces, and the contents destroyed, during the voyage. The vessel encountered unusually rough weather on the passage, and rolled heavily. A witness for libelants, who entered the compartment where the baggage was stowed immediately on the opening of the hatch at the end of the voyage, testified that he examined carefully, but could find no evidence that the trunks had been lashed or otherwise secured against movement in rough weather, and the compartment was not filled. *Held* that, in the absence of any evidence on the subject from claimants, such testimony was sufficient to support the libelants' contention of negligent stowage.

2. SAME—CONTRACT OF CARRIAGE—PROVISION EXEMPTING CARRIER FROM LIABILITY.
Where both carrier and passengers are citizens of the United States, and the place of completion of the contract of carriage is within this country, a stipulation for exemption from liability in the contract, authorized by the law of a foreign country, by which the contract is by its terms to be governed, but which is contrary to the public policy of this country, is not enforceable in its courts.

3. SAME—HARTER ACT.
The provisions of section 2 of the Harter act as to the limiting of liability by bills of lading or shipping documents do not apply to passenger tickets.

4. SAME—PASSENGER TICKETS—PROVISIONS RELATING TO BAGGAGE.
A provision in a passenger ticket relating to a limitation of the carrier's liability for loss of baggage, plainly printed in the face of the ticket above the signatures of the ship's agent and the passenger, is a part of the contract.

5. SAME—LIMITATION OF LIABILITY FOR LOSS OF BAGGAGE—VALIDITY.
A stipulation in a passenger ticket for second-cabin passage which limits the liability of the carrier for loss of baggage to 250 francs, unless the passenger declares the value of his baggage in excess of such amount, pays for the transportation of the excess in proportion to its value, and takes a bill of lading therefor, is not so unreasonable as to be void as against public policy.[1]

6. SAME—SCOPE OF LIMITATION.
Such a provision, though in terms limiting the liability of the "shipowner or agent" only, inures to the benefit of the ship itself, when sought to be held by proceedings in rem solely on the ground that the owner did not fully perform the contract.

Appeal from the District Court of the United States for the Southern District of New York.

These are cross appeals from a decree of the district court (88 Fed. 331) holding the libelants entitled to recover the equivalent of 250 francs apiece. The facts sufficiently appear in the opinion.

Roger Foster, for libelants.

H. G. Ward, for claimants.

[1] As to limitation of liability by carrier for passenger's baggage, see note to Clark v. Geer, 32 C. C. A. 308.

Digitized by Google

Before WALLACE, LACOMBE, and SHIPMAN, Circuit Judges.

LACOMBE, Circuit Judge. On December 2, 1897, the libelants, citizens of the United States, and residents of New Jersey, being at the time in Paris, France, purchased of an agent of the claimant, a New Jersey corporation, a ticket for their passage from Antwerp to New York by the British steamer Kensington, of the Red Star Line. They proceeded to Antwerp, where on December 10th they paid the balance of the purchase money, delivered their trunks to the vessel, and received a baggage check stating that said trunks were shipped "subject to the conditions contained in the company's ticket and bill of lading." The ticket, which is dated December 2, 1897, begins with a recital of the names of the passengers, and numbers of staterooms and berths, and states that it "is good for second-cabin passage of the persons named in the margin * * * by the British steamship Kensington from Antwerp on the 11th of December, * * * unless prevented from unforeseen circumstances, with 20 cubic feet of personal baggage for each adult passenger free of charge, excess being charged for at the rate of 125 francs per cubic foot." Immediately succeeding is the caption, "Notice to Passengers," and these words, "It is a condition upon which this ticket is granted, and is mutually agreed for the consideration aforesaid, that":— Here, as the district judge finds, follow 10 paragraphs in type somewhat smaller than the preceding type, but perfectly clear and legible, stating numerous conditions. The whole concludes with the clause: "All questions arising hereunder are to be settled according to Belgian law, with reference to which this contract is made." Then follows the signature, "John Macklin, for General European Agents." The relevant conditions included in the above-mentioned 10 paragraphs are these:

"(c) The shipowner or agent are not under any circumstances liable for loss, death, injury, or delay to the passenger or his baggage arising from the act of God, the public enemies, fire, robbers, thieves of whatever kind, whether on board the steamer or not, perils of the seas, rivers, or navigation, accidents to or of machinery, boilers, or steam, collisions, strikes, arrest or restraint of princes, courts of law, rulers, or people, or from any act, neglect, or default of the shipowner's servants, whether on board the steamer or not, or on board any other vessel belonging to the shipowner. * * * The shipowner will use all reasonable means to send the steamer to sea in a seaworthy state and well found, but does not warrant her seaworthiness. (d) The shipowner or agent shall not under any circumstances be liable for any loss or delay of or injury to passengers' baggage carried under this ticket beyond the sum of 250 francs, at which such baggage is hereby valued, unless a bill of lading or receipt be given therefor, and freight paid in advance on the excess value at the rate of one per cent., or its equivalent, in which case the shipowner shall only be responsible according to the terms of the shipowner's form of cargo bill of lading in use from the port of departure."

When their baggage was delivered to the company at Antwerp on December 10th, no statement was made of its value, and no freight was paid on its excess over 250 francs. The trunks were stowed in the after part of what is known as "No. 2 Upper Steerage Deck." Upon the arrival of the steamer in New York, it was discovered that the libelants' trunks, and baggage of other passengers, which, with some crates of china, had been stowed there, had been broken to

Digitized by Google

pieces, and the contents of the trunks destroyed by water, dye, and dirt.

1. The first contention of the claimant upon this appeal is that the district judge erred in holding that the claimant was bound to give proof of good stowage. There was evidence that the voyage was one of exceptional roughness; that on December 20th the steamer labored so heavily that she had to heave to for 14 or 15 hours, which had not previously occurred in the master's experience of 23 years; that she is a steamer of over 8,000 tons gross register, from 14 to 15 knots speed, and accustomed to make the trip in 10 days, but on the voyage in question she took 12 days; that the clinometer indicated that she rolled from 38 to 45 deg. either side. Upon these facts it is insisted that enough appears to show that the loss occurred by a peril of the sea, and that in this stage and posture of the case the burden was upon the plaintiffs to establish negligence of some kind on the part of the ship. In support of this contention, counsel cites Clark v. Barnwell, 12 How. 272; The Victory, 168 U. S. 423, 18 Sup. Ct. 149; The Neptune, 6 Blatchf. 193, Fed. Cas. No. 10,118. There was evidence, however, given by one of libelants' witnesses, who was present when the hatch was removed, that he descended immediately, and that, although he examined carefully, he could find no indications that the contents of No. 2 upper steerage had been lashed or otherwise secured against movement in rough weather. It is true that at the time of his examination the contents of the compartment were in such a chaotic state that the inferences to be drawn from his failure to discover any evidence of lashing down are not particularly strong; but, in the absence of any testimony whatever on the part of the ship as to how such contents were stowed and secured against the movements incidental to rough weather (the compartment was not filled), the evidence is sufficient to support the libelants' contention.

2. The claimant further contends that it should have the benefit of the provision in the contract of carriage exempting it from liability for the act, neglect, or default of its servants; such stipulation being authorized by the Belgian law. In reply it is sufficient to refer to Worsted Mills v. Knott, 27 C. C. A. 326, 82 Fed. 471, in which a majority of this court held that such a stipulation, being against the public policy of this country, was not enforceable by its courts. We are unanimous in the opinion that it cannot be enforced where both parties to the contract are citizens of the United States, and the place of completion of the contract is within this country. We concur also in the conclusion of the district judge that the provisions of the second section of the Harter act as to bills of lading and shipping documents do not apply to passenger tickets.

3. The main contention of the libelants is that the stipulation in the ticket against liability for injury to baggage in excess of the stated value of 250 francs is void, either because it did not amount to a contract, or because it is contrary to public policy, or because the sum named (250 francs) is unreasonably small. The same question was discussed by this court in The Majestic, 9 C. C. A. 161, 60 Fed. 624. That decision was reversed by the supreme court (The

Digitized by Google

Majestic, 166 U. S. 375, 17 Sup. Ct. 597) on the ground that the conditions or limitations relied upon in that case "were not included in the contract proper, in terms or by reference"; being printed on the back without any reference in the contract to such indorsement. In the case at bar, however, the clause relied upon is plainly included in the contract itself, above the signature of the ship's agent; and the reasoning of the opinion of this court in The Majestic, supra, applies. However unreasonable would be a "condition" attempting to relieve the carrier entirely from liability in excess of some named amount, there seems to be no impropriety in the carrier's requiring the passenger to declare the value of his baggage in excess of such named amount, to take regular bill of lading therefor, and to pay for its transportation in proportion to its value, with the proviso that, if he fails so to do, the carrier shall not be liable. As to the question whether the sum named (250 francs) is too small, the supreme court, in The Majestic, supra, intimated some doubt as to the reasonableness of £10 in the case of a first-cabin passenger's baggage, but rendered no decision thereon. In view of the circumstance that the condition complained of contained an offer to carry the excess value under a regular bill of lading, we are not prepared, in the absence of authority, to hold that 250 francs is an unreasonable valuation for personal baggage of a second-cabin passenger not thus carried.

The proposition contended for, that the clause in question provides only for the relief of the "shipowner or agent," and does not inure to the benefit of the ship itself, which in this suit is called upon to respond only because, as is alleged, the owner did not fully carry out its contract, seems to be without merit. The decree of the district court is affirmed, but, since both sides appealed, without interest or costs.

(94 Fed. 897.)

ALABAMA IRON & RAILWAY CO. v. AUSTIN et al.

(Circuit Court of Appeals, Fifth Circuit. May 23, 1899.)

No. 786.

1. EQUITY—JURISDICTION—NATIONAL BANKS—PREFERENCES.
   Equity has jurisdiction of a bill by a receiver of a national bank to set aside a transfer of notes made by the bank to prefer a creditor.
2. SAME—PLEADING AND PROOF—VARIANCE.
   A bill by the receiver of a bank to set aside a preferential transfer of notes, in violation of Rev. St. § 5242, is not sustained by proof that the notes were put into the transferee's hands for payment by him, and that, instead of paying them, he wrongfully kept them.
3. SAME—EVIDENCE—RES JUDICATA.
   Where an order dismissing a law case is pleaded in bar in an equity suit, and no proof is offered except the order itself, defendant cannot show the nature of the law case by affidavit after trial.

Appeal from the Circuit Court of the United States for the Northern District of Alabama.

Digitized by Google

In April, 1893, R. W. Austin, as receiver of the First National Bank of Sheffield, Ala., filed his bill of complaint in the United States circuit court for the Northern district of Alabama against the Alabama Iron & Railway Company. He alleged that he was duly appointed by the comptroller of the currency to the office of receiver of said bank; that on the 11th day of November, 1889, the First National Bank of Sheffield was indebted to the Sheffield & Birmingham Coal, Iron & Railway Company in the sum of $10,000; that at that time said First National Bank was largely indebted, and that the amount of its liabilities exceeded the value of its assets; that this fact was known to the president, cashier, and directors of the bank, and it was known and apparent to said officers that said First National Bank would presently be unable to meet its obligations, and that it would soon be obliged to suspend its business; that in contemplation of such insolvency, and with a view of giving preference to Jacob G. Chamberlain, receiver of the Sheffield & Birmingham Coal, Iron & Railway Company, over its other creditors, and also with a view and for the purpose of preventing the application of its assets in the manner prescribed by the laws of the United States, said First National Bank did on the 11th day of November, 1889, transfer, assign, and deliver to said receiver, as collateral to secure its said previous debts, certain seven notes of H. B. Tompkins, aggregating $8,506.27; that Chamberlain was appointed by said court receiver of said Sheffield & Birmingham Coal, Iron & Railway Company, which was subsequently dissolved and reorganized under the name and style of the Alabama Iron & Railway Company; that said notes were by said receiver, Chamberlain, delivered to the defendant corporation, the Alabama Iron & Railway Company, and that said notes are held by said defendant corporation, and were received by it, with full notice of all the facts above stated; that the defendant corporation also holds and owns the said claim against the said bank; that the defendant corporation now holds the said assets, and claims the right to apply them or the proceeds of their collection to the said debts of said First National Bank to the defendant corporation, and that, if the defendant corporation is allowed to do this, it will be an illegal preference over the other creditors of said First National Bank; that the assets of said bank are insufficient to pay its debts; that the said transfer to the defendant corporation was fraudulent and void; and that the said assets are the property of the orator, Richard W. Austin, to be administered by him as such receiver. The bill of complaint required the defendant corporation to answer, but without oath, the following interrogatories: Whether the defendant corporation, on the 11th of November, 1889, had on account the claim against the First National Bank of Sheffield, and, if so, the amount thereof; whether or not the notes were transferred to the defendant corporation, and, if so, when and on what consideration; whether or not at the time of said transfer the First National Bank of Sheffield was insolvent; whether or not at the time of said transfer it was in contemplation of insolvency; whether or not any of said notes so transferred to the defendant corporation have been collected, and, if so, what sums were collected. The bill of complaint prayed that the court decree the transfer of said notes to the defendant corporation to be null and void, and that the same are still the property of said First National Bank; that the defendant corporation be required to deliver the notes to the complainant, or to pay him the proceeds of the collection thereof; that the complainant have a decree against the defendant corporation for the said assets; and that the complainant recover the same, to be administered and applied to the payment of the claims of the creditors of said First National Bank. On October 10, 1894, the defendant corporation filed its answer. It admitted that on the 11th day of November, 1889, the said First National Bank was indebted to the Sheffield & Birmingham Coal, Iron & Railway Company in a large amount of money. It admitted that said bank was at that time largely indebted; but whether its liabilities exceeded the value of its assets, and whether this fact was known to the president and other officers of the bank, and whether it was known and apparent to the officers of the bank that it would soon be obliged to suspend its business, the respondent averred that it did not know, and asked that strict proof of said allegations be required. The respondent admitted that the notes were delivered to Chamberlain, as receiver, but denied that they were transferred in contemplation of insolvency, or with a view of giving a preference to Chamberlain, as receiver. The re-

Digitized by Google

spondent averred that it was informed and believed that the notes were transferred to Chamberlain in the usual course of business, and denied that they were transferred with the view and for the purpose of preventing the application of the assets of the bank in accordance with the laws of the United States. The respondent further answered that a day or two prior to the 11th day of November, 1889, Chamberlain, as receiver, made a deposit with said bank of a large amount of New York exchange, which was to be collected for him by the bank, and was to be delivered to him when collected; that the cashier of the bank, without instructions to that effect, credited the account of Chamberlain with the amount of such deposit; that on said 11th day of November, 1889, Chamberlain, learning that some drafts drawn by said bank on its New York correspondent had been protested, went to the cashier of said First National Bank, and telegraphed to its president, who was then in New York, and informed both of them that he would stop payment of said drafts if the same were still unpaid, and, if his said drafts were paid, he would demand the proceeds of said collections and the payment of his account; that the cashier of said bank informed him, when he was about to withdraw the amount to his credit, that there had been protests made of one of its papers, but that the same had been made good, and that the bank was in good condition, and, said Chamberlain insisting on drawing out the amount to his credit, the cashier informed him that he had sufficient funds to pay his deposit, but that the payment of such a large amount of money was more than the bank had expected, and its withdrawal would be a great inconvenience, and would temporarily cripple the institution; that Chamberlain insisted on withdrawing the balance and stopping the payment of his drafts, unless the bank would secure him against loss; whereupon the cashier delivered to him said notes as collateral security for the amount of his account. The respondent denied that the Sheffield & Birmingham Coal, Iron & Railway Company was dissolved, and reorganized under the name of the Alabama Iron & Railway Company, but that the fact is that the property of the former corporation was, by order of said court, sold and purchased by one Napoleon Hill, trustee, and, while it is true that a large part of the property formerly owned by said Sheffield & Birmingham Coal, Iron & Railway Company was subscribed to and became the property of the respondent, yet the respondent denies that said notes were delivered to it by Chamberlain, as receiver, but the same were sold and delivered by the officer of said court, who made sale thereof under its decree to the purchaser thereof, and the notes came in the possession of the respondent by being subscribed to its capital stock for valuable consideration, and without any notice to it of the facts alleged in the bill. The respondent admits that it holds said notes, and claims the right to apply the proceeds of their collection to the debt of said First National Bank, but it denies that such action would give it an illegal preference over the other creditors of said bank. The respondent admits that the assets of the bank are insufficient to pay its debts in full, but denies that the transfers to the respondent are fraudulent or void, or that the notes are the property of the complainant as receiver. In answer to the interrogatories, the respondent said that it did not at any time have an account or claim against the First National Bank, except as transferree of the account of the Sheffield & Birmingham Coal, Iron & Railway Company, which, on the 11th day of November, 1889, amounted to —— dollars; that the notes were transferred to the respondent on the —— day of ——, and the consideration was ——; that, at the time of the transfer of the notes to the respondent, the bank was insolvent, and had been in the hands of complainant, as receiver, for a considerable time; that none of the notes have been collected. On November 1, 1895, it was agreed in open court "that the defendant have leave to amend his answer herein, and to file demurrers, and that 60 days' notice be granted for submission of proof, and that decision may be had in vacation upon arguments or briefs to be submitted within 90 days." On November 12, 1895, the defendant demurred, averring that there is no equity in the bill; that it appears by the allegations of the bill that the complainant has a complete and adequate remedy at law; that it appears by the bill that the notes were never in the possession of said bank after Richard W. Austin was appointed receiver thereof; and that the defendant derived title to and possession of said notes from said Chamberlain, receiver of the Sheffield & Birmingham Coal, Iron & Railway Com-

Digitized by Google

pany. On November 12, 1895, the defendant also filed a plea in bar, averring that before the filing of said bill said complainant had filed in said court, on the common-law side thereof, an action of detinue to recover from the defendant upon precisely the same cause of action as is set forth in said bill of complaint; that said common-law cause was by complainant voluntarily dismissed out of the said court on the 14th day of December, 1894; and that the dismissal of said common-law cause operated as a common-law retraxit of the cause of action upon which it was founded. The replication was filed on November 15, 1895. On April 14, 1898, the parties agreed that the cause might be submitted for decree in vacation, and it was stipulated that the defendant might on the trial of the cause "insist upon the matter of defense set forth in the demurrer, plea in bar, and answer without waiving any of the rights of defense in either of said pleadings." The cause came on to be heard before the judge, in vacation, by consent of parties. The only proofs for the complainant were the depositions of one T. L. Benham and of Richard W. Austin, the complainant. Benham testified that he was the cashier of the bank; that on November 11, 1889, the bank held among its assets the seven notes of H. B. Tompkins; that on or about that day he received a telegram from the president of the bank, who was then in New York City, instructing him to compute the interest on the notes, and to take them to Chamberlain, and get a check for them; that he complied with the instructions by presenting the notes to Chamberlain for payment; that Chamberlain requested him to hold the notes a few days, and that he would let the witness know then whether he would pay them; that, after waiting a few days, he called on Chamberlain a second time; that Chamberlain requested him to leave the notes with him, saying that he would hold them and consult certain directors of his company, whom he was expecting to arrive soon; that he called on Chamberlain a third time, expecting to receive payment of the notes; that Chamberlain then informed him that said directors had instructed him to retain possession of the notes, and to hold them as collateral security against the amount which the bank owed him as receiver; that 18 days afterwards, namely, on November 29, 1889, the bank failed, Chamberlain retaining possession of the notes. Richard W. Austin, the complainant, testified that, aside from the notes in controversy, the assets of the bank will pay about 25 per cent., and that, if the notes should be recovered and the amounts claimed upon them, the assets will pay about 30 per cent. This was all the evidence offered for the complainant.

The defendant's proof consisted only of an order of dismissal of a cause by Richard W. Austin, as receiver of said bank, against the Alabama Coal, Iron & Railway Company. By an affidavit of H. B. Tompkins, which is found in the record, made on the 18th of November, 1898, evidently after the trial of this cause below, it would appear that all the original papers in the present cause, as also in the common-law action referred to in the plea in bar, were lost prior to the trial below; that an order was made on April 22, 1897, to re-establish the lost papers; that the papers in this equity cause were re-established, but that the papers in the common-law cause were not. The final decree in this cause was signed on August 15, 1898. It recites that the cause was heard and determined "upon the bill, demurrer, answer, plea, depositions, and other documents on file." The decree adjudged the assignment of said notes to be fraudulent and void, and the same was set aside. The decree further proceeded to adjudge "that complainant have and recover of the defendant the sum of $8,506.27 for the principal of the seven notes, with $4,593.37 as interest at 6 per cent. per annum, * * * making in the aggregate the sum of $13,099.64; and, if the sum is not paid within 30 days, execution should issue on complainant's demand, provided, however, that the delivery of all said notes to the clerk of this court within 30 days shall be accepted in full satisfaction of this decree." The defendant corporation appealed, assigning for error, among other matters, with much particularity and detail, that the demurrer and plea in bar should have been sustained, and that there is no evidence to sustain the decree; also that the decree is not in accordance with the prayer of the bill. In the brief on behalf of appellant it is said: "The scope and object of the prayer was for the recovery of the seven notes, or for the proceeds of the same if they had been collected. * * * A decree for a specific sum of money, without proof of the value of the past-due notes, and when no part of the prayer was for the money value of the notes, unless they had been collected, was obviously erroneous."

Digitized by Google

H. B. Tompkins and R. C. Alston, for appellant.
M. F. Caldwell, for appellee.

Before PARDEE and McCORMICK, Circuit Judges, and PARLANGE, District Judge.

PARLANGE, District Judge, after stating the facts, delivered the opinion of the court.

The appellee contends that, as the demurrer and the plea were filed after the answer, they came too late, and should not be noticed. But it is clear that the complainant consented that the demurrer and the plea might be filed and be passed upon, and he cannot now be heard to object that they were improperly or unseasonably filed. The trial judge evidently was of opinion, and properly so, that the demurrer and the plea were before the court by consent of parties, and in the decree he passed on the demurrer and the plea, as well as on the merits. But there was no force in the demurrer. The bill made out a sufficient case to authorize a court of equity to take jurisdiction. As to the plea, whatever merit it may have had, the defendant failed to offer any proof in its support, and it was therefore proper to overrule it. The order dismissing the law case, standing alone, did not substantiate the plea. The attempts to show by an affidavit made after the trial of this cause the nature of the law action which was dismissed cannot, of course, avail the appellant. On the merits, we are of opinion that the decree of the lower court should be reversed, for the reason that the complainant failed to prove his case. Three different theories as to the facts and circumstances of this case are presented: The bill charges substantially that the notes were transferred by the bank in contemplation of bankruptcy and otherwise, in violation of Rev. St. U. S. § 5242, for a pre-existing debt of the bank. The answer avers, in effect, that the transfer was not to secure a pre-existing debt, but to secure the collection of drafts by the bank. The proof would make a case where the notes were put in the hands of the receiver of the Sheffield & Birmingham Coal, Iron & Railway Company for payment by him, and where, instead of paying the notes, he kept them without right or authority. Inspection of the testimony of the two witnesses, which constitutes the entire evidence for the complainant, shows that he failed to prove the essentials of his bill of complaint.

In Railroad Co. v. Bradleys, 10 Wall. 299, it was said:

"It is hardly necessary to repeat the axioms in the equity law of procedure that the allegations and proofs must agree, that the court can consider only what is put in issue by the pleadings, that averments without proofs and proofs without averments are alike unavailing, and that the decree must conform to the scope and object of the prayer, and cannot go beyond them."

The decree appealed from is reversed, and the cause is remanded to said circuit court, with instructions to dismiss the bill.

Digitized by Google

(94 Fed. 901.)

REINHART et al. v. AUGUSTA MIN. & INV. CO. MANHATTAN TRUST CO. v. SAME. VAN VOLKENBURGH et al. v. PROUT et al.

(Circuit Court of Appeals, Fifth Circuit. May 31, 1899.)

No. 734.

1. CORPORATIONS—RECEIVERS—FUND CHARGEABLE WITH EXPENSES.
A receiver was appointed for a mining corporation, upon a bill alleging insolvency of the corporation, and inability to earn its charges and operating expenses. By consent, he was to operate the mines, and was authorized to borrow money, and was directed to pay all debts for labor and supplies incurred by the corporation within the six months preceding his appointment; payment to be made from earnings and income, or from money borrowed. *Held*, that the expenses of the receivership and the debts for labor and supplies were not payable alone out of the income and revenues of the corporation, but they might be paid out of the corpus of the estate.

2. SAME—MORTGAGES—PRIORITY.
The receivership was afterwards extended to a suit to foreclose a mortgage of the mining property, on motion of the trustee of the mortgage; and a decree was passed, without objection, ordering a sale, and giving the debts for labor and supplies, and the expenses of the receivership, priority over the mortgage. A decree of distribution was passed in accordance with the decree of foreclosure, and no appeal was taken therefrom, except by certain of the mortgage bondholders, who had caused the receiver to be appointed. *Held*, that the mortgage bonds were not entitled to priority over said expenses and debts, since the parties had agreed otherwise.

Appeal from the Circuit Court of the United States for the Northern District of Georgia.

On October 12, 1892, Joseph W. Reinhart, Phillip Van Volkenburgh, and others, citizens of the state of New York, filed their bill in equity in the circuit court of the United States for the Northern district of Georgia. The bill was brought for the complainants named in the bill, and such others as might thereafter be joined as complainants. The bill averred that the Augusta Mining & Investment Company, incorporated under the laws of the state of Virginia, owes the complainants certain promissory notes, due on demand, for money loaned said corporation to enable it to carry on its business in Polk county, Ga.; that payment of the notes had been refused, the corporation alleging as a reason for the refusal lack of money to pay the notes, or any part of them; that, in addition to said notes, said corporation was largely indebted to other parties, its principal indebtedness being the sum of $400,000 of first mortgage bonds, the majority of which is held and controlled by the complainants; that, while said bonds were not yet due, complainants believed and charged that there was great danger, owing to the character and condition of the assets of the corporation, and its inability to properly operate and carry on its business, on account of financial embarrassments, that it would not be able to pay the bonds when they became due; that but recently before the filing of the bill the corporation, being in need of funds to pay its current expenses, and to meet its obligations, which amounted to $75,000, issued debenture bonds for $75,000, the principal creditors of the corporation agreeing to take said bonds in payment of their claims, and the complainants hold, as such creditors, a majority of said debenture bonds, to wit, $40,000; that the interest due on said debenture bonds was not paid by the corporation, because of its inability to pay the same; that the corporation was largely indebted over and above the items of indebtedness above set out; that the corporation was the owner of large quantities of ore lands situated in the states of Virginia, Alabama, and Georgia; that said ore lands were very valuable, if the same could be fully equipped and operated, but that the defendant corporation was operating only three of its ore plants, and had equipped another, and was preparing to operate the same; that, while it

Digitized by Google

was true that the above property was valuable, yet that its value was less than the indebtedness of the company, and, if permitted to be brought to a forced sale or placed upon the market, it would be greatly sacrificed, and would not realize enough to pay any of its indebtedness; that not only was this true, but that the defendant had not been able to earn its fixed charges and operating expenses, but said charges and expenses had been allowed to accumulate until the corporation had become insolvent, and, unless its property and assets were taken in charge by a court of equity, the complainants and other creditors would not receive payment of their debts; and that, even under the best management, it was very doubtful if the corporation could meet its liabilities, and especially would this be true if the defendant were not protected from vexatious litigation and attachments, and other proceedings which were then threatened against it, the effect of which would be to entirely destroy all prospects for the payment of the complainants' claim then due, and the utter ruin of the only security which the complainants hold, being first mortgage bonds and debenture bonds. The complainants, in their own behalf, and in behalf of such other creditors as might become parties to the bill, prayed that the corporation might be brought to sale, or that if it should be deemed advisable, on account of the peculiar nature and character of the property, and on account of the fact that some of the debts were due and some not due, that no sale of the property should be had, but that the property should be kept together and operated by a receiver, and the profits of such business should be applied to the payment of the complainants' debts and such other debts as might be due, and the corpus maintained intact for the payment of the debts not due, then the complainants prayed that the court might decree accordingly. They prayed further for the appointment of a receiver to take possession of the property, with the usual powers of receivers in such cases, with the power to manage and operate all of the ore banks then equipped and in operation, and with power to equip and operate more if it should be deemed advisable, and receive all the earnings and income thereof during the pendency of the suit, and with such other powers as should seem to the court right and proper.

On the same day on which the above bill of complaint was filed, to wit, on October 12, 1892, Charles W. Haskins was appointed temporary receiver, the defendant corporation consenting to the appointment. The receiver was directed by the order appointing him to take possession of all the property of the corporation, with power as prayed for in the bill of complaint, and to manage, operate, and maintain the several ore banks, with authority to employ officers, employés, and workmen, to keep the property equipped and in operation, and to collect all rents and revenues derived from the property over and above all expenses and liabilities authorized by the order of appointment. The receiver was specially authorized to pay all necessary and current expenses in the operation of the ore banks. It was also ordered that the debts for labor and for supplies and materials done or furnished since July 1, 1892, be paid by the receiver. The above order of October 12, 1892, was made on the motion of complainants. On October 19, 1892, the receiver reported to the court that by the order appointing him he was authorized to pay for materials and supplies furnished to the company, and wages for labor, since July 1, 1892, but that on account of extraordinary work done by the company, in building a railroad from the company's property to the East & West Railway, he had not sufficient funds in hand to pay all these expenses covered by the court's order; and the receiver therefore asked that he be authorized and empowered to borrow not more than $12,000, or such part thereof as might be necessary, upon his note or notes, drawing not more than 8 per cent. interest, and the notes extending for a period not exceeding 12 months,—the receiver to report his action in the premises to the court. Upon this application, the court, on October 19, 1892, with the consent of the complainants, made an order authorizing the receiver to borrow not exceeding $12,000, under the terms and for the purposes set forth in the application. On October 31, 1892, on the motion of the complainants for the appointment of a permanent receiver, the defendant corporation consenting, the court appointed Charles W. Haskins as permanent receiver. Amongst other things, the order provided that: "It is further ordered, in addition to the powers heretofore vested in said receiver by the orders of this court, that he is hereby authorized to pay out of such fund, as such receiver, that may come into his hands, from the earnings and income of the property, or that he has been or may be author-

Digitized by Google

ized by this court to borrow for such purposes, all the debts due for labor and wages and for materials and supplies done and furnished to said defendant corporation for six months prior to his appointment as receiver. * * * It is further ordered that all matters and things set forth in the order appointing said Haskins temporary receiver, and also in the order heretofore granted by the court authorizing said receiver to borrow money for the purposes set forth in said order, be, and the same are hereby, ratified and reaffirmed, and made a part of this order, in so far as they are appropriate and proper." On the 31st of May, 1893, the Manhattan Trust Company filed its bill of complaint in the United States circuit court for the Northern district of Georgia. It alleged that it was the trustee of a mortgage executed by the Augusta Mining & Investment Company to secure an issue of $396,000 of first mortgage bonds; that the defendant corporation had made default in the payment of interest due upon the bonds; that by reason of such default the bonds had become due, under the terms of the mortgage; and that the complainant was entitled to a foreclosure of the same. The bill made special reference to the bill of complaint filed on October 12, 1892, by Joseph W. Reinhart and others, which has already been stated. Special reference was also made to the appointment of Haskins as receiver, and to the above-mentioned orders of court concerning said receiver. The bill alleged that the earnings of the Augusta Mining & Investment Company for the past year had been, and still were, greatly inadequate to meet and discharge the accruing obligations of interest upon its bonded indebtedness, or the payment of its current expenses, charges, and indebtedness. The bill also averred that said corporation was wholly insolvent. The bill prayed for the appointment of a receiver to the property of the corporation, and for the foreclosure of the mortgage.

On May 31, 1893, a motion for the appointment of a receiver on the bill of complaint of the Manhattan Trust Company, or to extend the receivership in the cause in which Reinhart and others were complainants, came on to be heard before the court; and, on the motion of counsel for the Manhattan Trust Company, it was ordered that the receivership of the property of the Augusta Mining & Investment Company, theretofore made, by the appointment of Haskins as permanent receiver, be extended to the second cause, and that Haskins be appointed and continued as receiver in the second cause, with all the rights and powers as such receiver in the second cause which were conferred upon him under the said decrees of the court entered in the suit by Reinhart and others, of date October 12, 1892, and October 31, 1892, respectively. Subsequently, on motion of the attorneys for the complainants in the above causes, the attorneys for the defendant consenting, the two causes were consolidated, and it was agreed that the final decree be taken in said causes as consolidated. On January 23, 1895, the decree of foreclosure was signed. The decree fixed the amount which the defendant corporation should pay into the registry of the court to prevent foreclosure, and classified the same as follows: "First, a sufficient sum of money to cover the expenses of the receivership, including obligations and debts incurred by the receiver under the order and direction of the court, and the compensation of the receiver and his counsel, and any other preferential claims and debts that may be allowed by the court to parties to this cause, and the court costs;" second, the expenses of complainants, including counsel fees; third, the amount of the mortgage bonds. In case these amounts were not paid, the decree provided that the property be sold, and also provided for the payment of: "First, all court costs, and the costs of the master commissioner in making the sale under the decree; second, the payment of the fees of the receiver of the property, and his reasonable attorney's fees, to be fixed by the court, and all proper obligations incurred by him under the authority of the court, as the same shall be determined and allowed by the court." On August 2, 1897, a master in chancery was appointed by the court to report, among other things, upon all debts and claims against the defendant corporation and the receiver which were alleged to be prior in rank to the bonds secured by the mortgage made to the Manhattan Trust Company as trustee. The master found and reported that all parties holding receiver's certificates for indebtedness due by the Augusta Mining & Investment Company prior to October 12, 1892, have no priority over the mortgage bonds, but that all the debts contracted by the receiver since his appointment are entitled to a preference over the mortgage bonds. Joseph W. Reinhart, Phillip Van Volkenburgh, and others,

Digitized by Google

all alleging themselves to be bondholders of the Augusta Mining & Investment Company, excepted to that part of the master's report which gave priority over the bonds to the debts contracted by the receiver since his appointment. The parties whose claims were postponed to the bonds by the master excepted to such postponement. No exceptions were taken by the Manhattan Trust Company. On February 28, 1898, the court made a decree by which it confirmed the master's report as to the debts which he had found to be prior to the mortgage bonds, but overruling the master as to the debts which he had found to be inferior to the mortgage bonds. The decree recited that: "The exceptions filed to the report of the master are overruled, except as hereinafter specified; and the report of the master, except as so specified, is hereby confirmed, and made the judgment and decree of the court. It appears from the report of the master that certain notes were made by the receiver, under orders of this court entered October 12, 1892, and October 19, 1892, in payment of debts against the Augusta Mining & Investment Company for wages of employés and for materials and supplies furnished to said company for six months prior to the appointment of the receiver, which notes are specifically set out in Schedule No. 3 of the supplemental report of the master. The master found in his report that these notes, made under said orders of this court, were not entitled to priority of payment over the bonds secured by the mortgage to the Manhattan Trust Company; and to this finding of the master each one of the parties holding said notes set out in Schedule No. 3, as above mentioned, filed exceptions. It is ordered that the exceptions so filed be, and the same are hereby, sustained and allowed, and that the holders of said notes take precedence, as receiver's expenses, in the fund arising from the sale of the property described in the mortgage to the said Manhattan Trust Company. It is further ordered and decreed that the fund arising from the sale of the property be distributed according to the priorities set out and fixed in the original decree of foreclosure."

H. E. W. Palmer, for appellants.

Alex. W. Smith, Alex. C. King, Jack J. Spaulding, and T. A. Arnold, for appellees.

Before McCORMICK and SHELBY, Circuit Judges, and PARLANGE, District Judge.

PARLANGE, District Judge (after stating the facts as above). All the claims in dispute in this case are just and proper in themselves, the only contest being as to their rank. The theory upon which the appellants have proceeded, both in the lower court and in this court, is that the expenses of the receivership, and the debts for labor and supplies incurred by the Augusta Mining & Investment Company during the six months which preceded the appointment of the receiver under the Reinhart bill, should be paid out of the income and revenues of the corporation, and not out of the corpus, and also that the mortgage bonds are entitled to a priority over all such expenses and debts. The appellants are bondholders of the corporation, who have undertaken to proceed independently of the trustee of their bonds, and, it would seem, in opposition to the trustee's views of the correctness of the decree appealed from. These appellants are, in the main, the same parties who instituted or joined in the Reinhart bill, under which the receivership was inaugurated. The bill which they filed to obtain from the court the appointment of a receiver shows that the corporation was insolvent, and that it was even unable to earn its charges and expenses. If we are to believe the appellants, they asked the lower court to do an apparently impossible thing, and the court undertook to do it. The appellants' contention amounts to saying that the court, looking solely to the income and

Digitized by Google

revenues of a corporation which was shown to be insolvent, and even unable to meet its charges and expenses, engaged in the task of maintaining and carrying on the business of the corporation, and of paying, not only its running expenses, but also its debts for labor and supplies incurred during the six months which preceded the appointment of the receiver. The Reinhart bill even prayed that the receiver be empowered to equip and operate other ore banks than those which were then being operated. It could not be contended seriously that, if the orders of the lower court had borne only on such revenues as might be expected from a corporation in the ruinous condition in which the Reinhart bill alleged that the Augusta Mining & Investment Company was, any one could have been found to lend money to the receiver. It may then be fairly said that Reinhart and others are attempting to show that they asked the court to undertake the receivership under impossible conditions. There were no limitations placed upon the temporary receiver as to payment out of revenues, in the order authorizing him to borrow money. This order was specially consented to by Reinhart and others. They then applied for the appointment of a permanent receiver, and upon that application the temporary receiver was appointed as permanent receiver, the previous order authorizing the temporary receiver to borrow money was affirmed, and the permanent receiver was directed to pay all debts for labor and supplies incurred during the six months preceding his appointment, not only from earnings and income, but also from such moneys as he was or might be authorized by the court to borrow for the purpose. Subsequently the Manhattan Trust Company, trustee of the mortgage, caused the receivership to be extended to the foreclosure suit, and it is plain that the trustee adopted all prior proceedings and orders. The decree of foreclosure again made it evident that the debts and expenses paid by the receiver were to outrank the mortgage. The appellants did not complain of the decree; and it should be specially noticed that the Manhattan Trust Company, which, as trustee of the mortgage, represents the appellants as well as all other bondholders, has never complained of the action of the lower court in postponing the mortgage to the debts and expenses paid by the receiver. The trustee did not complain of the foreclosure decree, nor did it except to the master's report, nor has it appealed from the decree of February 28, 1898. It is not even intimated that the trustee has been derelict in its duty to protect the interest of the bondholders. It is plain that the trustee has acquiesced in the correctness of the decree appealed from.

Fosdick v. Schall, 99 U. S. 235, and other cases, have been cited to us by appellants' counsel, who urge that, under the doctrine of those cases, the lower court had no power to postpone the mortgage to the debts and expenses paid by the receiver. The case before us is not one in which the principles of the cited cases come into play. The present case is simply one in which the matters complained of have been consented to by the parties. There is no error in the decree appealed from, and it is therefore affirmed.

Digitized by Google

(94 Fed. 906.)

UNITED STATES v. CENTRAL PAC. R. CO. et al.

(Circuit Court of Appeals, Ninth Circuit. May 2, 1899.)

No. 481.

PUBLIC LANDS—RAILROAD GRANT—PRE-EMPTION CLAIMS.

A pre-emption settler on unsurveyed public lands, who, at the time a railroad grant attached by the definite location of the line of road, had in no way indicated the boundaries of his claim, cannot, by thereafter extending his improvements over a tract which he had not at that time claimed or improved, and which by the subsequent survey was shown to be within a section granted to the railroad company, acquire any claim or rights thereto as against the railroad company.

Appeal from the Circuit Court of the United States for the Northern District of California.

Marshall B. Woodworth (H. S. Foote, of counsel), Asst. U. S. Atty. W. Singer, Jr. (Wm. F. Herrin, of counsel), for appellees.

Before GILBERT and ROSS, Circuit Judges, and HAWLEY, District Judge.

HAWLEY, District Judge. This suit is brought to cancel a patent issued to the defendant the Central Pacific Railroad Company, as the successor in ownership to the California & Oregon Railroad Company, on January 24, 1880, to the E. ½ of N. E. ¼ of section 33, township 22 N., range 4 E., M. D. M., on the ground that it was issued "through mistake, inadvertence, and error." The land in controversy is within the land grant made to the California & Oregon Railroad Company under the act of congress of July 25, 1866 (14 Stat. 239). This act granted to the railroad company 10 odd sections of land on each side of the railroad line, not "granted, sold, reserved, occupied by homestead settlers, pre-empted, or otherwise disposed of." The map of the definite location of the road was filed in the office of the secretary of the interior September 13, 1867, and on October 29, 1867, the lands lying within the limits of the grant were withdrawn from sale by the commissioner of the general land office. The question presented is whether one Michael Lannon had acquired a right of pre-emption to the land prior to September 13, 1867, when the line of the railroad was definitely fixed and located.

It appears from the testimony that in 1858 the said Michael Lannon, being then an alien, and engaged in the business of mining near the land in controversy, settled upon the W. ½ of the N. W. ¼ of section 34, township 22 N., of range 4 E. This and the land in controversy were adjoining subdivisions of the then public, unsurveyed land, containing 80 acres each. The land was surveyed in September and October, 1878, and the official plat of this survey was filed in the land office December 14, 1878. Lannon on February 11, 1867, qualified himself to make a pre-emption claim by filing his intention to become a citizen of the United States. In 1869 Lannon cleared the land in controversy, in 1870 he cultivated a portion of the land, and in 1871 he built a house and moved upon the land. Prior to that

Digitized by Google

time he lived in his house on section 34, upon the 80 acres of land which is not in controversy in this suit. On May 21, 1879, Lannon filed his declaratory statement with the register of the land office at Marysville, Cal., upon the 80 acres of land in section 34; and on December 20, 1879, he filed an application to amend his pre-emption declaratory statement so as to include the 80 acres in controversy, which was allowed by the acting commissioner of the land office.

We are of opinion that Lannon was not, at the date the railroad's grant attached, to wit, September 13, 1867, entitled to pre-empt the land in controversy. He was not a pre-emption settler upon the land, within the provisions of section 2259, Rev. St., which declare that:

"Every person * * * who has made, or hereafter makes, a settlement in person on the public lands subject to pre-emption, and who inhabits and improves the same, and who has erected or shall erect a dwelling thereon, is authorized to enter with the register of the land office for the district in which such land lies, by legal subdivisions, any number of acres not exceeding one hundred and sixty, or a quarter section of land, to include the residence of such claimant."

There is no testimony in the record which shows that prior to September 13, 1867, when the map of the definite location of the railroad was filed, the said Lannon had ever entered upon the land in controversy, or claimed or intended to claim the same, or made any improvements thereon of any kind, or exercised any act of dominion or control over it in any manner whatsoever. The ground floor, upon which the entire superstructure of appellant's argument is built, is based upon the proposition "that Lannon intended to and did claim to have settled upon, cultivated, and improved 160 acres from the time of his original settlement to the date of his official survey in 1878," and that the land in controversy was embraced in said claim, and it is contended that these facts are "established by the evidence beyond contradiction." The testimony upon which appellant chiefly relies is, as stated by counsel, "best described in Lannon's own simple style." In his direct examination, Lannon testified as follows:

"Q. What was your object in settling here and building a house? A. My object was to make a home, if I lived to be old. Q. Did you know how much land you were entitled to as a pre-emptor or a homesteader? A. I did, but I never had any way to file on it until the government survey was made. * * * Q. You did know how much you was entitled to? A. Yes. Q. Did you at any time prior to May, 1871, indicate in any way— How much land did you understand you were entitled to? A. I understood I was entitled to 160 acres of land,—of government land from the government. Q. Did you, prior to May, 1862, in any way and in what manner, indicate what particular 160 acres of land you intended to make your home? A. Yes; that land that suited me, that was suitable for a man to take, that could be cultivated. Q. The question is, did you indicate it, and, if so, by what means; that is, did you fence it round, run furrows around it, or stake it, or blaze it, or anything of that kind? A. No, sir; there was nothing in that part of the country staked out or blazed out by any settler until the government survey was made. Q. Did you assert ownership or claim to any particular 160 acres? A. Yes. Q. What was it? A. Just this same land now that I live on,—that I made my improvements on. That is the same land. * * * Q. What did you mean by making affidavit that you moved on it in 1858? A. There was no odd sections and no even sections there then. I claimed 160 acres of government land whenever it came on the market. When the north and south line was run, it cut my improvements in two, like that, and threw all my buildings and or-

Digitized by Google

chard and vineyard upon this odd section. Q. What 160 acres of land did you claim, sir? A. I could not say what 160 acres it was. There was no sections. How could a man claim any 40 or 80? How could he name it?"

It will be noticed that this testimony is in many respects uncertain and indefinite. The effect of his testimony is made more specific upon his cross-examination, as follows:

"Q. You moved on this land in 1870, didn't you, Mr. Lannon,—this particular piece of land in controversy? I think you stated that you cleared it in 1869 and 1870, and moved on and built your house in 1871. A. Exactly; moved and got a crop of hay in June, 1871. Q. You were on the land before 1869, were you not? A. I was not living on it, but I had labor done,—cleared and cropped. Q. In 1869? A. In 1870. Q. Had you done anything on this land before 1869? You had not done anything, had you, on the land before 1869? A. Nothing more than cutting brush. Q. What year did you do that first? A. In 1869 and '70. Q. Then in 1868 you had not cut any brush or cleared the land at all, had you? A. No, sir. * * * Q. When was it that you first went on this particular piece of land? In what year was it,—1868, 1869, or 1870? A. 1871,—1870 and 1871. * * * Q. You have repeatedly stated that you did not settle on this land because it was not surveyed. Now, without regard to the survey, without describing it by the survey, what 160 acres did you claim around and about your house there,—the cabin,—the first house you put up? A. The portion of land that I wanted was where I put in a crop; that could be cultivated; all cleared and cropped. That was the land that I intended to claim, if it ever came on the market, and that is the land I improved. Q. You intended to; but did you claim, or did you simply intend to claim, it? A. I intended, when it came on the market, that I would claim it. Q. The question is, did you claim it from the time you settled there, or did you simply intend to do it? A. Yes. Q. Which? Did you intend to, or did you, claim it? Did you claim it always? Did your neighbors know what particular 160 acres you claimed there? A. They did not know. Q. I do not mean by description, but did they know the particular tract of land you claimed, without regard to the description of it by survey? A. They did not. Q. Couldn't you have gone and pointed out the lands independent of any survey? A. I could not, because the miners were scattered back and forth in these ravines. I have always claimed 160 acres. Q. What 160 acres? A. This same land I made my improvements on."

If Lannon had indicated by act or deed his intention prior to September 13, 1867, to claim the land in controversy as a part of the land he had located upon in 1858, then his improvements and dwelling on the 80 acres where he first resided might have been sufficient to enable him to maintain his claim thereto, unless the legal questions discussed by counsel would deprive him of that right. But in the absence of any such indication until after September 13, 1867, we think the facts are wholly insufficient. Lannon gained no additional rights by his entry, settlement, and residence upon the land in controversy after September 13, 1867. We are of opinion that the action of the circuit court in refusing to cancel the patent upon this ground was correct.

It is evident from the testimony quoted that Lannon is an illiterate man, and it is argued that allowance ought to be made upon that ground in considering his testimony. The courts have always been liberal in their construction in favor of the rights of settlers upon the public land, but ignorance of the law, or failure to comply with it, cannot be considered in the acquisition of a right created by statute, where the statutory requirements have not been complied with. As was said in Maddox v. Burnham, 156 U. S. 544, 547, 15 Sup. Ct. 449:

Digitized by Google

"It cannot be that when he fails, even by reason of his poverty, to do that which the law prescribed as the initiation of any rights in the land, he is nevertheless entitled to the same protection which he would receive had he complied with the statute. Leniently as the conduct of a settler is always regarded by the courts, it cannot be that such leniency will tolerate the omission by him of any of the substantial requirements of the statute in respect to the creation of rights in the public lands."

The decree of the circuit court is affirmed.

(94 Fed. 921.)

HOWARD INS. CO. OF NEW YORK v. SILVERBERG et al.

(Circuit Court of Appeals, Ninth Circuit. May 2, 1899.)

No. 490.

1. APPEAL BOND—PLACE OF EXECUTION.
   An undertaking on appeal given to stay proceedings pending the appeal is not delivered, so as to become effective, until filed, and hence, though signed in another state, is "executed" in the state where filed.
2. LIMITATION OF ACTIONS—APPEAL UNDERTAKING—EFFECT OF FURTHER APPEAL.
   The running of the statute against an action on an appeal undertaking given on appeal to the general term of the superior court of the city of New York is not affected by the taking of a further appeal from the judgment of the general term to the court of appeals.

In Error to the Circuit Court of the United States for the Northern District of California.

This action was commenced in the circuit court of the Northern district of California to recover upon an undertaking on appeal which had been executed by the defendants in error on August 9, 1892, in a case then pending in the superior court of the city of New York, in which the Howard Insurance Company of New York was the plaintiff, and Julius Jacobs and George Easton were the defendants, and in which a judgment had been rendered for the plaintiff in the sum of $7,485.83. A condition of the undertaking on appeal was that the defendants in the action should pay all costs and damages which might be awarded upon the appeal, and that, if the judgment appealed from should be affirmed, they would pay the amount thereof. The appeal was taken to the general term of the superior court of the city of New York. On January 15, 1894, the appellate court affirmed the judgment. 26 N. Y. Supp. 1133. On December 13, 1894, Jacobs and Easton appealed from the judgment of affirmance to the court of appeals of the state of New York, and in 1896 the latter court affirmed the judgment so appealed from. 45 N. E. 1132. On December 22, 1897, the present action was brought against the sureties on the appeal bond.

The circumstances under which the undertaking was executed, as they are set forth in the complaint, are as follows: Jacobs and Easton, the defendants in the action in the superior court, desiring to appeal from the judgment of that court, requested the plaintiff in the action to accept a bond on appeal, to be signed by Silverberg and Pease, who were residents of California, as sureties. The plaintiff acceded to the request, an undertaking was signed by Silverberg and Pease in San Francisco on August 9, 1892, and on the following day both sureties verified the undertaking before a commissioner for New York in San Francisco, before whom, on the same day, they also acknowledged the instrument. On September 10, 1892, the undertaking was filed in the superior court of the city of New York, together with a written stipulation between the parties to the action to the effect that the plaintiff would not except to the sureties on said undertaking, and that such undertaking might be filed, and that no exception should be taken to its form, or to the time of its filing, or to the

Digitized by Google

justification of its sureties, and that such undertaking should operate as a stay of proceedings. The parties were permitted to enter into such a stipulation under section 1305 of the Code of Civil Procedure of New York. A demurrer was interposed to the complaint, on the ground that the cause of action was barred by subdivision 1 of section 339 of the Code of Civil Procedure of California, which provides that an action on a contract, obligation, or liability founded on an instrument of writing out of the state must be commenced within two years after the cause of action has accrued. The circuit court sustained the demurrer, and a judgment was entered dismissing the action. 89 Fed. 168. This ruling is assigned as error.

Abraham C. Freeman, for plaintiff in error.

Edmund Tauszky, Lester H. Jacobs, and W. E. F. Deal, for defendants in error.

Before GILBERT and ROSS, Circuit Judges, and HAWLEY, District Judge.

GILBERT, Circuit Judge, after stating the facts as above, delivered the opinion of the court.

The controlling question presented in this case is whether the undertaking on appeal was executed without the state of California. No instrument is executed until it is delivered. To constitute a delivery, the obligor must do some act which places the instrument beyond his control and beyond his power of revocation. Duer v. James, 42 Md. 492; Fisher v. Hall, 41 N. Y. 416; Younge v. Guilbeau, 3 Wall. 636. The delivery need not always be made to the obligee personally. It may be made to a third person in his behalf. Hatch v. Bates, 54 Me. 136; Cooper v. Jackson, 4 Wis. 538; Sneathen v. Sneathen, 104 Mo. 201, 16 S. W. 497. A bond on appeal is not delivered to the opposite party to the suit. It is delivered to the clerk of the court, who files it and holds it on behalf of the obligee for whose benefit it is given. Section 1307, Civ. Code N. Y., provides that an undertaking "must be filed with the clerk with whom the judgment or order appealed from is entered." There can be no doubt that, as a general rule, the filing of an undertaking on appeal is its delivery. The proposition that the place of the delivery of such an instrument will, in the absence of an agreement to the contrary, be deemed to be the place of its execution, irrespective of the place where it was signed, and that a contract is made in that state in which it first takes effect as a binding obligation, is fully sustained by the authorities. In Bell v. Packard, 69 Me. 105, it was held that a promissory note written in Maine, but signed in Massachusetts, by citizens living there, and then returned by mail to the payee, living in Maine, is a note made in Maine, and to be construed by the laws thereof. The court said: "For, although it was signed in Cambridge, it was delivered to the payee in Skowhegan, and it was not a completed contract until delivered." In Lawrence v. Bassett, 5 Allen, 140, the defendant had put his name on the back of a note in another state while it was in the hands of the original maker, and before it was delivered to the payee. It was subsequently passed to the payee in Massachusetts for a valuable consideration. The court held that it then for the first time became a valid promise to pay the money, and said: "Until such delivery, it was not a binding

Digitized by Google

and operative contract, upon which the defendant could have been held as a party to the note. It was therefore the delivery to the plaintiff which completed and consummated the contract." In Milliken v. Pratt, 125 Mass. 374, the court held that a contract of guaranty signed in Massachusetts, and sent by mail to another state, and assented to and acted on there, for the price of goods sold there, is made in that state. The court said: "If the contract is completed in another state, it makes no difference in principle whether the citizen of this state goes in person, or sends an agent, or writes a letter, across the boundary line between the two states." In Forst v. Leonard (Ala.) 22 South. 481, it was held that, although a bond may be signed at one time, its execution does not occur until its delivery. Said the court: "The bond * * * speaks from the time of delivery,—from its execution, and not from its signing." So, in Tilden v. Blair, 21 Wall. 241, it was said: "It has been settled that the liability of an acceptor does not arise from merely writing his name on a bill, but that it commences with the subsequent delivery." In State v. Young, 23 Minn. 551, the court said: "It is almost an elementary principle, laid down in all the books, that a bond is not 'executed' until it is delivered, for delivery is of the essence of a deed."

But it is urged that the undertaking in the present case must be held to have been executed in the state of California, for the reason that there the final assent thereto was given. It is said that the plaintiff in the action had agreed to accept the defendants in error as sureties; that thereafter no further act was required than that they should attach their signatures to the undertaking; and that when they signed the same, and parted with its possession, the transaction was complete. We are unable to assent to this view of the facts or of the law applicable to them. Up to the date of the filing of the undertaking, there was no binding agreement of any kind between the parties. There had been a request on the part of the defendants in the action that the plaintiff accept sureties residing in California, and the request had been assented to. But there was no stipulation in writing, and there was nothing to hold either party to the agreement. It was nudum pactum. The first and only agreement that had binding force was the stipulation that was entered into when the bond was filed in the state of New York. The plaintiff in the action had not bound itself to accept as an undertaking on appeal any instrument that might come from California bearing the signatures of the sureties named. The final act was not the signing of such an instrument by the sureties, but its acceptance by the opposite party and its delivery. This is evidenced by the stipulation which accompanied it when it was filed. Up to that time the sureties on the bond had the right to recall the instrument. They could have revoked it at any time before it left the possession of the defendants in the action. There was no consideration for their liability as sureties before the bond was actually used on the appeal. The stipulation by which it was accepted was made between the parties to an action pending in the state of New York, and

Digitized by Google

with reference to an appeal to a court of that state, and with reference to an undertaking which had been signed, verified, and acknowledged, but not yet delivered. The complaint, after referring to the execution of the stipulation, contains this averment: "That thereafter, on the same day, the said undertaking on appeal was filed by the said Jacobs and Easton in the office of the clerk of said superior court last named, and a copy thereof served upon this plaintiff, and the appeal of said Jacobs and Easton from the said judgment was then perfected, and a stay of the execution thereof effected." The only inference to be drawn from the facts as they are stated in the complaint is that when the stipulation was entered into the undertaking was in the possession of the defendants in the action in the state of New York, and that then they parted with its possession and delivered it to the clerk. We find nothing in the allegations of the complaint, construed, as they must be, in the light of the statutes of New York, so far as the latter are applicable, to indicate that it was the purpose of the parties to the action to regard the bond as an instrument executed in the state of California, or to dispense with any of the requirements of the law of New York with reference to bonds on appeal, except in the one specified particular, that the sureties on appeal might be residents of the state of California.

The case of Alcalda v. Morales, 3 Nev. 132, cited by the plaintiff in error, is not authority for its contention. In that case one of two partners doing business in Nevada went to Sacramento, Cal., to borrow money for the firm. He negotiated a loan, signed a promissory note in Sacramento, and obtained the money upon it. The note was then sent to the other partner, who executed it in Nevada, and returned it to the plaintiff, in Sacramento. It was held that the note was executed in Nevada. It was so held for the reason that the form of the paper had been agreed upon in California, and there accepted, and there the money had been obtained thereon, and nothing remained to be done except to obtain the signature of the other partner, and that when his signature was appended, and the note left his possession on its way to the plaintiff, the transaction was closed. The vital points which distinguish that case from the case at bar have already been suggested. When the defendants in error signed the bond in California, the transaction was not closed. Their signature was but the first step. The undertaking had not been accepted. No stipulation had been made, as provided by statute, assenting to the undertaking or waiving the nonresidence of the sureties. There is nothing in the complaint to show that the plaintiff in the action had seen the instrument or knew its terms, or, indeed, to show that it was not drawn in California at the time when it was signed there. The plaintiff was under no obligation to accept the bond, nor to accept the defendants in error as sureties. It had parted with none of its rights. Execution upon its judgment had not been stayed. Payment of the judgment could have been enforced by process at any time before the undertaking and the stipulation were filed. How, then, can it be said that when the sureties signed the under-

Digitized by Google

taking, and parted with its possession, the last act had been done and the transaction was closed?

It is contended that no action could be maintained on the undertaking until the final decision of the case by the court of appeals, and that the statute of limitations began to run only from the date of such final decision. The complaint expressly states that on the appeal from the decision of the general term of the superior court to the court of appeals there was no undertaking to stay the execution. Section 1309 of the New York Code of Civil Procedure provides that where security is given on appeal to the court of appeals to stay the execution of the judgment appealed from "an action shall not be maintained upon the undertaking given upon the preceding appeal until after the final determination of the appeal to the court of appeals." By implication, the statute permits such an action, in the absence of an undertaking to stay the execution, and it accords with the practice prior to the adoption of that provision of the Code. Burrall v. Vanderbilt, 6 Abb. Prac. 70; Heebner v. Townsend, 8 Abb. Prac. 234. The undertaking in this case was to secure the payment of the judgment that might be rendered in the court to which the appeal was then to be taken. It contemplated no second appeal. The conditions on which the sureties' liability was to attach were met when, on January 15, 1894, the general term of the superior court rendered its decision. On that date the cause of action against the sureties on the undertaking accrued and the statute began to run. The second appeal, taken 11 months later, could not operate to toll the statute.

On the argument of the cause in this court, the point is made that subdivision 1 of section 339 of the California Code of Civil Procedure is opposed to the provisions of the constitution of the United States, and is therefore void. We do not need to enter into a discussion of this proposition. The point was not made in the assignments of error, and is not properly before the court. If it were, we should be compelled to dismiss the appeal. Hamilton v. Brown, 3 C. C. A. 639, 53 Fed. 753; Hastings v. Ames, 15 C. C. A. 628, 68 Fed. 726; Pauley Jail Bldg. & Mfg. Co. v. Crawford Co., 28 C. C. A. 579, 84 Fed. 942; Wrightman v. Boone Co., 31 C. C. A. 570, 88 Fed. 435.

The judgment will be affirmed.

(94 Fed. 925.)

BOWEN v. NEEDLES NAT. BANK et al.

(Circuit Court of Appeals, Ninth Circuit. May 15, 1899.)

No. 499.

1. NATIONAL BANKS—POWERS—CONTRACT OF GUARANTY.

A national bank has no power to lend its credit to any person or corporation, or to become guarantor of the obligations of another, except in the case of the transfer of promissory notes discounted, which is in the ordinary course of banking.

Digitized by Google

2. CORPORATIONS—CONTRACTS ULTRA VIRES—ESTOPPEL.

A contract entered into by a corporation, which is ultra vires of its charter, cannot be ratified or become binding on the ground of estoppel, and the only ground on which the corporation can become liable to the payment of money on account of such a contract, which has been performed by the other party, is that it has received a benefit or advantage thereby which it cannot justly retain.

3. NATIONAL BANKS—CONTRACT ULTRA VIRES—AGREEMENT TO PAY CHECKS.

A national bank advised plaintiff that it would pay all checks of a third person, although such person had no funds on deposit, as was known to both plaintiff and the bank. In reliance on such promise, plaintiff cashed checks of such person, and transmitted them to the bank for payment. The bank issued and sent to plaintiff its drafts on a correspondent for the amount of the checks, which drafts were refused payment. *Held*, that the contract was one purely of guaranty, and was ultra vires on the part of the bank, and the transaction gave plaintiff no right of action against it on the drafts.

Ross, Circuit Judge, dissenting.

In Error to the Circuit Court of the United States for the Southern District of California.

Abner T. Bowen sued the Needles National Bank upon four causes of action, the first, second, and third of which were upon bills of exchange for $8,775, $8,300, and $5,364, which it was alleged in the complaint were drawn by the defendant at its place of business in the state of California upon the Chase National Bank, of New York, and payable to the order of the plaintiff under the name of A. T. Bowen & Co., which bills of exchange had been dishonored by the drawee; and for a fourth cause of action the plaintiff alleged further that the defendant was indebted to him upon a check for $3,500, drawn by Isaac E. Blake upon the defendant bank, and payable to the order of the plaintiff. Upon the issues created by the answer the cause was tried before the court without a jury, and the court found for the defendant. 87 Fed. 430. No bill of exceptions is presented in the record, but it is contended by the plaintiff in error that upon the findings of fact made by the court the judgment should have been for the plaintiff. The findings are, in substance, as follows:

(1) That the defendant executed and delivered to the plaintiff the instruments called "bills of exchange" in the first, second, and third causes of action for the several amounts following, to wit, September 10, 1894, $8,775; September 12, 1894, $8,300; September 18, 1894, $5,364; and that said bills of exchange were drawn upon the Chase National Bank, of New York.

(2) That neither at the time of the drawing of said drafts nor at the time of their receipt by the plaintiff were there funds in the hands of the drawee to pay the same; that said drafts were not presented to the drawee for acceptance or payment.

(3) That the defendant provided for the payment of said drafts by drawing counter drafts at the same time upon Isaac E. Blake, payable at said Chase National Bank; that said counter drafts were not paid, but from the prior course of dealing between plaintiff and defendant and the said Chase National Bank and the said Blake the defendant had reason to believe, and did believe, that they would be paid.

(4) That the said drafts or bills of exchange mentioned in the first finding were made and transmitted by defendant to plaintiff in exchange for checks drawn by said Blake in favor of plaintiff and upon the defendant bank; that said Blake had no funds to his credit in the defendant bank, either at the time of drawing said checks or at the time of their presentation for payment.

(5) That the plaintiff is a citizen and resident of the state of New York doing business under the name and style of A. T. Bowen & Co., and the defendant is a national banking corporation organized under the laws of the United States.

(6) That prior to April 25, 1894, the plaintiff had advanced moneys to the said Blake upon checks drawn by him upon the defendant bank, and, being unwilling to advance further sums without some guaranty from the defendant, the latter,

Digitized by Google

on said April 25, 1894, executed and delivered to the plaintiff the following telegram and letter:

"To A. T. Bowen & Co., 71 Broadway, New York: We will pay checks signed 'Isaac E. Blake, by W. L. Beardsley.' The Needles National Bank."

"A. T. Bowen & Co., New York City—Gentlemen: We hereby beg leave to confirm our telegram to you of even date: 'We will pay checks signed "Isaac E. Blake, by W. L. Beardsley,"' signed 'Needles National Bank.'

"Yours, truly, W. S. Greenlee, Cashier."

That on August 22, 1894, the said bank sent the plaintiff the following letter:

"A. T. Bowen & Co., New York City—Gentlemen: I am in receipt of telegraphic communication from Chase National Bank that our draft No. 2,200, for $7,500, payable to the order of Bowen & Co., has been refused payment until advices received from us guarantying the amount received. I immediately guarantied the amount to be $7,500.00, and I trust I have put you to no great inconvenience. It is simply a clerical error, which happens to us all some time or other, and in future we will endeavor to be more careful. I have telegraphed you to please pardon our error, and that we wish you to still continue your friendly relations with Mr. Blake and Mr. Beardsley, and that we guaranty absolutely the payment of Mr. Blake's checks as heretofore. I am truly sorry the mistake has occurred, and can venture the assurance that it will not happen again. The Keystone mine has just uncovered a large body of high-grade ore, and, if the vein continues as it is now for the next thirty days, it will make a big showing. Again asking your pardon, I remain, with best wishes,

"Very truly yours, W. S. Greenlee, Cashier."

(7) That on the 4th, 5th, 10th, and 11th days of September, 1894, respectively, upon checks drawn by the said Blake upon the defendant bank, the plaintiff advanced said Blake the following sums of money: $8,750, $8,300, $5,300, $3,500, and transmitted the checks to the defendant for payment.

(8) That in exchange for the checks for the first three sums of money the defendant transmitted to the plaintiff the bills of exchange mentioned in the first finding above, and returned to the plaintiff the fourth check, for $3,500, unpaid.

(9) That at the time of drawing said checks and at the time of their presentation to the defendant bank the said Blake had no funds whatever on deposit with the bank with which to pay the same, nor did he have any funds on deposit with the bank at the time when said letters and telegrams were sent, or at any time thereafter.

(10) That the bills of exchange mentioned in the first finding are in fact checks, and that defendant bank suffered no injury by the failure of the plaintiff to present the same to the said Chase National Bank for payment.

(11) That at the time of the drawing of said checks the plaintiff had constructive notice that the said Blake had no funds on deposit with the defendant bank to meet the same, and knew that the defendant was a national bank.

Upon these findings of fact the court found as conclusions of law that the undertaking of the Needles National Bank to guaranty the checks of Blake was ultra vires, and was void; and that the bills of exchange, having been made and executed to plaintiff under such void contract are null and void in the hands of the plaintiff, and that no cause of action can arise thereon.

John D. Works and Bradner W. Lee, for plaintiff in error.

Henry C. Dillon and Eber T. Dunning, for defendants in error.

Before GILBERT, ROSS, and MORROW, Circuit Judges.

GILBERT, Circuit Judge, after stating the facts as above, delivered the opinion of the court.

It may be stated in general that no banking corporation has the power to become a guarantor of the obligation of another, or to lend its credit to any person or corporation, unless its charter or governing statute expressly permits it. Farmers' & Mechanics' Bank v. Butch-

Digitized by Google

ers' & Drovers' Bank, 16 N. Y. 125; Morford v. Bank, 26 Barb. 568; Thomp. Corp. § 5721. Under section 5136 of the Revised Statutes, national banking associations are given the power to "make contracts" and "to exercise by its board of directors, or duly authorized officers or agents, subject to law, all such incidental powers as shall be necessary to carry on the business of banking; by discounting and negotiating promissory notes, drafts, bills of exchange, and other evidences of debt; by receiving deposits; by buying and selling exchange, coin, and bullion; by loaning money on personal security; and by obtaining, issuing, and circulating notes according to the provisions of this title." There is in these provisions no grant of power to guaranty the debt of another, nor can such guaranty be said to be incidental to the business of banking. It has been so held in Seligman v. Bank, 3 Hughes, 647, Fed. Cas. No. 12,642, Norton v. Bank, 61 N. H. 589, and Bank v. Pirie, 27 C. C. A. 171, 82 Fed. 799. An apparent exception is recognized in the case of the discount of promissory notes by national banks which may be transferred with a guaranty, but it rests upon the ground that the guaranty of such paper is but an ordinary incident to its transfer in the course of banking. In People's Bank v. National Bank, 101 U. S. 181, the court said: "To hand over with an indorsement and guaranty is one of the commonest modes of transferring the securities named." There can be no doubt that the guaranty in the present case was ultra vires. It was aside and apart from the business of banking. The case is not that of an officer of a bank exceeding the powers delegated to him. but it is a case where the banking association itself has exercised powers in excess of those which were conferred upon it by statute. The plaintiff, equally with the defendant bank, was bound to take notice of the statute. He had notice also that there were no funds in the bank to meet the checks, and he knew that the contract was one of guaranty pure and simple. The transaction cannot be deemed a certification of checks, as urged by the plaintiff in error. The checks were not certified. They did not bear the acknowledgment of the bank of funds in its possession equal in amount to the checks, and available for their payment. The certification of checks is in the line of banking business, and is not prohibited to national banks. The only prohibition is that the bank shall not certify a check unless the drawer has on deposit at the time sufficient money to meet the same. The penalty for violation of the prohibition is to render the bank liable to the forfeiture of its charter, and to have its affairs wound up. Rev. St. § 5208; Thompson v. Bank, 146 U. S. 240, 13 Sup. Ct. 66.

But the present case is complicated by the fact that the plaintiff in error relied upon the guaranty, and cashed the checks on the strength thereof. There is authority for holding that under such circumstances the bank is estopped to deny its liability on the guaranty, notwithstanding that the contract was ultra vires. Thomp. Corp. §§ 6017, 6025; State Board of Agriculture v. Citizens' St. Ry. Co., 47 Ind. 407; Insurance Co. v. McClelland, 9 Colo. 11, 9 Pac. 771; Oil Creek & A. R. R. Co. v. Pennsylvania Transp. Co., 83 Pa. St. 160. "The principle, properly understood and applied, extends to every

Digitized by Google

case where the consideration of the contract has passed to the corporation from the other contracting party, which consideration may, on well-understood principles, consist either of a benefit to the corporation or of a prejudice or disadvantage to the other contracting party. It is therefore not strictly necessary to the proper application of the principle that the corporation has received a benefit from the contract, but it is sufficient that the other party has acted on the faith of it to his disadvantage; as where he has expended money on the faith of it." Thomp. Corp. § 6017. It is contended that this doctrine finds support in the language of decisions of the supreme court, as in Hitchcock v. Galveston, 96 U. S. 341, 351, where it was said:

"But the present is not a case in which the issue of the bonds was prohibited by any statute. At most, the issue was unauthorized. At most, there was a defect of power. The promise to give bonds to the plaintiffs in payment of what they undertook to do was, therefore, at furthest, only ultra vires; and in such a case, though specific performance of an engagement to do a thing transgressive of its corporate power may not be enforced, the corporation can be held liable on its contract. Having received benefits at the expense of the other contracting party, it cannot object that it was not empowered to perform what it promised in return."

And the court quoted with approval from the opinion in State Board of Agriculture v. Citizens' St. Ry. Co., 47 Ind. 407, the following words:

"Although there may be a defect of power in the corporation to make a contract, yet, if a contract made by it is not in violation of its charter, or of any statute prohibiting it, and the corporation has, by its promise, induced a party relying on the promise, and in execution of the contract, to expend money, and perform his part thereof, the corporation is liable on the contract."

Also, in Railway Co. v. McCarthy, 96 U. S. 258, 267, where the court said:

"The doctrine of ultra vires, when invoked for or against a corporation, should not be allowed to prevail where it would defeat the ends of justice, or work a legal wrong."

While the language of these expressions of the court may be said to be sufficiently broad and inclusive to justify the contention of the plaintiff in error, the court, in its adjudications, has limited the application of the principle to cases in which a corporation has, by the plea of ultra vires, sought to retain unjustly the fruits of a contract which has been performed by the other party thereto. In all such cases the action has been maintained, not upon the contract, nor to enforce its terms, but upon an implied obligation resting upon the defendant resulting from the fact that it has received money or property which it ought either to return or make compensation for.

In Salt Lake City v. Hollister, 118 U. S. 263, 6 Sup. Ct. 1059, it was said:

"The courts have gone a long way to enable parties who had parted with property or money on the faith of such contracts to obtain justice by recovery of the property or the money specifically, or as money had and received to plaintiff's use."

In Louisiana v. Wood, 102 U. S. 294, where a city had received money for bonds issued by it without authority, the court said:

Digitized by Google

"The only contract actually entered into is the one the law implies from what was done, to wit, that the city would, on demand, return the money paid to it by mistake."

In Parkersburg v. Brown, 106 U. S. 487, 1 Sup. Ct. 442, in a similar case, the court said:

"The enforcement of such right is not in affirmance of the illegal contract, but is in disaffirmance of it, and seeks to prevent the city from retaining the benefit which it has derived from the unlawful act."

These citations sufficiently illustrate the ground, and the only ground, on which the supreme court has held that corporations may be liable to the payment of money on account of contracts which they have entered into ultra vires of their charter, and which have been performed by the other party to the contract. The right to relief in such cases rests upon the fact that the defendant corporation has obtained an advantage which it cannot justly retain. The general doctrine by which the present case may be ruled is thus stated in the language of the court in Central Transp. Co. v. Pullman's Palace-Car Co., 139 U. S. 24, 59, 11 Sup. Ct. 478, 488:

"A contract of a corporation, which is ultra vires in the proper sense,—that is to say, outside the object of its creation as defined in the law of its organization, and therefore beyond the powers conferred upon it by the legislature,—is not voidable only, but wholly void, and of no legal effect. The objection to the contract is not merely that the corporation ought not to have made it, but that it could not make it. The contract cannot be ratified by either party, because it could not have been authorized by either. No performance on either side can give the unlawful contract any validity, or be the foundation of any right of action upon it."

In the same case it was said (139 U. S. 54, 11 Sup. Ct. 486):

"It was argued in behalf of the plaintiff that, even if the contract sued on was void, because ultra vires and against public policy, yet that, having been fully performed on the part of the plaintiff, and the benefits of it received by the defendant, for the period covered by the declaration, the defendant was estopped to set up the invalidity of the contract as a defense to this action to recover the compensation agreed on for that period. But this argument, though sustained by decisions in some of the states, finds no support in the judgments of this court."

Later decisions of the supreme court have emphasized the views expressed in the foregoing quotations. Navigation Co. v. Hooper, 160 U. S. 514, 16 Sup. Ct. 379; Union Pac. Ry. Co. v. Chicago, R. I. & P. Ry. Co., 163 U. S. 564, 16 Sup. Ct. 1173; McCormick v. Bank, 165 U. S. 538, 17 Sup. Ct. 433; Bank v. Kennedy, 167 U. S. 362, 17 Sup. Ct. 831.

In Union Pac. Ry. Co. v. Chicago, R. I. & P. Ry. Co., Mr. Chief Justice Fuller said:

"A contract made by a corporation beyond the scope of its powers, express or implied, on a proper construction of its charter, cannot be enforced or rendered enforceable by the application of the doctrine of estoppel."

In McCormick v. Bank, Mr. Justice Gray, speaking for the court, said:

"The doctrine of ultra vires, by which a contract made by a corporation beyond the scope of its corporate powers is unlawful and void, and will not support an action, rests, as this court has often recognized and affirmed, upon three distinct grounds: The obligation of any one contracting with a corporation to take notice of the legal limits of its powers; the interest of the stockholders not to be subject to risks which they have never undertaken; and, above all,

Digitized by Google

the interest of the public that the corporation shall not transcend the powers conferred upon it by law."

In Bank v. Kennedy it was said:

"It would be a contradiction in terms to assert that there was a total want of power by any act to assume the liability, and yet to say that by a particular act the liability resulted. The transaction, being absolutely void, could not be confirmed or ratified."

In the case at bar the defendant bank is not in the position of having received the fruits of the unlawful contract. The plaintiff's money was paid, not to the bank, but to Blake. It is not shown that the bank received any benefit whatever from the payment. There is no ground, therefore, upon which it can be adjudged that the bank shall make restitution. The judgment will be affirmed.

ROSS, Circuit Judge (dissenting). I agree, and so held in the case of Flannagan v. Bank, 56 Fed. 959, that a national bank has not the power to guaranty the debt or obligation of a third party; but, in my opinion, the findings of fact of the court below, upon which the present writ of error must be determined, do not present any such case. The complaint in the case counts upon four separate causes of action, each of the first three of which is upon a certain draft drawn by the defendant Needles Bank on the Chase National Bank, of New York, in favor of the plaintiff, doing business under the name of Bowen & Co., and delivered to the plaintiff, according to the findings, in exchange for a check of Blake drawn on the defendant bank, and discounted by Bowen & Co. The checks of Blake on the defendant Needles Bank in favor of Bowen & Co. were thus honored by the defendant bank, and the amounts thereof necessarily entered upon its books on the debit side of Blake's account. When the plaintiff presented and delivered those checks of Blake to the defendant Needles Bank, and received from the latter, in exchange therefor, its own drafts in the plaintiff's favor on the Chase National Bank, of New York, the plaintiff manifestly parted with all of its interest in those checks of Blake, holding in exchange therefor the obligations of the defendant bank. In respect to the first three causes of action, therefore, I am unable to see how, in view of the findings of fact, it can be properly held that the action is upon any guaranty of the debt or obligation of Blake. On the contrary, in respect to each of these three causes of action the defendant bank honored the checks of Blake drawn upon it, and in exchange for them issued its own obligations, upon which the first three causes of action rest. There is nothing in the findings of fact to the effect or tending to show—what seems to be assumed in the prevailing opinion—that Bowen & Co. knew that the drafts drawn in its favor by the defendant bank, and issued in exchange for Blake's checks upon the defendant bank, were only to be paid by means of drafts drawn by the defendant bank on Blake and in favor of the Chase National Bank, of New York. It seems to me that the effect of the decision here is to attach a condition to the drafts of the defendant bank sued upon, which is altogether unauthorized by any fact made to appear in the findings of the court below. According to the complaint as it appears in the record, the fourth

Digitized by Google

cause of action is upon a check drawn by Blake "upon the plaintiff, A. T. Bowen & Co.," which, it is alleged, the defendant bank guaranteed. If the complaint in respect to this cause of action be so taken and considered, it is plain that in respect to it the action is upon a guaranty which the defendant bank was not empowered to make. But the word "upon" was probably inserted in the record by mistake in place of the words "in favor of," since the findings of fact are that this check was drawn upon the defendant bank and in favor of the plaintiff, Bowen & Co., and it is so treated in the opinion of the court below, as also in the opinion of this court. Thus considered, I am of opinion, in view of the findings of fact made by the court below, that in respect to this cause of action, also, the action is not upon any guaranty, but upon the direct promise of the defendant bank to pay the check so drawn by Blake upon it, upon the faith of which promise the plaintiff parted with his money. What I have said is based upon the findings of the court below, which, as I understand it, are to control the judgment of this court. In the opinion of the learned judge of the court below, however, reference is made to certain testimony given in the trial court tending to show that the plaintiff, Bowen & Co., did know that the drafts sued upon were to be paid by other drafts drawn by the defendant bank upon Blake in favor of the Chase National Bank, of New York, and were only to be paid in the event of Blake's paying those drafts, and that, in truth, all of the transactions in question constituted but the guaranty by the defendant bank of Blake's obligations, of which the plaintiff, Bowen & Co., had actual knowledge. The testimony thus alluded to in the opinion of the trial judge finds some support in the agreement executed by Blake on the 12th of September, 1894, which is set out in the findings of fact that were made by the court below. The evidence in the case may have been amply sufficient to justify findings to the effect that all of the transactions sued upon in reality constituted but the guaranty on the part of the defendant bank of the obligations of Blake, and that the plaintiff, Bowen & Co., had knowledge thereof. The difficulty is that the findings do not show this state of facts, and therefore I am of opinion that the judgment should be reversed, and the cause remanded for a new trial.

(94 Fed. 932.)

NORTHERN PAC. RY. CO. v. McCORMICK.

(Circuit Court of Appeals, Ninth Circuit. May 22, 1899.)

No. 496.

1. PUBLIC LANDS—NORTHERN PACIFIC RAILROAD GRANT—PRE-EMPTION RIGHTS.
   The provision of section 6 of the Northern Pacific Railroad grant, that "the odd sections of land hereby granted" should not be liable to sale, or entry or pre-emption before or after their survey, except by the company, must be construed in connection with section 3, containing the grant, and which limited the same to lands to which the United States should "have full title * * * free from pre-emption or other claims or rights at the time the lien of said road is definitely fixed and

Digitized by Google

the plat thereof filed." Hence lands to which pre-emption rights had attached at any time prior to the filing of the map of definite location, being reserved from the grant, were not within the provisions of section 6, and up to that time the right of pre-emption was not affected by anything in the act, or by the filing of the map of general route thereunder.

2. SAME—PRE-EMPTION RIGHTS—SETTLER ON UNSURVEYED LAND.

A qualified settler, who enters upon and improves unsurveyed public land, with the intention of obtaining title thereto under the pre-emption laws, has a claim thereon, which is a right of pre-emption, and which continues until three months after the map of survey of the land has been filed in the land office, unless his entry is sooner made; and where a settler was so occupying and residing upon a tract of unsurveyed land at the time of the filing of the map of definite location of the line of the Northern Pacific Railroad, which brought the land within the boundaries of its grant, although the settler had made no application for entry, such land was at that time subject to a "pre-emption claim or right," within the meaning of the reservation clause of the act making such grant, and the company acquired no title thereto.

Gilbert, Circuit Judge, dissenting.

In Error to the Circuit Court of the United States for the District of Montana.

This is an action of ejectment brought in the circuit court of the United States for the district of Montana by the plaintiff in error against the defendant in error to recover possession of the S. ½ of the N. W. ¼ and the W. ½ of the S. W. ¼ of section 21, township 13 N., range 18 W., principal meridian of Montana. It is alleged in the complaint that the plaintiff is a corporation created by, and organized and existing under, the act of congress approved July 2, 1864, entitled "An act granting lands to aid in the construction of a railroad and telegraph line from Lake Superior to Puget Sound, on the Pacific Coast, by the northern route," and acts and resolutions amendatory thereof; that by the terms of said act plaintiff was authorized and empowered to lay out, locate, construct, furnish, and maintain a continuous railroad and telegraph line, with the appurtenances, from a point on Lake Superior to a point on Puget Sound; that there was granted to plaintiff by congress every alternate section of public land, not mineral, designated by odd numbers, to the amount of 20 alternate sections per mile on each side of said railroad line, as plaintiff might adopt, through the territories of the United States, and 10 alternate sections of land per mile on each side of said railroad whenever it passed through any state, and whenever on the line thereof the United States had full title, not reserved, sold, granted, or otherwise appropriated, and free from pre-emption or other claims or rights, at the time the line of said road should be definitely fixed, and a plat thereof filed in the office of the commissioner of the general land office; that it was provided in section 6 of the said act that the president of the United States should cause the lands to be surveyed for 40 miles in width on both sides of the entire line of the road after the general route thereof was fixed, and as fast as should be required by the construction of said railroad, and that the odd sections of land thereby granted should not be liable to sale or entry or pre-emption before or after they were surveyed, except by plaintiff, as provided in said act; that plaintiff duly accepted the terms, conditions, and impositions of the act, and signified such acceptance in writing to the president of the United States; that the general route of said railroad extending through the territory of Montana was duly fixed February 21, 1872, and that the land in controversy was on and within 40 miles of the general route of said railroad so fixed as aforesaid; that on July 6, 1882, plaintiff definitely fixed the line of said road, extending opposite to and past said lands, and filed a plat thereof in the office of the commissioner of the general land office; that thereafter plaintiff duly constructed and completed that portion of said railroad and telegraph line extending on, over, and along the line of definite location of said railroad, so fixed as aforesaid, and the same was accepted by the president of the United States. It is further alleged

Digitized by Google

that at the date of the definite location of said road, and of the filing of a plat thereof in the office of the commissioner of the general land office on July 6, 1882, the land was public land, to which the United States had full title, not reserved, sold, or granted, or otherwise appropriated, and free from pre-emption or other claims or rights. The material part of the amended answer is the denial of this last allegation, and the averment that on or about the —— day of January, 1864, one W. B. S. Higgins, being at that time a citizen of the United States over the age of 21 years, and duly qualified under the laws of the United States to make a pre-emption or homestead filing, entered into and upon the land in question, which was at that time unsurveyed, and a part of the unoccupied and unappropriated public domain of the United States; that Higgins entered upon the land for the purpose of making a home for himself, and proceeded to erect improvements upon the land, and to inclose a portion thereof with a fence; that thereafter he continued to occupy, hold, and possess the same until he sold, transferred, and assigned his interests to other parties; that through mesne conveyances the defendant herein on or about the 6th day of January, 1881, became the owner and possessor of said tract of land; that between the 1st day of July, 1862, and the date of the commencement of this action, the said land was owned, held, possessed, and occupied continuously by persons who, under the laws of the United States, were entitled to enter the same either as a homestead or pre-emption entry; that on or about the 23d day of March, 1885, the land was surveyed by the surveyor general of the state of Montana, and the survey accepted by the officers of the land department of the United States; that on or about the 25th day of March, 1885, defendant filed his declaratory statement; that on or about the 6th day of January, 1881, he settled upon said tract of land, having become the possessor thereof by purchase from the prior occupant; that thereafter he applied to the officers of the land office at Helena, Mont., to file his pre-emption on said tract of land; that the plaintiff appeared by its attorneys and agents, and contested the right of the defendant to enter the land; that the register and receiver, after hearing proof, decided that the defendant was entitled to enter the land, and that the plaintiff had no right, title, or interest therein; that thereupon the plaintiff appealed from such decision to the commissioner of the general land office, who approved the decision, and thereafter the plaintiff appealed to the secretary of the interior, who affirmed the decision of the commissioner of the land office, and decided that the defendant was entitled to hold and possess said land under the laws of the United States, and that the plaintiff had no right, title, interest, claim, or demand whatsoever in or to said lands, or any part or parcel thereof; that on the 1st day of May, 1889, the defendant filed his second declaratory statement in the land office at Helena, Mont., for the land in controversy; that this declaratory statement was accepted by the officers of the land office, and thereafter he changed it to a homestead entry, and paid the register and receiver the necessary fees therefor; that about January 1, 1891, he made application to the land office to make final proof, and, after advertisement and notice published in a newspaper, he appeared with his witnesses before the clerk of the district court for the Fourth judicial district of Montana, and proved his title to the land, and, upon presenting such proof to the register and receiver of the land office, it was accepted by them, and they issued to him a certificate showing that he was entitled to the land; that at the time of making final proof the plaintiff made no objection thereto, but allowed it to be made without protest or objection; that the proof was accepted by the commissioner of the general land office, and on the 16th day of November, 1891, the president of the United States issued to him a patent for the land, and by reason of said patent, and compliance with the laws of the United States, he is the owner and entitled to the possession of said land. To this answer the plaintiff filed a replication placing in issue substantially all the foregoing averments, except such as relate to the proceedings in the land office and the issuance of the patent. The defendant thereupon moved for a judgment upon the pleadings, upon the theory that the uncontroverted averments of the answer as to the issuance of the patent were sufficient to entitle him to a judgment. The court granted the motion. Plaintiff thereupon brought the

Digitized by Google

case to this court by a writ of error. Railroad Co. v. McCormick, 19 C. C. A. 165, 72 Fed. 736. This court held that the allegations of the answer denied by the replication must be excluded from consideration in determining the issues presented by the pleadings at the time the judgment was entered in the court below, and that, as the pleadings thus stood, all the facts essential to the establishment of the plaintiff's title were alleged and were undisputed, save only as they were affected by the proceedings in the land office which resulted in the issuance of the patent to the defendant, and, as these proceedings were based upon an entry by the defendant made long after the title passed to the railroad company, the allegations of the answer were insufficient to sustain the judgment. The cause was accordingly remanded to the circuit court for trial upon the undetermined issues contained in the pleadings. Pursuant to this order the parties agreed upon the facts in the case, and upon such agreed facts the case was submitted to the circuit court, and a judgment was again entered in favor of the defendant. The facts agreed upon are all the facts set forth in the complaint, except the allegations "that said land was on said February 21, 1872, public land, to which the United States had full title, not reserved, sold, granted, or otherwise appropriated, and free from pre-emption or other claims or right," unless the other facts agreed upon established the same, and also except the formal conclusions as to plaintiff's ownership of the land.

The material facts, as agreed upon and not previously admitted by the pleadings, are the allegations of the answer excluded from consideration at the former hearing of the case by reason of the denials in the replication. They are that at the time of the grant to the said plaintiff, and for some time prior thereto, said Higgins settled upon and occupied said land, placed improvements thereon to the amount of about $2,000, fenced a considerable portion thereof, and had raised crops of grain, oats, and wheat, and also vegetables, thereon, and was at the date of said grant a settler thereon, and an occupant duly qualified to enter said land and obtain a patent therefor; that said Higgins continued so to occupy and possess said land under his settlement thereon until some time in the year 1875, when he died, and the administrator of his estate duly sold all the right he could sell to the same and improvements thereon to one William S. Gullett, who, under his conveyance, at once took possession and occupancy of the same, and cultivated and improved the same up to May 1, 1880; that in May, 1880, said William S. Gullett sold and conveyed to defendant all the claim, right, title, and interest in said land had and held by him, and the improvements thereon, and the said defendant entered into the immediate possession and occupation thereof, settled upon and continuously farmed and improved the same, with the intention of entering and obtaining a title thereto, if so entitled under the laws of the United States; that said land was unsurveyed during all the time aforesaid, and the official survey thereof was not made until the year 1885, and the township plats were not filed until March 23, 1885; that defendant made his application to enter said land and file the necessary papers for that purpose on the 25th day of March, 1885, for the purpose of acquiring title thereto, and filed his declaratory statement in due form of law on the said 25th day of March, 1885; that a hearing of the said application to enter the same was duly ordered by the officers of the land office at Helena, Mont., and due notice of said hearing and the taking of testimony therein given to plaintiff; that plaintiff failed and neglected to appear at the taking of said testimony, and the officers of the land office at said city of Helena found in favor of the defendant; that thereupon plaintiff appealed to the commissioner of the general land office; that said commissioner decided adversely to plaintiff, and the decision of the Helena land office was thereupon affirmed; that plaintiff thereafter appealed from the decision of the said commissioner to the secretary of the interior, who confirmed the said decision; that defendant paid for said land, received a receiver's certificate therefor, and a patent was thereupon issued to him, and the same now remains in full force and effect, subject to whatever legal title plaintiff may have on account of its grant and the facts herein agreed upon; that all of the said persons, and said Higgins, the said Gullett, and the defendant, McCormick, were citizens of the United States, and duly qualified to enter said

Digitized by Google

lands under the laws of the United States, and to receive a United States patent therefor; and that said McCormick was in the occupation and possession of said premises at the time of the location of the definite line of plaintiff's railroad, and the filing of the plat thereof in pursuance of the statutes of the United States in such case provided, and said facts were presented and passed upon by the officers of the land department.

C. W. Bunn, James B. Kerr, E. W. Beattie, Jr., William Wallace, Jr., William Singer, Jr., and H. G. McIntire, for plaintiff in error.

E. W. Toole and Thomas C. Bach, for defendant in error.

Before GILBERT and MORROW, Circuit Judges, and HAWLEY, District Judge.

MORROW, Circuit Judge, after the foregoing statements of facts, delivered the opinion of the court.

The assignments of error upon which the case is now here are ten in number, but they may all be reduced to two general propositions: (1) That the court erred in holding that the land described in the complaint was subject to homestead and pre-emption entry after the general route of the Northern Pacific Railroad was fixed on February 21, 1872; (2) that the court erred in holding that the land in controversy was subject to any claim or right on the part of the defendant on and after July 6, 1882, when the line of definite location of the road was fixed, and a plat thereof filed in the office of the commissioner of the general land office.

The act of July 2, 1864, entitled "An act granting lands to aid in the construction of a railroad and telegraph line from Lake Superior to Puget Sound, on the Pacific Coast, by the northern route" (13 Stat. 365), provided in section 3:

"That there be, and hereby is, granted to the 'Northern Pacific Railroad Company,' its successors and assigns, * * * every alternate section of public land, not mineral, designated by odd numbers, to the amount of twenty alternate sections per mile, on each side of said railroad line as said company may adopt, through the territories of the United States, and ten alternate sections of land per mile on each side of said railroad whenever it passes through any state, and whenever on the line thereof, the United States have full title, not reserved, sold, granted or otherwise appropriated, and free from pre-emption, or other claims or rights, at the time the line of said road is definitely fixed and a plat thereof filed in the office of the commissioner of the general land office; and whenever, prior to said time, any of said sections or parts of sections shall have been granted, sold, reserved, occupied by homestead settlers or pre-empted or otherwise disposed of, other lands shall be selected by said company in lieu thereof, under the direction of the secretary of the interior, in alternate sections, and designated by odd numbers, not more than ten miles beyond the limits of said alternate sections."

The sixth section directed the lands to be surveyed for 40 miles in width on both sides of the entire line of the road after the general route was fixed, and as fast as was required by the construction of the railroad, and provided that:

"The odd sections of land hereby granted shall not be liable to sale, or entry, or pre-emption, before or after they are surveyed, except by said company, as provided in this act; but the provisions of the act of September, eighteen hundred and forty-one, granting pre-emption rights, and the acts amendatory thereof and of the act entitled 'An act to secure homesteads to actual settlers on the public domain,' approved May twenty, eighteen hundred and sixty-two, shall be, and the same are hereby, extended to all other lands on the line of said road,

Digitized by Google

when surveyed, excepting those hereby granted to said company. And the reserved alternate sections shall not be sold by the government at a price less than two dollars and fifty cents per acre, when offered for sale."

The plaintiff in error contends that when the general route of the railroad was fixed on February 21, 1872, the land in dispute, being part of an odd-numbered section within the exterior limits of the grant, as determined by such general route, was withdrawn from sale, homestead, and pre-emption entry, under the provisions of section 6 of the granting act. It is perhaps immaterial that there is no evidence in this record that the land department at any time withdrew from sale or location, pre-emption or homestead entry, any of the public lands falling within the limits of the grant, or that a map of the lands withdrawn was ever filed with the commissioner of the general land office. Whatever withdrawal or reservation was made could only have been made under the provisions of the statute. We must therefore look to the terms of the act itself to ascertain what lands were granted to the railroad company, and declared not to be liable to sale or entry, pre-emption or homestead entry. In section 6 of the act it is provided that they are the "odd sections of land hereby granted." This clearly does not mean all sections of land designated by odd numbers within the limits of the grant, but only such sections as are granted by the act to the railroad company. Besides, this section is not to be construed without reference to other sections of the act. "It must be taken in connection with section 3, which manifestly contemplated that rights of pre-emption, or other claims or rights, might accrue or become attached to the lands granted after the general route of the road was fixed, and before the line of definite location was established." Railroad Co. v. Sanders, 166 U. S. 620, 636, 17 Sup. Ct. 676. The terms of the grant are contained in section 3, where it is provided that the land granted is every alternate section of public land, not mineral, designated by odd numbers, within the limits of the grant, "whenever on the line thereof the United States have full title, not reserved, sold, granted, or otherwise appropriated, and free from pre-emption or other claims or rights at the time the line of said road is definitely fixed and a plat thereof filed in the office of the commissioner of the general land office." It needs no argument to show that the lands here described as excepted from the operation of the grant at the time the line of the road should be definitely fixed were never at any time granted to the railroad company, and, being expressly withheld, were as free from the terms of the grant when the general route of the road was fixed on February 21, 1872, as though they had never been within its limits. Like mineral lands, they were expressly excluded from the operation of the act.

It follows, that the first, and, indeed, the only, question to be determined is this: Was the land in controversy free from pre-emption or other claim or right on the 6th day of July, 1882? If it was, it was part of the grant to the railroad company. If it was not, the company never had title to the land, and cannot prevail in this action. In an action of ejectment, the plaintiff must recover, if at all, upon the strength of his own title, and not upon the weakness

Digitized by Google

of the title claimed by his adversary. Fussell v. Gregg, 113 U. S. 550, 565, 5 Sup. Ct. 639.

It appears that the defendant entered upon this land in May, 1880, as a purchaser of the possession and improvements from the previous owner, and thereafter continuously farmed and improved the same with the intention of entering and obtaining a title thereto, if so entitled under the laws of the United States. He was therefore a settler upon this land at the time the line of the road was definitely fixed, and a plat thereof filed in the office of the commissioner of the general land office, on July 6, 1882. Was this settlement, under the circumstances, a "claim or right" excluding the land from the grant to the railroad? The land was at that time unsurveyed, and was not surveyed until the year 1885, and the official plat was not filed in the land office until March 23, 1885. Two days thereafter, namely, on March 25, 1885, the defendant made his application to enter the land as a pre-emptor, and thereupon filed the necessary papers for that purpose. Section 6 of the act of July 6, 1864, after providing for the survey of the lands on both sides of the Northern Pacific Railroad, provided that the odd sections granted should not be liable to sale or entry or pre-emption before or after they were surveyed, except by said company, as provided in the act. It was further provided that:

"The provisions of the act of September fourth, eighteen hundred and forty-one, granting pre-emption rights, and the acts amendatory thereof, and the act entitled 'An act to secure homesteads to actual settlers on the public domain,' approved May twenty, eighteen hundred and sixty-two, shall be, and the same are hereby extended to all other lands on the line of said road when surveyed, excepting those hereby granted to said company."

This provision of the act extending the pre-emption and homestead laws to all other lands on the line of the road not granted to the company is significant, in view of the fact that these laws had already been extended to all lands belonging to the United States to which the Indian title had been, or might thereafter be, extinguished. Act June 2, 1862 (12 Stat. 413), and Act May 20, 1862 (12 Stat. 392). The only inference to be drawn from this provision is that these laws were to be continued in full force and effect, notwithstanding the grant, and to be applicable to all lands not specifically therein described as having been granted to the company. In the case of Leavenworth, L. & G. R. Co. v. U. S., 92 U. S. 733, 748, the supreme court, in speaking of a grant of land made in 1863 to the state of Kansas, declared the policy of congress at that date to have been to preserve pre-emption and homestead rights until the line of the aided road should be definitely fixed. The court said:

"Formerly, lands which would probably be affected by a grant were, as soon as it was made, if not in advance of it, withdrawn from market. But experience proved that this practice retarded the settlement of the country, and at the date of this act the rule was not to withdraw them until the road should be actually located. In this way, the ordinary working of the land system was not disturbed. Private entries, pre-emption and homestead settlements, and reservations for special uses, continued within the supposed limits of the grant, the same as if it had not been made. But they ceased when the routes of the roads were definitely fixed, and if it then appeared that a part of the lands within those limits had been either sold at private entry, taken up by pre-emp-

Digitized by Google

tors, or reserved by the United States, an equivalent was provided. The companies were allowed to select, under the direction of the secretary of the interior, in lieu of the lands disposed of in either of these ways, an equal number of odd sections nearest to those granted, and within twenty miles of the line of the road. Having thus given lands in place and by way of indemnity, congress expressly declared what the act had already implied,—that lands otherwise appropriated when it was passed were not subject to it."

These observations of the court are peculiarly applicable to the grant to the Northern Pacific Company, and in the case of Northern Pac. R. Co. v. Musser-Sauntry, L. L. & Mfg. Co., 168 U. S. 604, 610, 18 Sup. Ct. 207, this feature of the law is given as a reason why promptness on the part of the company in building its road would result to its advantage, in finding nearly all its grant within place limits. The court said:

"At the time of the passage of the act of 1864 only in the vicinity of the proposed eastern and western termini were there any settlements. The great bulk of the territory through which the road was to pass was almost entirely unoccupied. Congress, fixing the time for commencing and for finishing the work within two and twelve years, respectively (section 8), contemplated promptness in the construction of the road, intending thereby to open this large unoccupied territory to settlement. In view of the road's traversing a comparative wilderness, it made a grant of enormous extent. Within the unoccupied territory thus to be traversed there were few settlers, and few, if any, land grants. It knew, therefore, that if the company proceeded promptly, as required, it would find within its place limits nearly the full amount of its grant."

What, then, was the effect of the settlement by the defendant upon the land in question, under the pre-emption laws? In Whitney v. Taylor, 158 U. S. 85, 94, 15 Sup. Ct. 800, the supreme court held that the act of September 4, 1841, "gave the right of pre-emption to one making a settlement in person, and who inhabits and improves the land, and erects a dwelling thereon." The various provisions of the pre-emption act are now embraced in the Revised Statutes, and that part of section 10 which declares who are competent pre-emptors on the public lands, and what constitutes a pre-emption claim, is found in section 2259, as follows:

"Every person, being the head of a family, or widow, or single person, over the age of twenty-one years, and a citizen of the United States, or having filed a declaration of intention to become such, as required by the naturalization laws, who has made, or hereafter makes, a settlement in person on the public lands subject to pre-emption, and who inhabits and improves the same, and who has erected or shall erect a dwelling thereon, is authorized to enter with the register of the land-office for the district in which such land lies, by legal subdivisions, any number of acres not exceeding one hundred and sixty, or a quarter-section of land, to include the residence of such claimant, upon paying to the United States the minimum price of such land."

Then follow sections in the Revised Statutes limiting the right of pre-emption, and providing the proof and the method of procedure in the land office by which that right may be established. And, where a settlement is made on unsurveyed land, the time after the survey within which the declaratory statement must be filed is prescribed in section 2266, as follows:

"In regard to settlements which are authorized upon unsurveyed lands, the pre-emptions claimant shall be in all cases required to file his declaratory statement within three months from the date of the receipt at the district land-office of the approved plat of the township embracing such pre-emption settlement."

Digitized by Google

These provisions of the statute distinctly recognize that the qualified settler who enters upon and improves a tract of public land with the intention of obtaining a title thereto under the pre-emption laws is a claimant, that he has a claim to the land, and that this claim is a right of pre-emption. This being so, it would seem that this was one of the "claims" congress had in view when it provided that the odd-numbered sections granted to the railroad company should be free from "other claims or rights" when the definite line of the road should be fixed. Had the defendant perfected his entry of record and filed his declaratory statement in the land office prior to that time, he could then have had a pre-emption claim, and the land would not have been free from such claim. But congress went further, and limited the grant to lands "free from claims." As said by the supreme court in Northern Pac. R. Co. v. Musser-Sauntry L. L. & Mfg. Co., supra:

"No one can read this entire description without being impressed with the fact that congress meant that only such lands should pass to the Northern Pacific as were public lands, in the fullest sense of the term, and free from all reservations and appropriations, and all rights or claims in behalf of any individual or corporation, at the time of the definite location of its road."

But we are not without direct authority upon this question. In Railroad Co. v. Sanders, 166 U. S. 620, 17 Sup. Ct. 671, this same grant was before the court. After the general route of the road was fixed, February 21, 1872, and prior to the establishment of its line of definite location, July 6, 1882, certain persons, qualified to enter mineral lands under the laws of the United States, entered upon the possession of lands within the exterior lines of both the general and definite routes of the railroad, and made claim to such lands. These claims were pending when the definite line of the road was fixed. The defendants, who subsequently entered into the possession of the land, did not assert title in themselves, but resisted the claim of the railroad company upon the ground that the land was excluded from its grant by reason of the fact that there were claims to the land at the time of the location of the road. The claims consisted, as stated, in the application of certain parties to purchase the land as mineral land. The land was not in fact mineral land, and it does not appear what became of the applications. They were presented merely as claims, without any other fact or circumstance tending to establish their connection with any right of title, and did not in any way relate to the defendants' right of possession of the land. The court, in commenting upon this feature of the case, said:

"But it is said that no account is to be taken of those applications, for the reason that the present defendants, who had nothing to do with them, and had no interest in them, confess in their answer that the lands in question 'did not contain gold or other precious metals in paying quantities, or in such quantity as to make the same, or any part thereof, commercially valuable therefor'; that the lands are therefore to be regarded as agricultural lands that passed to the company under the act of 1864, and were preserved to it by the filing of the map of the general route in 1872, and by their withdrawal in that year by the general land office 'from sale or location, pre-emption or homestead entry.' This view overlooks the fact that the express declaration of congress was that no public lands should pass to the company, to which, at the time of the defi-

Digitized by Google

nite location of the road, the United States did not have title free from pre-emption 'or other claims or rights.' If the applications made in 1880 and 1881 to purchase different parts of the section in question, and which were pending and undisposed of in 1882, when the company filed its map of definite location, constituted 'claims,' within the meaning of the act of 1864, then it was not competent for the defendants, by any admission they might make, for whatever purpose made, as to the quality of these lands,—whether mineral or not,—to eliminate from the case the essential fact that these 'claims' existed of record when the line of the road was definitely located. Indeed, if it now appeared that the land office finally adjudged, after the definite location of the road, that the lands embraced by those applications were not mineral, they could not be held to have passed to the railroad company under the act of 1864, for the reason that they were not, at the time of such definite location, free from pre-emption or 'other claims or rights.' "

In another part of the opinion the court says:

"As the lands in question were not free from those claims at the time the plaintiff definitely located its line of road, it is of no consequence what disposition was or has been made of the claims subsequent to that date."

The court accordingly held that the lands did not pass to the railroad company by the terms of its grant, for the reason that claims to the land were pending at the time of the definite location of the road.

The only distinction to be drawn between this case and the one at bar is the fact that, in the case referred to, the applications to purchase the land as mineral land were on file in the land office when the line of definite location of the road was fixed, while in the present case, although the defendant had settled upon the land, he had not at that time filed his declaratory statement; but, as we have seen, this was not necessary under the statute, for the reason that the land was unsurveyed public land. As soon as it had been surveyed, and the plat of the township embracing the settlement was received at the district land office, the defendant filed his declaratory statement, as required by section 2266 of the Revised Statutes. What more could he do? He had not only settled upon the land before the line of the railroad was definitely fixed, but he continued to occupy, cultivate, and improve the land until his claim was established by law, and a patent issued to him thereon, on the 16th day of November, 1891. The action of the land department in issuing a patent to the defendant may be of itself immaterial in this case, but, in the proceedings in the land office resulting in the patent being issued, the fact of settlement upon the land by the defendant as a qualified settler under the law was found, and found by competent authority. It was also found that whatever right or claim the defendant had was based upon this settlement. In other words, the pivotal fact was established that a claim to this land, whatever that claim might be in law, existed on July 6, 1882. Catholic Bishop of Nesqually v. Gibbon, 158 U. S. 155, 166, 15 Sup. Ct. 779.

In Railroad Co. v. Colburn, 164 U. S. 383, 17 Sup. Ct. 98, the court declared the law to be that no pre-emption or homestead claim attaches to a tract of land until an entry in the local land office, and the plaintiff in error relies upon this case as excluding defendant's claim. But the facts in that case did not require the court to deter-

Digitized by Google

mine the effect of a settlement upon public land by a qualified settler, followed by a pre-emption entry within the time prescribed by law; and the court expressly stated that it deemed it unwise to make any observations concerning matters not considered by the supreme court of the state from which the case had been taken upon a writ of error. The case of Railroad Co. v. Groeck, 31 C. C. A. 334, 87 Fed. 970, recently decided by this court, is also relied upon by the plaintiff in error as establishing the doctrine that the lands in question were withdrawn by the operation of section 6 when the general route of the road was fixed, February 21, 1872, and were thereafter excepted from homestead and pre-emption entry. The act involved in that case was the act of July 27, 1866, granting lands to aid in the construction of the Atlantic & Pacific and the Southern Pacific Railroads. 14 Stat. 292. Section 6 of that act is identical with section 6 of the act granting lands to the Northern Pacific, but section 3 of the former act differs very materially from the latter act, in fixing the time when the grant of specific lands should attach. It provides that there is granted every alternate section of public land, not mineral, designated by odd numbers, wherever on the line of the road the United States have full title, not reserved, sold, granted, or otherwise appropriated, and free from pre-emption or other claims or rights, "at the time the line of said road is designated by a plat thereof filed in the office of the commissioner of the general land office." This plat was filed January 3, 1867, and under the terms of the act the grant at that time attached to the odd-numbered sections not subject to the reservations, claims, and rights mentioned in the act. The defendant, Groeck, did not settle upon the land claimed by him until September 2, 1885, or more than 17 years after the right of the railroad to specific sections had been fixed by law. His pre-emption entry was, however, accepted by the land department, and a patent for the land issued to him, because the withdrawal of the land from settlement by the secretary of the interior for the benefit of the railroad had been revoked on August 15, 1887. This court held that the granting act itself operated to withdraw from settlement the lands lying within the limits of the grant from the date of the filing of the map of the general route, and this determination was in accordance with the express terms of the act. Manifestly, the law of that case has no bearing upon the case now before the court. The sections of the act we have had under consideration differ very materially from the provisions of other acts granting lands in aid of public improvements, and decisions in cases based upon such different provisions cannot be followed as authority in this case, without noticing the distinction; and, as the views here expressed are believed to be entirely in accord with the latest decisions of the supreme court upon the questions involved, it is not deemed necessary to discuss the other cases cited in the briefs.

It follows from what has been said that we are of the opinion the land in controversy was subject to homestead and pre-emption entry after the general route of the Northern Pacific Railroad was fixed, on February 21, 1872, and that it was not free from the claim of the defendant when the line of the road was definitely fixed, on

Digitized by Google

July 6, 1882. The latter determination necessarily disposes of the case. The judgment of the court below will be affirmed.

GILBERT, Circuit Judge (dissenting). I am unable to concur in the view that the supreme court has by its decisions in Railroad Co. v. Sanders, 166 U. S. 620, 17 Sup. Ct. 671, and Northern Pac. R. Co. v. Musser-Sauntry L. L. & Mfg. Co., 168 U. S. 604, 18 Sup. Ct. 205, overruled a series of prior decisions in which it was uniformly held that the withdrawal of lands within the grant to the Northern Pacific Railroad Company upon the filing of its map of the general route of its road operated to exclude the withdrawn lands from subsequent settlement by individuals under the homestead and pre-emption laws. That such was the effect of the withdrawal has been distinctly and repeatedly announced. In Buttz v. Railroad Co., 119 U. S. 55, 7 Sup. Ct. 100, referring to the grant to the Northern Pacific Railroad Company, the court said:

"But it also contemplates a preliminary designation of the general route of the road, and the exclusion from sale, entry, or pre-emption of the adjoining odd sections within forty miles on each side, until the definite location is made. * * * When the general route of the road is thus fixed in good faith, and information thereof given to the land department by filing the map thereof with the commissioner of the general land office, or the secretary of the interior, the law withdraws from sale or pre-emption the odd sections to the extent of forty miles on each side. The object of the law in this particular is plain: It is to preserve the land for the company to which, in aid of the construction of the road, it is granted."

In that case a settler had upon October 5, 1871, entered upon land, with the intention of securing a pre-emption claim. The land was then within the limits of an Indian reservation, the Indian title to which was not extinguished until June 19, 1873. On August 11, 1873, and within three months after the government survey of the land, the pre-emptioner presented his declaratory statement. On February 21, 1872, the map of the general route of the road had been filed, and on March 30, 1872, the withdrawal was made. Speaking of notice of the withdrawal, the court said:

"This notification did not add to the force of the act itself, but it gave notice to all parties seeking to make a pre-emption settlement that lands within certain defined limits might be appropriated for the road. At that time the lands were subject to the Indian title. The defendant could not, therefore, as already stated, have then initiated any pre-emption right by his settlement, and the law cut him off from any subsequent pre-emption. The withdrawal of the odd sections mentioned from sale or pre-emption, by the sixth section of the act, after the general route of the road was fixed, in the manner stated, was never annulled. It follows that the defendant could never afterwards acquire any rights against the company by his settlement."

In St. Paul & P. R. Co. v. Northern Pac. R. Co., 139 U. S. 1, 11 Sup. Ct. 389, concerning the withdrawal of lands by the secretary of the interior, the court said:

"His action in formally announcing their withdrawal was only giving publicity to what the law itself declared. The object of the withdrawal was to preserve the land unincumbered until the completion and acceptance of the road. * * * After such withdrawal, no interest in the lands granted can be acquired, against the rights of the company, except by special legislative declaration, nor, indeed, in the absence of its announcement, after the general route is fixed."

Digitized by Google

In U. S. v. Southern Pac. R. Co., 146 U. S. 570, 599, 13 Sup. Ct. 152, the court expressly approved the language above quoted from the opinion in Buttz v. Railroad Co. In Hamblin v. Land Co., 147 U. S. 531, 13 Sup. Ct. 353, it was held that a withdrawal of lands as coming within the limits of a railroad grant operates to withdraw the lands from homestead entries, even if found afterwards not to come within such limits. In Maddox v. Burnham, 156 U. S. 544, 15 Sup. Ct. 448, it was held that the mere occupation of public land for the purpose of subsequently entering the same for a homestead, but without making such entry until after a withdrawal had been ordered by the secretary of the interior, gave the occupant no right thereafter to obtain title under the homestead laws.

The case of Railroad Co. v. Sanders, it is said, declares a doctrine at variance with the former decisions of the court. What was actually decided by the court in that case was that the withdrawal of lands consequent upon fixing the general route of the road did not operate to withdraw mineral land, and that if at the time of fixing the definite location of the road there was pending an application to purchase any of the granted lands, upon the ground that it was mineral land, such application constituted a "claim" against the land which excluded it from the grant, notwithstanding the fact that it was subsequently proven that the land was not in fact mineral land. That decision rests upon grounds which have no application in the present case. All mineral lands were withheld from the grant to the railroad company. The withdrawal could not affect lands not within the grant. Such lands, after withdrawal, as before, were open to claim and purchase as mineral lands. The difference between an application to purchase mineral lands, and a pre-emption entry after a withdrawal, is that in the one case the law authorized and invited the application to purchase, while in the other it strictly prohibited all steps towards obtaining title, and declared that such unauthorized settlement could not become the basis of a claim. It is true that in the course of the opinion in the Sanders Case the court remarked that section 3 of the grant to the railroad company "manifestly contemplated that rights of pre-emption or other claims and rights might accrue or become attached to the lands granted after the general route of the road was fixed, and before the line of definite location was established," but the case presented no question of pre-emption right. It is not conceivable that the court intended by the use of those words in the opinion to deliberately overrule the plain doctrine of its decisions in the cases above referred to. I think that the language so quoted must be considered only in its connection with the question which was then before the court for decision. In Northern Pac. R. Co. v. Musser-Sauntry L. L. & Mfg. Co., the court, in concluding its opinion, declared that the only point intended to be decided was "that when a withdrawal of lands within indemnity limits is made in aid of an earlier land grant, and made prior to the filing of the map of definite location by a company having a later grant,—the latter having such words of exception and limitation as are found

Digitized by Google

in the grant to the plaintiff,—it operates to except the withdrawn lands from the scope of such later grant." The court ruled in that case, as it had ruled before, that the grant of lands to the Northern Pacific Railroad Company under the third section of the grant conveyed, so far as the United States were concerned, only the lands within the grant to which the United States should have "full title, not reserved, sold, granted or otherwise appropriated, and free from pre-emption, or other claims or rights, at the time the line of said road is definitely fixed, and a plat thereof filed in the office of the commissioner of the general land office," and that the United States retained the right at any time prior to the date of fixing such definite line to make a legislative grant of the lands in aid of another railroad, or for any other purpose; but the court, in its opinion in that case, again defined the office and function of a withdrawal, and said:

"The withdrawal by the secretary in aid of the grant to the state of Wisconsin was valid, and operated to withdraw the odd-numbered sections within its limits from disposal by the land officers of the government under the general land laws. The act of the secretary was, in effect, a reservation."

Conceding that the decision in that case reaffirms the doctrine that congress might by legislation retract from the grant any of the odd-numbered sections within the limits thereof, and might, even after the general route was fixed and the lands were withdrawn, have offered the same to settlers under the pre-emption and homestead laws, the fact remains that no such action has been had, and no such legislation has been enacted. In section 6 of the granting act to the Northern Pacific Railroad Company, after granting the odd-numbered sections, it is expressly declared that the pre-emption and homestead laws shall be extended to the other lands. No subsequent legislation has indicated the purpose of congress to extend those laws to lands within the grant, other than those so indicated. In Menotti v. Dillon, 167 U. S. 703, 17 Sup. Ct. 945, the court made a similar ruling in reference to the grant to the Central Pacific Railroad Company. The court said:

"The right it acquired, in virtue of the act making the grant and of the accepted map of its general route, was to earn such of the lands, within the exterior lines of that route, as were not sold, reserved, or disposed of, or to which no pre-emption or homestead claim had attached, at the time of the definite location of its road."

And, in speaking of the order of withdrawal, said:

"That order took these lands out of the public domain, as between the railroad company and individuals; but they remained public lands, under the full control of congress, to be disposed of by it in its discretion at any time before they became the property of the company under an accepted definite location of its road."

The purpose of the withdrawal, as has been often declared by the supreme court, was to protect the grant. What protection would be afforded by a withdrawal which left the withdrawn lands in the same position as other lands of the public domain? The construction which is adopted by the majority of the court in this case renders the withdrawal an idle and meaningless act.

Digitized by Google

If it is the true construction, the grant to the railroad company might have been entirely defeated by entries in the land office prior to the date of definite location of the road. It is true that in the case of Northern Pac. R. Co. v. Musser-Sauntry L. L. & Mfg. Co. the court, while maintaining the right of congress at any time prior to the definite location to withdraw the granted lands and bestow them in aid of another road, answered the argument that such a construction might operate to defeat the entire grant by referring to the presumption that congress "acted and would act in good faith," and without intent to deplete the grant by subsequent legislation, or, in other words, declared that, while congress had the power to deplete the grant, it might be relied upon not to exercise the power. But can any such presumption arise in favor of the protection of a land grant as against the entry of individual settlers under the homestead and pre-emption laws? May they be relied upon to act in good faith, and with due regard for the rights of the railroad company and the intention of congress? In the sentence above quoted from the opinion in Menotti v. Dillon, "That order took these lands out of the public domain, as between the railroad company and individuals," is contained, in brief, the rule of law which is established by the decisions, and by which the present question should be governed. Lands so withdrawn are reserved from settlement by pre-emptors. So far as the settler is concerned, they are no longer within the public domain, or, as was said in Northern Pac. R. Co. v. Musser-Sauntry L. L. & Mfg. Co., "The act of the secretary was, in effect, a reservation." These utterances of the supreme court, which are subsequent in time to the decision in the Sanders Case, manifest the purpose of the court to adhere to its settled definition of the office and effect of a withdrawal,—a definition which can have but one meaning. If such is the true construction of the grant, a pre-emption entry, the initial step of which was taken subsequent to the withdrawal, cannot avail to except the land from the grant.

(94 Fed. 946.)

GRAND TRUNK RY. CO. OF CANADA v. BAIRD.

(Circuit Court of Appeals, Second Circuit. March 1, 1899.)

No. 16.

INJURY TO EMPLOYE—CONTRIBUTORY NEGLIGENCE.

Plaintiff had been for years foreman of track repairs on the tracks in the yards of the defendant railroad company, and was familiar with the course of business in switching in the yards. He knew that when an engine of the defendant went westward beyond a certain point on a certain track it must return on another track. He knew that an engine had gone upon the first-named track, and must shortly return upon the other. He glanced at the switches, and thought he saw that the track was closed, and walked between the tracks, and turned to cross on the return track, when he was struck by the engine. He did not look, on the assumption that the engine was not coming, because he had heard no signal of its approach. *Held*, that he was guilty of contributory negligence.

Digitized by Google

In Error to the Circuit Court of the United States for the Northern District of New York.

The defendant in error, hereinafter called the "plaintiff," brought an action at law, subsequently removed to the United States circuit court for the Northern district of New York, against the Grand Trunk Railway Company of Canada, hereinafter called the "defendant," to obtain damages for an injury alleged to have been suffered by its negligence. A verdict for $14,500 was rendered for the plaintiff, upon which judgment was entered, and this writ of error was brought to review the judgment.

George F. Brownell, for plaintiff in error.

George Raines, for defendant in error.

Before LACOMBE and SHIPMAN, Circuit Judges.

SHIPMAN, Circuit Judge. The injury occurred about half past 11 o'clock in the forenoon of May 4, 1892, upon a clear day, at the railroad yards of the New York Central Railroad Company, at Suspension Bridge, N. Y. The plaintiff was then about 36 years old, began railroad work in December, 1875, had been continuously in the employment of the New York Central Company, with the exception of a year and four months, and was a foreman of track repairs upon its tracks at Suspension Bridge, from May 8, 1890, until the accident. The main tracks of the New York Central are south of the Suspension Bridge station. Tracks Nos. 1 and 2 are north of the station, and extend thence easterly to the New York Central freight yard. Track No. 3 is a stub track, ending at the northerly end of the station. These three tracks run westerly, converge at a point where there are two switches, about 600 feet west of the station, known in the case as "A," and become one track which continues westerly towards the Suspension Bridge. Tracks 1 and 2 are used by the defendant for carrying its freight and passengers into Canada. No. 3 is used by the New York Central road generally. Loaded freight cars destined for the Grand Trunk road are placed in the freight yard east of the station, are brought down by the switching engines of that road, and usually placed upon No. 1, and the train, when made up, is hauled upon that track beyond the switches to the defendant's Suspension Bridge connections. The engine returns, is switched at A to No. 2, comes back to a point east of the station, and a switch is turned to enable it to pass upon No. 1 again. When the switching engine is about to return from the bridge, the switchman opens the switch at A to permit it to pass as a matter of course, and without previous notice, upon No. 2, or, if the switchman is not at that point, a signal of two whistles is given from the engine to recall him. This yard and these tracks are constantly being used for switching purposes, and the plaintiff was familiar with the course of business, and knew, when he saw a switching engine going westward on track No. 1 beyond the switches, that it would soon return on track No. 2. On the morning in question the conductor of engine 449 found among his freight in the New York Central yards two cars for the Erie road. They were placed next the engine, and the train was pulled to the depot, and stopped on track No. 1. The two Erie cars were cut out, sent down on

Digitized by Google

track No. 1, and delivered to the Erie yard by engine 449. The engine came back as usual to the switch, was switched to No. 2, and continued upon that track until the accident happened, 193 feet east of the switch points. The switch was opened by the switch tender from his own knowledge of the necessity for doing so, and without a call by whistle.

The plaintiff testifies that he saw engine 449 when it pulled the train from the freight yard upon track No. 1, that it was cut off, moved away from the train, and was at the switch, A, and was moving westward beyond the switch. He thought that no cars were attached to it. He was, at that time, overseeing the unloading of some ties at a point on the main tracks about 60 feet south of the Diamond crossing, which is about 40 feet west of A. He testifies that he then went over to the frogs near A, and examined those on No. 2, to see whether they were in good order; saw what one of his workmen, named Stahl, was doing, who was working a few feet east of the crossing at the switches A, and who was about opposite the plaintiff on the other side of the track. He then walked down between tracks 1 and 2 a space of about 7½ feet wide, and spoke to a workman named Smith; then walked beyond him about 50 or 60 feet, to speak to his men, who were loading iron on track 3; was going to step across track 2, and had just placed one foot over the rail, when he was struck by engine 449. He says that he was listening for a signal, heard no bell, had not looked back to see whether the engine was returning, paid no attention to it after he saw it move westerly, that when he was looking at Stahl he noticed the condition of the switches, and saw that the switch for No. 1 was open and for No. 2 was closed. He says that the accident might have been six or seven minutes, or a little more than that, after he noticed the condition of the switch. He received very severe injuries. His leg was crushed; was necessarily amputated. The result of his other injuries is probably permanent. His earning capacity is pretty much destroyed, and, if he was entitled to a judgment in his favor, the injury justified the amount of the verdict.

It was apparent that the defendant was not in fault for not seeing and attempting to avoid him when he was upon the track, for he had only placed one foot over the rail when he was struck. When the evidence was closed, the two points upon which the plaintiff relied in order to establish the negligence of the defendant, were an unusual rate of speed of the engine after it passed upon track No. 2, or that it proceeded without ringing the bell. The state of the evidence required that the question of negligence should be submitted to the jury, which the trial judge did substantially as follows:

"The testimony is so clear that the engine came, and, track No. 2 being open, proceeded, as it customarily did, that it seems to me the only matter which requires your serious consideration upon this branch of the case is whether the engine, after it passed upon track No. 2, proceeded at an undue rate of speed, or proceeded without ringing the bell. In the first place, what was the customary rate of speed, and what was the practice in respect to ringing the bell? I shall not dwell upon the evidence. It has been suggested—and the suggestion is entitled to consideration—that all the men in charge of this engine testify that the bell was being rung, and that the engine was moving at

Digitized by Google

a very moderate rate of speed, and it is competent for you to infer from their conduct of the engine as they would have us believe it was upon this occasion, and the other testimony in the case, what the ordinary practice was. If you find that their testimony is not reliable, that they were not in observance of the ordinary practice, that they were running the engine at an unusual rate of speed, and were not ringing the bell, then you can find the plaintiff has established his case, so far as it rests upon the negligence of the defendant. If, on the other hand, you find that on this occasion the defendant, through its employés, observed the precautions which were usually adopted, running the engine at the usual rate of speed, ringing the bell, as they testify they did, then the plaintiff must fail, because he will not have succeeded in establishing that the defendant was guilty of negligence."

The verdict of the jury establishes the fact that they found the issue for the plaintiff.

The remaining vital question in the case is whether the conduct of the plaintiff so palpably showed contributory negligence that the judge should, in accordance with the request of the defendant, have taken the case from the jury. He did submit it to them under a charge manifestly in favor of the defendant, but permitting a verdict in favor of the plaintiff. His charge upon that subject was, in substance, as follows:

"Then we pass to the question of contributory negligence. And you are to bring the judgment and observation of intelligent men to the consideration of the particular circumstances of the case. If it is true that the plaintiff supposed that the switch on No. 2 was not open; if it is true that, going only the distance that he did,—190 or 200 feet,—he would have heard a signal made by the approaching engine to the switchman; if it is true that, not hearing this signal, believing the switch to be closed, and not hearing the ringing of the engine bell, because none was rung, he stepped upon the track,—you may find that that was not an act of negligence on his part, but that under the same circumstances a man of ordinary care and prudence would have done the same thing. Yet you are not to lose sight of the consideration which has often been enforced by the courts, and is the law, that it is the duty of every person, when crossing a railroad track, or when approaching any perilous place, to exercise the faculties which his Creator has given him for his preservation and protection; to exercise all his faculties, including his eyes and ears. Were the circumstances in this case such as to justify a man, in the exercise of ordinary prudence, in not turning about to see whether the train was approaching? Were the circumstances such that he could rely upon hearing the approach of an engine?"

He also said that, if the plaintiff had turned about, and looked behind him, before stepping upon the track, he could have seen the approaching locomotive. If contributory negligence was established beyond question, it was so established by the testimony of the plaintiff in connection with the uncontroverted facts, and the case could not have been taken from the jury except upon the ground that, regarding his entire testimony as true, the facts as admitted by him permitted no escape from contributory negligence on his part. The uncontroverted facts were that the scene of the accident was a railroad yard, in which switching engines were constantly in operation; that the course of business for such engines upon tracks 1 and 2 was uniform, and well known by the plaintiff, who was in an important position, and thoroughly trained in the work of the yard, and who knew that when an engine went westward beyond the switches at A it must return upon track 2. His conduct was based, according to his testimony, upon the facts that he had seen that

Digitized by Google

track No. 2 was closed, that until it was open no engine could reappear upon it, that he should hear a signal by bell telling that the engine had reappeared, and that he listened, as he walked, for that purpose. It is admitted that he did not otherwise watch for the return of the engine, or look to see whether it was coming. The question, then, is, can a jury be permitted to say that his attempt to cross No. 2 was, in view of this state of facts, not an act of negligence, but justifiable as an act of ordinary prudence? The question of negligence is ordinarily one of fact, and, being such, is to be submitted to the jury for their ultimate determination. "The question of negligence is one of law for the court only where the facts are such that all reasonable men must draw the same conclusion from them; or, in other words, a case should not be withdrawn from the jury unless the conclusion follows, as a matter of law, that no recovery can be had upon any view which can be properly taken of the facts the evidence tends to establish." Gardner v. Railroad Co., 150 U. S. 349, 14 Sup. Ct. 140; Elliott v. Railway Co., 150 U. S. 245, 14 Sup. Ct. 85; Railroad Co. v. McDonald, 152 U. S. 262, 14 Sup. Ct. 619; and authorities there cited.

While there is no supremacy in the rights of owners of railroads operated by steam over the rights of individuals who are also lawfully using the same roadway, yet the dangers from this means of transportation are manifest, while its use has become a necessity, and it is therefore simply prudent for the passer-by to exercise the caution which experience has shown to be needful. An ordinary and almost instinctive exercise of that caution is an endeavor to determine by eyesight, rather than by surmise, whether danger is at hand. It has, therefore, become a requirement, as a general rule, that a person of mature years, and in the possession of his faculties, who is about to cross a railroad track over which steam engines are known to be in constant use, must necessarily use the precautions against danger which his eyes and ears and powers of observation provide. This is not a statutory rule, and there are probably cases in which such a compulsory regulation is not applicable, and in which other circumstances exist which control its reasonableness; as, for instance when the injured person, confused by the negligence of the railroad officers, has made a mistake in his means of remedy. Elliott v. Railway Co., supra. It is, however, in ordinary cases, a command of common prudence recognized by reasonable men, is reiterated by courts, and should not be frittered away by juries. The language of the supreme court, especially when directed to the duty of railroad employés to avoid carelessness in the crossing of tracks, has been clear and definite. Upon the general subject of carelessness by a foot passenger when called upon to cross a railroad track, Mr. Justice Field said in Railroad Co. v. Houston, 95 U. S. 697,—a case of injury which resulted in death,—as follows:

"The failure of the engineer to sound the whistle or ring the bell, if such were the fact, did not relieve the deceased from the necessity of taking ordinary precautions for her safety. Negligence of the company's employés in these particulars was no excuse for negligence on her part. She was bound to listen and to look, before attempting to cross the railroad track, in order to avoid an approaching train; and not to walk carelessly into the place of pos-

Digitized by Google

sible danger. Had she used her senses, she could not have failed both to hear and to see the train which was coming. If she omitted to use them, and walked thoughtlessly upon the track, she was guilty of culpable negligence, and so far contributed to her injuries as to deprive her of any right to complain of others."

To the same effect is Schofield v. Railway Co., 114 U. S. 615, 5 Sup. Ct. 1125. The duty of a railroad employé in a railroad yard to be attentive to the probable or usual movements of switching engines which are in constant use is commented upon in Aerkfetz v. Humphreys, 145 U. S. 418, 12 Sup. Ct. 835. That a railroad employé in railroad service is not to assume that the train is not approaching, or that a thing which he wants to do can be done in safety, is sharply considered in the Elliott Case, supra. It is true that, if there are degrees of negligence, the injured man in that case was guilty of more inexplicable negligence than the plaintiff, but it was negligence of the same kind, and the suggestions of Mr. Justice Brewer in delivering the opinion of the court are, therefore, of value:

"It thus appears that the deceased, an experienced railroad man, on a bright morning, and with nothing to obstruct his vision, starts along and across a railroad track, with which he was entirely familiar, with cars approaching, and only 25 or 30 feet away, and, before he gets across that track, is overtaken by those cars and killed. But one explanation of his conduct is possible, and that is that he went upon the track without looking to see whether any train was coming. Such omission has been again and again, both as to travelers on the highway and employés on the road, affirmed to be negligence. The track itself, as it seems necessary to iterate and reiterate, is itself a warning. It is a place of danger. It can never be assumed that cars are not approaching on a track, or that there is no danger therefrom. It may be, as is urged, that his motive was to assist in getting the hand car out of the way of the section moving on the siding. But, whatever his motive, the fact remains that he stepped on the track in front of an approaching train without looking, or taking any precautions for his own safety. This is not a case in which one, placed in a position of danger through the negligence of the company, confused by his surroundings, makes, perhaps, a mistake in choice as to the way of escape, and is caught in an accident; for here the deceased was in no danger. He was standing in a place of safety on the south of the main track. He went into a place of danger from a place of safety, and went in without taking the ordinary precautions imperatively required of all who place themselves in a similar position of danger."

These cases, and others in the federal courts (Railway Co. v. Moseley, 6 C. C. A. 641, 57 Fed. 921), emphasize the point that the belief on the part of the injured person that an accident is not going to occur because he does not suppose that a train is at hand, is not an adequate reason for neglect to take the natural means at his command to determine whether an accident is imminent, for the "track is a warning and a place of danger." In this case the accident happened on a fine, clear day, when there were no unusual circumstances to distract the attention of an experienced man, like the plaintiff. He knew the important fact that engine 449 must shortly return on track 2. He had glanced at the switches, and saw, or thought he saw, that the track was closed, walked eastward between the tracks Nos. 2 and 3, and turned to cross No. 2 in the belief or assumption that the engine was not coming, because he had heard no signal of its approach. He crossed, when, if he had turned about and looked, he could have seen the approaching engine; and the cause

Digitized by Google

of the injury was his violation of the duty of protecting himself against an obvious danger. The judgment is reversed, with costs, and the cause is remanded to the circuit court for a new trial.

(94 Fed. 959.)

IRVINE v. ANGUS et al.

(Circuit Court of Appeals, Ninth Circuit. May 23, 1899.)

No. 438.

On Petition for Rehearing. For former opinion, see 93 Fed. 629.

George W. Towle, Jr., for plaintiff in error.

Pierson & Mitchell and Garrett W. McEnerney, for defendants in error.

Before GILBERT and ROSS, Circuit Judges, and DE HAVEN, District Judge.

DE HAVEN, District Judge. We are satisfied with the general views announced in our former opinion, and with the conclusion there reached, except in one particular, and that relates to the amount of the judgment which the circuit court should be directed to enter in favor of the plaintiff in error. The bill of exceptions recites that:

"It was admitted by defendants that the assessments mentioned in the complaint were, each and all, duly levied upon the shares of stock therein mentioned by said corporation, the Morgan Mining Company; * * * that each of said assessments was paid by Irvine from his own funds at the last moment that the same could be paid before the said shares would otherwise have been lawfully offered for sale."

In our former opinion we inadvertently assumed that the aggregate amount of the assessments so paid by Irvine was $15,190.06; that being the amount named in the prayer of the complaint, and for which judgment was demanded against the defendants in error. In the petition for rehearing our attention has been called to the fact that this amount is in excess of the aggregate of the sums alleged in the body of the complaint to have been paid by Irvine on account of such assessments, and therefore in excess of the amount admitted by the defendants in error to have been paid by him. This error, however, can be corrected by a modification of our former judgment, without granting the petition for a rehearing. The petition for a rehearing will therefore be denied, and our former judgment will be modified so as to read as follows: The judgment of the circuit court is reversed, and the cause remanded, with directions to that court to render judgment upon the admissions of the parties contained in the bill of exceptions, in favor of the plaintiff in error, for the sum of $11,527.80, with legal interest thereon from May 21, 1884, and costs.

ROSS, Circuit Judge (dissenting). I am unable to agree to the disposition of this case now made by the court. In the opinion here-

Digitized by Google

tofore delivered, we have treated the case as an action at law. In such a case there must be, as a basis for a judgment, a verdict of a jury, or, in the event a jury be waived by the parties, findings of fact by the court, unless there be an agreed statement of facts entered into by the parties in lieu of such findings. In the present case the court below made findings of fact, which this court held erroneous in an essential particular. The logical and necessary result of such holding is, in my opinion, the reversal of the judgment, and the remanding of the case to the court below for a new trial. I do not think this court is justified in looking to admissions made during the progress of the trial, embodied in the bill of exceptions, as a basis upon which to order judgment,—especially where, as here, those admissions are contradicted by the findings of fact made by the court below. I am therefore of opinion that the judgment should be reversed, and the cause remanded to the court below for a new trial.

(94 Fed. 960.)

HANSON v. SMITH et al.

(Circuit Court of Appeals, Ninth Circuit. May 2, 1899.)

No. 471.

1. PLEADING—VARIANCE.

Where plaintiff in an action for damages counts on the loss of profit on a sale of property which he alleges he had made, but was prevented from consummating by reason of defendants' breach of a contract to sell him the property, and in compliance with an order of court files a bill of particulars, setting out the name of the person to whom he had made the sale, and its terms, he is not entitled to introduce evidence of a different sale to another person.

2. CONTRACTS—BREACH—FORFEITURE OF OPTION.

Plaintiff, who had secured from defendants an option to purchase from them an interest in certain mining claims at the expiration of nine months, agreeing to prosecute development work on the claims meantime, expending a certain sum, and that, if work ceased thereon for 30 days, the option should be forfeited, hired two of the defendants to work on the claims. Shortly after they had commenced work, and while he was indebted to them for wages, he left them with a small amount of supplies, promising to return in three weeks. He did not return, or send them either money or supplies, and they heard nothing from him for about three months. A month after he left, they suspended work, and, after the expiration of 30 days, declared the option forfeited. *Held*, that their action was justified.

In Error to the Circuit Court of the United States for the Eastern Division of the District of Washington.

The plaintiff in error brought an action against the defendants in error for damages for breach of an option to purchase certain mining property. The complaint alleged: That on August 24, 1895, the defendants in the action, in consideration of the sum of $1, gave to the plaintiff therein, under their hands and seals, a written option to purchase a three-fourths interest in the Shylock and the Hamlet mineral claims, situate near Mark creek, in British Columbia, for the sum of $12,000, to be paid on June 1, 1896. The instrument contained the stipulation that: "The party of the second part [the plaintiff] take possession of and commence developing said mining claims, and continue work thereon during the life of this agreement, which said work is to be paid for by the party of the second part or his agent, and, further, that this agreement is

Digitized by Google

made for the period of nine months, if not suffered to lapse through noncompliance with its conditions, or surrendered voluntarily, before its expiration. Suspension of work on or about the mining claims for more than one month at any time during the life of this bond, unless agreed to by the parties of the first part, shall be deemed a forfeiture of this agreement or bond." That on the same day the plaintiff entered into an agreement with two of the defendants, Smith and Cleaver, whereby he employed them to enter upon the work of developing and mining as required in the first agreement, and promised to pay them therefor $3 per day while so employed. That in pursuance of said contract the plaintiff furnished said defendants the necessary tools to carry on said work, and advanced them provisions of the value of $25, and that about the middle of the month of September, 1895, he returned to his home, in Colorado, intending to be absent about three weeks. That he was unable to return within that time, and so advised Smith and Cleaver by a letter written from the city of Spokane. That on November 26, 1895, he again wrote them, requesting an immediate report of their expenditures upon the mine. To this letter he received an answer dated December 31, 1895, advising him that Smith and Cleaver had quit their work on the mine October 18, 1895, and on November 19, 1895, had filed a notice declaring that the agreement had lapsed. That prior to the receipt of notice of the said forfeiture the plaintiff had contracted and arranged for the sale of said mining property upon terms which would have resulted in a profit to him of $50,000, and that by declaring the contract forfeited a cloud was cast upon his right to sell the property, and he was unable to effect a sale thereof, to his damage in the sum of $50,000. The defendants in the action moved on May 17, 1897, that the plaintiff be required to furnish a bill of particulars showing to whom he made the sale of the mining property, and the terms thereof, and on the same day the motion was allowed by the court. On February 10, 1898, the defendants moved for an order to dismiss the action for the failure of the plaintiff to file the bill of particulars. On February 28, 1898, a bill of particulars was filed, in which it was stated that the sale was to be made to E. A. Pennington, and was agreed upon in February, 1896, and that the price to be paid was $12,000, in addition to which the plaintiff was to receive $2,000 in cash, and a one-fourth interest in the property. On the trial of the cause, upon the close of the evidence the jury were instructed by the court to return a verdict for the defendants. Among other evidence offered by the plaintiff was a proffer of proof of a contract of sale, not in writing, made to one Schlesinger, which, upon objection, was excluded by the court; the court ruling that the plaintiff must confine his proof to the one sale which he had pleaded, and that he could not have been damaged by the failure of any other sale. The court also ruled that "if the plaintiff, at the time he bargained for the property, had in mind some one to whom he could go and sell the property for a big price, and the defendants knew nothing about it, and were entirely ignorant of his opportunities for realizing on the property, that the plaintiff would not have a right to recover from the defendants the amount of such profits, which were known to him and unknown to the defendants." These rulings are the principal assignments of error.

C. S. Thomas, W. B. Heyburn, E. M. Heyburn, and L. A. Doherty, for plaintiff in error.

Blake & Post, for defendants in error.

Before GILBERT and ROSS, Circuit Judges, and HAWLEY, District Judge.

GILBERT, Circuit Judge, after stating the facts as above, delivered the opinion of the court.

The question of the admissibility of the offered proof of the oral contract of sale to Schlesinger was one which rested in the sound discretion of the trial court, and we discover no ground for holding that discretion was abused. The plaintiff had filed a complaint in which it was stated that the wrongful conduct of the defendants in declaring the option forfeited was the cause of his failure to make

Digitized by Google

an advantageous sale of the property. The defendants had the right to require that he specify the purchaser, and the date and the terms of the sale, and the court so ordered. After many months of delay, this information was finally furnished, and on the issues so tendered the parties went to trial. The plaintiff failed to prove a contract of sale to Pennington. He then offered proof of a verbal contract to sell to Schlesinger. If he had such a contract, he knew it at the time when his complaint was filed and the issues were formed, and it was his duty then to have disclosed his intention to rely upon it. There could be damages but for the loss of one sale. The plaintiff had pleaded such a loss, and he had specified it as the loss of the sale to Pennington. The offer of evidence of another sale came too late, and the court properly excluded it.

From the view which we take of the issues, and of the evidence which is contained in the bill of exceptions, we do not deem it necessary to discuss further the assignments of error. The option which the plaintiff obtained from the defendants contained the stipulation that his failure to perform work upon the mine for the period of one month during the life of the option should operate to forfeit the same. The agreement which accompanied the option provided that the plaintiff should expend upon the mining property during the nine months of the option $1,500, which is an average of $166.66 per month. Smith and Cleaver were employed to begin the work under this agreement, and began it in the latter part of August, 1895. The plaintiff fitted them out with tools and provisions to the extent of $70. About the middle of September he left them, promising to return in three weeks. He never did return. He testified that he wrote them a letter from Spokane, at a date not stated, inquiring about the progress of the work, but did not state that he wrote anything about furnishing them supplies, or that he asked them for a bill of what was due them. On November 26th he wrote, informing them that he had been ill, and asking what amount was due them for labor, and what supplies they had had to purchase. This letter was received some two or three weeks later. In the meantime Smith and Cleaver had, on October 18th, quit work, and a month later had declared the option forfeited, according to the stipulation which it contained. The plaintiff did not testify that he had any contract or understanding with them whereby they were to work for him while he was away, or that they were to work for him longer than during the three weeks of his proposed absence. Up to the date of their receipt of the letter of November 26th, they had received no information from him to indicate that he intended to pay their wages or to furnish them supplies. At the time when the plaintiff left them, he already owed them $15 or $20 for work; and when they quit work they had been engaged nearly two months, during which they had received nothing except the first outfit of tools and provisions. Under the circumstances, we think the option was forfeited, and that the defendants had the legal right to so declare, and that on November 19, 1895, if not before, that instrument became canceled. The sale which was claimed to have been made to Pennington was not made, according to the evidence, until

Digitized by Google

March, 1896, which was some time after the plaintiff had received notice that the option was forfeited. Up to that date the plaintiff had still made no tender of payment of any sum to Smith and Cleaver for work, nor had he employed any one in their place to keep up the work which the option called for. At that date he had no interest in the option upon which damages could be predicated, and upon that ground alone the court would have been justified in directing the jury to return a verdict for the defendants. The judgment will be affirmed.

(94 Fed. 964.)

ROBINSON v. SOUTHERN NAT. BANK OF NEW YORK.

(Circuit Court of Appeals, Second Circuit. May 25, 1899.)

No. 148.

NATIONAL BANKS—ASSESSMENTS AGAINST SHAREHOLDERS—LIABILITY OF UNREGISTERED OWNER.

A pledgee of stock of a national bank, who sells it in accordance with the terms of the pledge, and becomes the purchaser, but never has it transferred on the books of the bank, is not liable for an assessment made under Rev. St. § 5151, on the bank's insolvency.[1]

In Error to the Circuit Court of the United States for the Southern District of New York.

Edward W. Paige, for plaintiff in error.

Wm. B. Hornblower, for defendant in error.

Before WALLACE and SHIPMAN, Circuit Judges, and THOMAS, District Judge.

WALLACE, Circuit Judge. This is a writ of error by the plaintiff in the court below to review a judgment for the defendant, entered upon a verdict by the direction of the court. The plaintiff was the receiver of the State National Bank of Vernon, Tex., which became insolvent in August, 1894, and brought this action to recover an assessment upon the stockholders of the bank made by the comptroller of the currency. The action was brought upon the theory that the defendant was a shareholder and liable for the assessment, pursuant to the provisions of section 5151 of the Revised Statutes of the United States. It appeared upon the trial that in January, 1893, one Curtis was the owner of 180 shares of the capital stock of the bank, which stood in his name on the books of the bank, and for which he held the usual certificates; that on that day he pledged the shares with the defendant as collateral security for the payment of certain liabilities, including a note for $15,000, payable four months after date; that, by the terms of the pledge, the defendant was authorized, upon nonpayment of the note at maturity, to sell the shares at any time, without advertisement or notice to the pledgor.

[1] For liability of stockholders to creditors, see note to Rickerson Roller Mill Co. v. Farrell Foundry & Machine Co., 23 C. C. A. 315, and note to Scott v. Latimer, 33 C. C. A. 23.

Digitized by Google

and to become the purchaser at the sale, discharged from any equity of redemption by the pledgor; that the note was not paid at maturity, and in August, 1893, the defendant advertised the stock to be sold at auction at the public exchange in New York City, and gave eight days' notice by telegraph to the pledgor; that at the time thus advertised the defendant bought the stock, paying for it $20 to the auctioneer, and thereupon credited the proceeds of the sale upon the note by an indorsement thereon; and that the certificates for the stock remained in the possession of the defendant from the time of the purchase until after the making of the assessment by the comptroller of the currency, but the stock was never transferred to the defendant upon the books of the bank. The facts certainly would have justified a finding by the jury that the relation of pledgor and pledgee had been terminated by the defendant, and the defendant had become the purchaser of the stock with the intention of becoming the exclusive owner, and was in this sense its owner when the bank failed. The only ground upon which it could be ruled that the plaintiff was not entitled to recover was that, as the stock had never been transferred to the defendant upon the books of the bank, and remained in the name of the original owner, the defendant was not a shareholder, within the meaning of section 5151. By section 5139 of the Revised Statutes, the capital stock of national banks is made "transferable on the books of the association, in such manner as may be prescribed by the by-laws or articles of association." The section then declares:

"Every person becoming a shareholder by such transfer shall, in proportion to his shares, succeed to all the rights and liabilities of the prior holder of such shares."

It is the generally accepted doctrine of the courts that, notwithstanding a provision of this kind in the organic law of a corporation, the legal title to its shares of stock passes, as between vendor and vendee, upon a transfer of the certificates, accompanied by a power of attorney for their transfer upon the books, without an actual transfer upon the books. Until registration, however, the purchaser does not acquire the privileges of a stockholder of the corporation. He can compel the corporation to recognize him as a stockholder; but, until he has been registered as such, he has no right to vote, and dividends are payable to the stockholder of record. Is such a purchaser a shareholder, within the meaning of section 5151 of the Revised Statutes, which declares that "shareholders of every national banking association" shall be individually responsible to the extent of the amount of their stock for the debts of their association? It is somewhat remarkable that, in all the litigations which have been presented to the supreme court involving the liability of shareholders of national banks upon assessments made by the comptroller of the currency, the question which is thus presented has never been distinctly decided.

In Pauly v. Trust Co., 165 U. S. 619, 17 Sup. Ct. 470, the court had before it a case in which a pledgee who had received from his debtor a transfer of shares as collateral security for a debt surrendered the certificates to the bank, and took out new ones in which he was de-

Digitized by Google

scribed as pledgee, but never was registered otherwise upon the books of the bank. In deciding, as the court did, that the pledgee was not liable to an assessment as a stockholder, the cases previously adjudged by the court were elaborately reviewed, and in the opinion several rules were stated as deducible therefrom, and among them was the following:

"That the real owner of the shares of the capital stock of a national banking association may, in every case, be treated as a shareholder, within the meaning of section 5151."

On the other hand, in Richmond v. Irons, 121 U. S. 58, 7 Sup. Ct. 788, in considering the question of the liability of the stockholders to an assessment under the section, the court used this language:

"By section 5139 of the Revised Statutes, those persons only have the rights and liabilities of stockholders who appear to be such as are registered on the books of the association; the stock being transferable only in that way. No person becomes a shareholder, subject to such liabilities and succeeding to such rights, except by such transfer. Until such transfer, the prior holder is the stockholder for all the purposes of the law."

The proposition which has been quoted from the Pauly Case was not necessary to the decision of the cause; nor was the proposition quoted from Richmond v. Irons necessary to the decision of that cause. An examination of the cases cited by the supreme court fails to disclose one in which the owner of the shares has been held liable, under the section, who has never been the owner upon the books of the bank; and the cases in which the "real owner" has been held liable were those in which, being the registered owner, he had transferred his shares to another for the purpose of escaping the liability of a stockholder, or caused them to be registered in the name of an irresponsible transferee. Such was the case in Bank v. Case, 99 U. S. 628, where the registered owner caused the stock to be transferred to one of its clerks, who acquired no beneficial interest in it, and upon the understanding that he would transfer it at request. In Bowden v. Johnson, 107 U. S. 251, 2 Sup. Ct. 246, the registered shareholder, in apprehension of the bank's failure, had transferred his stock to an irresponsible person. It is well settled that one to whom stock has been pledged as collateral security, and who has caused it to be registered upon the books of the bank in his name as owner, is liable as a stockholder for the benefit of creditors as though he were the real owner. The courts have placed his liability upon three grounds: That he is estopped from denying his liability, because he has voluntarily held himself out to the public as the owner of the stock; that, by taking the legal title, he has released the former owner from liability; and that, after having taken the apparent ownership, and become entitled to the privileges of a stockholder, it would be unreasonable to release him from the responsibilities of a stockholder. None of these reasons apply in the case of one who, like the defendant, has never been a stockholder upon the books of the bank, has never held himself out as such a stockholder, has not defeated the liability as a stockholder of the pledgor, and has not enjoyed the privileges of a stockholder.

In Bank v. Harmon, 79 Fed. 891, the defendant became pledgee of

Digitized by Google

40 shares of stock, of the par value of $100 each, in a national bank, as collateral security for a demand loan made in November, 1891. In July, 1892, the loan not having been paid, the pledgee procured a transfer of the shares on the books of the bank to one of its employés who was irresponsible and had no interest in the transaction, in order that the latter should remain the registered owner of the shares. The bank failed in April, 1894, the shares at the time standing in the name of the pledgee's employé. This court held, upon the authority of the Pauly Case, that the pledgee was not liable as a shareholder of the bank. Obviously he was the substantial owner of the shares, though technically the relation of pledgor and pledgee had not been terminated. The amount of the loan was nearly double the value of the shares, and the time which had elapsed denoted that the pledgor would never seek to redeem. The pledgee, by causing the transfer to be made upon the books of the bank, had discharged the liability of the pledgor as a stockholder to the creditors of the bank. If there was no moral duty on the part of the pledgee in that case to subject himself to liability as a shareholder, there was not on the part of the defendant in the present case; and, if no legal liability was incurred by the pledgee in that case, there is no reason why any should attach to the defendant in this case, unless it is found in the letter of the statute. Our decision in that case was affirmed by the supreme court. 172 U. S. 644, 19 Sup. Ct. 877. The question presented is an interesting one, and we should certify it to the supreme court, if there were any necessity for adopting that course. But, as our decision is reviewable by that court, and will be reviewed, however we may dispose of the case, it seems proper to decide the cause according to our convictions, and without attempting an elaborate discussion of the question. Our conclusion is that the defendant, never having been a registered shareholder of the bank, is not liable to the assessment. The judgment is accordingly affirmed.

(94 Fed. 968.)

PACIFIC MILL & MINING CO. v. LEETE.

(Circuit Court of Appeals, Ninth Circuit. May 15, 1899.)

No. 500.

1. ESTOPPEL IN PAIS—ACQUIESCENCE IN CLAIM OF ANOTHER.

Where, at the time of the sale of property situated on public land, it was understood between the parties, though not stated in the contract, that the purchaser claimed the right to collect and receive a sum due from the United States on account of the cancellation of an entry made of the land, on which the purchase money had been paid, and thereafter, at the request of the purchaser, the seller, with knowledge of the facts, executed a power of attorney to enable the purchaser to collect the money in its name, which he took steps to do, the seller was estopped to subsequently revoke such power of attorney and collect the money and retain it for its own use, which prevented the purchaser from itself afterwards collecting and retaining the money.

Digitized by Google

2. ESTOPPEL.

The acquiescence by a seller of property in a claim of the purchaser to a sum to be refunded by the government on account of the concellation of an entry of land on which the property was situated created an estoppel, which prevented the seller from itself collecting and retaining the money.

In Error to the Circuit Court of the United States for the District of Nevada.

This was an action brought in the district court of Nevada for Washoe county by B. F. Leete against the Pacific Mill & Mining Company, a California corporation, to recover the sum of $3,200 received by the mining company from the United States. The complaint alleged that this money was received for the use and benefit of the plaintiff. The mining company admitted the collection of $3,200 from the government, but denied that any part of it was received to or for the use or benefit of Leete, or that any portion of it was due to him. The case was transferred to the circuit court of the United States for the district of Nevada, and there decided in favor of the plaintiff (88 Fed. 957). The defendant (Pacific Mill & Mining Company) has brought the case here upon a writ of error. The action is based upon negotiations between the respective parties in connection with the sale and purchase of 1,280 acres of land in Churchill county, Nev., and the personal property and improvements thereon, known as the "Eagle Salt Works."

The statement of facts in this case, as contained in the opinion delivered by his honor, Judge Hawley, in the court below, is conceded by the plaintiff in error to be full and correct, and is the following:

"In 1877 the plaintiff and C. H. Van Gorder, having previously acquired the possessory right to the land in question, applied through the proper land office for a patent thereto from the United States, and paid to the proper officers the sum of $3,200 for said land. Thereafter, in January, 1878, the property in the meantime having been placed in the possession of a receiver, the plaintiff conveyed his undivided one-half interest therein to W. N. Leete. The deed contained this reservation: 'But it is not intended hereby to convey or transfer any interest which party of the first part has or may have to any moneys or accounts in the hands of such receiver, as receiver.' On the same day W. N. Leete conveyed the property to the defendant herein with the same reservation. In March, 1880, the defendant acquired, by deed, the interest in the property of the estate of C. H. Van Gorder, deceased. The application for a patent to the land was canceled by the land department in 1890. In the fall of 1894 negotiations were commenced between the parties hereto with reference to the plaintiff purchasing the property. All of the negotiations were by correspondence. The first was a letter from plaintiff to John W. Mackay, the president of the defendant corporation. D. B. Lyman was at the time of the correspondence the superintendent and managing agent of defendant in the state of Nevada. In February, 1895, plaintiff addressed a letter to Mr. Lyman, saying: 'In December my son * * * wrote me that you wished to sell your Eagle Salt Works for cash; also that you wished to engage salt for your own mills. Kindly please state your price.' On the same day Mr. Lyman sent a reply, stating: 'Whilst I am not prepared to give you a positive answer, as the matter must be submitted to Mr. Mackay for his approval, I think you can purchase the property, with all salt on hand, etc., and all personal property at the works for $6,000, we reserving the right and you guarantying to furnish us with salt for our use f. o. b. cars at works for $4 per ton. We could not agree to take any stated number of tons, as our present consumption amounts to very little; but we do want reserved rights for mill salt at the stated price. We have on hand mill salt, 803 tons; table, 96; stock, 46 tons.' On February 21, 1895, the plaintiff wrote to Mr. Lyman, stating that he did not consider the property a desirable investment at the price of $6,000, but said: 'If we can agree on a price, I will buy.' On February 23d Mr. Lyman answered: 'I would suggest that you write me, or address Mr. Mackay through me, stating the price you are willing to give for the Eagle Salt Works property. I will forward your paper to him and await his decision. I have advised Messrs. Mackay and Flood to sell the property for $6,000, knowing the money paid the government for the land can be recovered, and assuming that the Eagle Salt Works property, with

Digitized by Google

its supplies, salt on hand, et cetera, is worth at least $3,000.' On February 26th the plaintiff wrote to Mr. Lyman as follows: 'Replying to yours of the twenty-first as to the value of the Eagle Salt Works property depending on the recovery of the purchase money from the government, who recovers from the government must deed to the government and abandon all claim to the land, and surrender the receiver's receipt. It is not likely that any person desirous of claiming and holding title to land would solemnly file and record an abandonment; besides, when I deeded to W. N. Leete, I reserved all moneys of account. If I ever owned one-half of that money, I own it now. As you suggest, I will address Mr. Mackay through you.' On March 28th plaintiff wrote to Mr. Mackay, reciting the substance of the former letters between himself and Lyman, and then made the following offer: 'For a bargain and sale deed and possession of your Eagle Salt Works property, as it stands, I will give you in gold coin $3,500; also, at my expense and charge, furnish and load, to your order, at any time within five years, without charge to you, f. o. b. cars in car-load lots, in bulk, at Eagle Salt Works, nine hundred and forty-five tons of mining salt, of like quality to that now on hand. This agreement to bind myself, heirs, and assigns. You put deed in escrow, Bank of Nevada, and I will meet it with $3,500 and agreement to load as above. You put me in possession of the property.' This letter was sent to Mr. Lyman, and plaintiff received a reply stating that he had forwarded the letter to Mr. J. L. Flood, San Francisco, and he will then forward the letter 'to Mr. Mackay, or make known to him by wire the contents of your letter. When I know whether they accept or decline your offer, I will advise you further in the matter.' On April 4th Mr. Lyman addressed the following letter to the plaintiff: 'Your letter to Mr. Mackay, dated 28th of March, has been received, and its contents have been fully noted and considered. Your proposition is fully understood and satisfactory, with the exception of one point, which is open to doubt, and liable to be construed in more than one way, viz. the matter of your furnishing salt to us after sale of the property. I will condense the terms of the proposition, as we understand them, in this way: In consideration of the sum of $3,500 gold coin we will give you a bargain and sale deed of the land as described in the deed from Mr. W. N. Leete to the Pacific Mill & Mining Company, together with all the improvements thereon, including all the salt and other personal property of whatever character upon and connected with the Eagle Salt Works. There is now, by estimate, eight hundred and seventy-five tons of salt on the premises, more or less; provided that you will furnish and load at your own expense and charge, to the order of the Pacific Mill & Mining Company, or the Comstock Mill & Mining Company, in car-load lots in bulk at Eagle Salt Works, mill salt of like quality of that now on hand from time to time not to exceed eight hundred and seventy-five tons in all, within five years from date, at four dollars per ton. We do not obligate ourselves to order or to take any stated quantity of such salt. If these terms are satisfactory to you, please let me know, and immediate steps will be taken to have the deed and agreement made out, and to complete the transaction.' On April 5th Mr. Leete addressed a letter to Mr. Lyman, accepting his offer in words as follows: 'Replying to yours of the 4th instant, the terms as stated in your letter are entirely satisfactory and accepted by me. I am ready. As soon as you have your deed and agreement ready, advise me, and I will come up and complete the transaction.' This ended the negotiations between the parties as to the sale. The deed from the corporation to Leete was executed April 9th, in pursuance of a resolution of the board of directors. It recites a consideration of $3,500, which was paid, and the further consideration as to the delivery of the salt as specified in the letter of Mr. Lyman. The deed is a quitclaim, instead of a bargain and sale, deed; but in all other respects it complies in terms with the result of the negotiations above expressed.

"The plaintiff offered evidence to show what action had been taken by him to recover the money from the government that had been paid into the land office upon the application for a patent, and what steps were taken by the corporation, and the transactions and correspondence between the parties in that regard. The defendant admitted that it had applied to the government for the sum of $3,200, and had received the money; that plaintiff had demanded the money from it, and payment had been refused; but interposed objections to all this class of testimony upon the grounds that it was irrelevant and immaterial,

Digitized by Google

unless some new consideration was shown; the contention on the part of defendant being that the rights of the parties were fixed by the correspondence with reference to the sale. The plaintiff admitted that there was no new consideration, but contended that the subsequent transactions corroborated and made clear the fact that the parties dealt with each other on the basis that the money in the United States treasury was an element of consideration in the sale of the Eagle Salt Works to the plaintiff by the defendant. The court declined to pass upon the admissibility of this evidence, but admitted it subject to the objections, which would be considered and disposed of in the determination of the case. Mr. Leete employed Britton & Gray, at Washington, to collect this money from the government, and was informed by them that there was a law which prohibited the assignment of an account against the United States treasury, and that it would be necessary for him to proceed in the name of the corporation defendant, as the title to the property was in it at the time of the cancellation of the entry, in 1890, and requested him to get a power of attorney from the corporation authorizing them to act for it in obtaining the money for him. There was considerable correspondence and several interviews between the parties on this subject. The first was a letter from Mr. Leete to Mr. Lyman, dated July 31, 1895, as follows: 'I want to try and collect from the government the money I paid on application to enter the Eagle Salt Mine claim in February, 1877. To that end I have employed Britton & Gray, attorneys, who did my business in 1877. They advise me that, under the law and usages of the land department, it is desirable to have a power of attorney from the Pacific Mill & Mining Company, also our joint application from them for repayment of the Van Gorder interest, as they held that interest from about 1879 to cancellation of the entry (1890), and until conveyed to me. I inclose you the papers that Messrs. Britton & Gray have sent me to be executed by the Pacific Mill & Mining Company. Kindly please have them executed, and return to me. I will file with the papers a correct abstract of title from the county recorder of Churchill county.' Some time after this Mr. Leete discussed the matter with Mr. Lyman in San Francisco. From their conversation Mr. Leete understood that Mr. George R. Wells was the attorney for the corporation; but, as a matter of fact, he was only the vice president of the corporation. Lyman accompanied Mr. Leete to Wells' office, and introduced him, and then retired. Mr. Leete testified that Mr. Wells then said to him: 'Our company has not a cent's interest in this matter, and, if we execute a power of attorney to Britton & Gray to proceed in our name, they will presume that we are involved in an obligation to pay their attorney's fees. If you will get Britton & Gray to address us a letter disavowing any claim on us for their services as attorneys, we will execute the power of attorney asked for.' Mr. Wells testified that this statement was substantially correct, except it leaves out the word 'if;' that what he said was, 'If our company has not a cent's interest,' etc. Mr. Leete wrote to Britton & Gray, and they returned a letter to the secretary of the defendant that 'we have no present or prospective claim upon the Pacific Mill & Mining Company for payment for our services in this matter.' Upon receipt of this communication, Mr. Leete forwarded the same to George R. Wells in a letter dated August 27, 1895: 'I am this day in receipt of the inclosure from Britton & Gray addressed to L. C. Fraser, secretary of the Pacific Mill & Mining Company, disclaiming any claim on you for services in the case. I send it to you, as I have never met Mr. Fraser. Please have the two papers executed properly and sent to me, to wit, the power of attorney, also the application for repayment of purchase money. Under the statutes of the United States in such cases as this, we have to proceed in this manner. * * * P. S. If you pay out any money for notary services, I will refund it.' Thereafter the corporation, at a meeting of the board of directors, regularly authorized the power of attorney, as prepared by Britton & Gray, to be executed, and it was duly executed and sent to Mr. Leete, who forwarded the same to Britton & Gray; also the application for repayment of the money. On August 29, 1895, the secretary, in reply, wrote Mr. Leete as follows: 'Inclosed please find power of attorney, signed and acknowledged, Pacific Mill & Mining Company to Britton & Gray; also an application, et cetera, signed by the company. Please send me your check for $5, expenses incurred notary's fees and recopying power of attorney, et cetera.' The plaintiff paid the bill for expenses. The following letter from Leete to Britton & Gray, dated September 5, 1895, shows the steps

Digitized by Google

that were taken by Mr. Leete: 'In the matter of the application for repayment of purchase money paid on entry of Eagle Salt Mine, also called "Eagle Salt Works," certificate No. 170, Carson City, Nevada, bearing date 26th February, 1877, I have this day filed with the register, United States land office, Carson City, Nevada, the following papers, to wit: Abstract title Eagle Salt Works; certificate certified by recorder Churchill county, Nevada; affidavit of B. F. Leete; loss of the receiver's duplicate receipt; power of attorney Pacific Mill & Mining Company to Britton & Gray; power of attorney Benjamin F. Leete to Britton & Gray; application for repayment of the purchase money by Pacific Mill & Mining Company; application for repayment of the purchase money by Benjamin F. Leete.' In connection with this matter, Mr. Leete, on February 6, 1896, addressed the following letter to 'Pacific Mill & Mining Company. John W. Mackay, President': 'Nineteen years ago I applied to enter the Eagle Salt Works land and paid for the land. The Pacific Mill & Mining Company owned the property in 1890. The land department canceled the entry. Last April I purchased the property from the Pacific Mill & Mining Company. There is a law of the United States prohibiting the assignment of a claim against the treasury. It is therefore necessary to present a claim for the repayment of this land money in the name of Pacific Mill & Mining Company. The department wants a quitclaim deed to the government, and the warrant on the treasury will issue in the name of Pacific Mill & Mining Company. I want the warrant indorsed to me by the Pacific Mill & Mining Company. Please order these papers executed and sent to me.' No reply to this letter was ever received. Thereafter the power of attorney executed by the defendant to Britton & Gray was revoked by the order of the board of directors, and an order passed for the execution of power of attorney to H. C. King, and under that power King collected the money from the government, and paid it over to the defendant. The following letters from the commissioner of the general land office to the register and receiver at Carson City were offered in evidence by the defendant, the first dated September 17, 1895: 'Referring to your letter of the 5th instant, transmitting the application of B. F. Leete for repayment of purchase money paid on mineral entry No. 170 for the Eagle Salt Works, * * * I have to inform you that this entry was canceled by office letter "M," November 7, 1890. The abstract of title submitted with said application shows that at date of cancellation the title to this land, under mineral entry No. 170, was in the Pacific Mill & Mining Company, and hence Mr. Leete was not the proper party to make application for repayment. 14 L. D. 140. The application is accordingly denied.' The second letter, dated December 7, 1895, reads as follows: 'Referring to letter "N," September 17, 1895, denying the application of B. F. Leete for repayment of purchase money paid on mineral entry No. 170, you are advised that, as no appeal was taken from said decision within the period allowed, the case has this day been closed.'

"Testimony was offered on behalf of defendant that Mr. Wells, the vice president, Mr. Fraser, the secretary, and Mr. Walsh, a director, of the defendant, did not have knowledge of all the facts at the time defendant gave the power of attorney to Britton & Gray. The general character of this testimony is to the effect the board of directors did not have before them at the time they authorized the power of attorney to be executed to Britton & Gray any of the correspondence 'between Mr. Lyman and Mr. Leete that led to the sale of the property,' and acted upon the representation made by the vice president. The vice president, Mr. Wells, with reference to the conversation between himself and the plaintiff and as to what was considered at the time the power of attorney to Britton & Gray was authorized, testified that Mr. Lyman brought Mr. Leete to him, and introduced him, 'and, as addressing me in the absence of Mr. Mackay, he said: "You are the vice president of this company, and Mr. Leete wants to get some money," or "Mr. Leete will explain to you what he wants." He only stayed a minute, * * * and left Mr. Leete and I together. * * * Mr. Leete said there was some amount of money ($3,200)—I did not burden my mind with the amount—that was coming to him, because he had paid it on some land for which the application had been canceled, and he would like to have the company assist him to get what belonged to him. I said I would be glad to do anything I could. He explained what his claim was,—by reason of a purchase made some years ago. It was money coming from the United States. Q. Did you at that time, or had you ever before at any time, seen a corre-

Digitized by Google

spondence between Mr. Lyman and Mr. Leete with reference to this? A. I never had. * * * It was a California corporation, held property in the state of Nevada, and most all the business was transacted through its officers. I knew very little about the affairs of the company. Q. Were you present at the meeting of the board of directors in which those resolutions were passed making a power of attorney to Britton & Gray? A. Yes. Q. Upon whose representation, if any one's, was that action taken? A. I acted principally in the matter, because I took it for granted what Mr. Leete told was true. That was a corporation that had been a big corporation years and years ago, but done very little lately,—a sort of winding it up, and I had lost most all interest in it. Q. Did Mr. Leete present to you any papers at all in connection with the negotiations he had with Mr. Lyman? A. No. The only thing that I was emphatic about was this: He said he wanted to get a power of attorney, and produced a letter (from Britton & Gray) * * * in which they said, in order to act, it would be necessary to get a power of attorney from the Pacific Mill & Mining Company, because at the time the entry was canceled the owner must receive the money. That was the ground upon which he explained it to me, and was the ground upon which action was called for by the Pacific Mill & Mining Company. The only thing I recall, * * * and which I heard Mr. Leete use my words (and he used almost the words I used). * * * I said, "If we have no interest in this property, and are going to help you, it must be distinctly understood we will incur no obligation by reason of their work as attorneys," and he said, "Well, I will see to that, and get a letter from them." I did not say, "We have no interest," because I did not know it. I was taking his statement to me as true. We must be protected from any claim, because I did not want the company to pay a bill for Mr. Leete's work.' Upon cross-examination he stated that he knew the transaction between Mr. Leete and the Pacific Mill & Mining Company had resulted in the purchase of the Eagle Salt Works property by Mr. Leete, and knew that that transaction had been negotiated between Mr. Lyman and Mr. Leete; that Mr. Lyman was the executive officer in the state of Nevada, and attended to that business, and he always accepted what Mr. Lyman said as conclusive in regard to it; that when Mr. Lyman brought Mr. Leete into the office he thought it was perfectly satisfactory that he should carry out Mr. Leete's desire; that he supposed that Mr. Leete was the owner of the money and entitled to get it; that he was perfectly willing to help him get it, provided the company would not incur indebtedness; that Mr. Leete told him he had paid the money in a transaction long ago, and since then had bought the property, and was entitled to the same."

W. E. F. Deal and Edmund Tauszky, for plaintiff in error.
J. D. Goodwin, for defendant in error.

Before GILBERT, ROSS, and MORROW, Circuit Judges.

MORROW, Circuit Judge. The question to be determined is, which of the parties is entitled to the money repaid by the government? It appears that the defendant in error (plaintiff in the court below) was an original locator of the land, and paid the government its price for the same. He thereafter sold his interest, and his grantee in turn sold to the plaintiff in error. While the land was in its possession, the government canceled the patent previously issued therefor, but no attempt was made to obtain a return of the purchase price by the plaintiff in error. A few years later the defendant in error bargained for the property and purchased it. He then attempted to recover from the government the original purchase price, and found it necessary to collect it through the plaintiff in error, his grantor, as it was the owner of the property at the date of cancellation of the patent. He asked its assistance, and it was at first given, but later revoked, and the money collected by plaintiff in

Digitized by Google

error for its own use and benefit. To enable the plaintiff in the court below to recover this money from the defendant, it was necessary for him to show that there was an agreement or understanding between them, at the date of the deed from defendant to plaintiff in 1895, that plaintiff should have the money upon its collection from the government, and that the right to the recovery of this money was an element of consideration in his purchase of the land. There was no specific agreement in writing in regard to the transaction, and the language of the correspondence must be the guide in determining the nature of the understanding of the respective parties. The oral evidence related principally to the acts and conduct of the parties subsequent to the execution of the deed, and, as tending to show the understanding of the parties at the time the deed was executed and delivered, it was admissible. The correspondence shows that early in the negotiations the defendant in error claimed to be the owner and entitled to one-half of the money in the hands of the government, whether he purchased the property of plaintiff in error or not. It is also shown that the plaintiff in error knew that this money could be recovered from the government, and, when defendant in error asserted his right to one-half of it, no denial was made by plaintiff in error of this right. In the further negotiations, resulting in an offer by defendant in error and its acceptance by plaintiff in error, no mention was made of this money. Plaintiff in error did not assert any claim to this money for itself at this time, and, in fact, after the transaction was closed and title had passed to the defendant in error, the plaintiff in error regularly executed a power of attorney to the attorneys of defendant in error for the express purpose of assisting the defendant in error to collect the amount for himself. It was only upon being advised that the land department required a quitclaim deed from it, and that the warrant on the United States treasury would issue in the plaintiff's name, that it revoked this power of attorney, and proceeded to the collection of the money independent of the claims or rights of defendant in error.

Plaintiff in error claims that it was induced to make the power of attorney by the representations of defendant in error as to his ownership of the money, and was then in ignorance of its legal rights. It is true that parties acting in ignorance of their rights are protected by the law from imposition and deceit; but the facts show that defendant in error did not deceive or impose upon plaintiff, as, at the very outset of the negotiations, he stated his claim of an interest in the money held by the government, and immediately, upon receiving a deed to the interest of plaintiff in error, proceeded to the collection of the entire amount. The presumption is warrantable that, had the statutes permitted an assignment of an account against the United States treasury, the defendant in error would have recoverd the money from the government without objection from the plaintiff in error. "The doctrine is settled that, in general, a mistake of law, pure and simple, is not adequate ground for relief. Where a party with knowledge of all the material facts, and without any other special circumstances giving rise to an equity in his behalf, enters into a transaction affecting his interests, rights, and liabilities,

Digitized by Google

under an ignorance or error with respect to the rules of law controlling the case, courts will not, in general, relieve him from the consequences of his mistake." 2 Pom. Eq. Jur. § 842. A leading case under this rule, and illustrating its reasons, is Bilbie v. Lumley, 2 East, 469. In this case an insurer, with knowledge of all the facts which relieved him of his liability on a policy of insurance which he had signed, but in ignorance of the legal rights resulting from those facts, paid the amount he had insured, and afterwards he brought an action to recover back the money as paid under a mistake. The court held that the action could not be maintained. Lord Ellenborough said:

"Every man must be taken to be cognizant of the law; otherwise, there is no saying to what extent the ignorance might not be carried. It would be urged in almost every case."

Had the defendant in error been able, under the laws of the United States, to collect the money in controversy from the government upon the power of attorney executed by the plaintiff in error, the latter would not, under the doctrine of this case, have been able to recover it from the defendant in error. This being so, it is not perceived how a statute of the United States relating to the assignment of claims against the government, and designed only for the protection of the latter, can so change the rights of the parties as to give the plaintiff in error a right to the fund which it did not otherwise possess or have a legal right to enforce. Under the facts as disclosed by the testimony, the plaintiff in error should undoubtedly be considered as having acquiesced in the claim of defendant in error to the money at the time the deed was executed by plaintiff in error, and also when it executed and gave to him the power of attorney to collect for himself the money from the government. The minds of the parties met in the fulfillment of their agreement or contract on these two occasions, and the plaintiff in error is estopped from denying that understanding later, upon the discovery that it had possessed certain legal rights of which it had not availed itself. Having allowed the defendant in error to act upon the understanding had by both parties, the plaintiff in error cannot now deny that understanding, to the loss or injury of the defendant in error. Storrs v. Barker, 6 Johns. Ch. 166; Mississippi Coal & Ice Co. v. The Ottumwa Belle, 78 Fed. 643; Illinois Trust & Savings Bank v. City of Arkansas City, 40 U. S. App. 257, 22 C. C. A. 171, and 76 Fed. 271; Smiley v. Barker, 55 U. S. App. 125, 28 C. C. A. 9, and 83 Fed. 684; Markham v. O'Connor, 52 Ga. 183; Cunningham v. Patrick, 136 Mo. 621, 37 S. W. 817. "The vital principle [of estoppel in pais] is that he who by his language or conduct leads another to do what he would not otherwise have done shall not subject such person to loss or injury by disappointing the expectations upon which he acted. Such a change of position is sternly forbidden. It involves fraud and falsehood, and the law abhors both." Dickerson v. Colgrove, 100 U. S. 578; Fetter, Eq. §§ 21, 22. "Equitable estoppel, in the modern sense, arises from the conduct of a party, using that word in its broadest meaning as including his spoken or written words, his positive acts, and his silence or negative omission to do anything. Its foundation

Digitized by Google

is justice and good conscience." 2 Pom. Eq. Jur. § 802. "The doctrine seems to be established by authority that the conduct and admissions of a party operate against him in the nature of an estoppel, wherever, in good conscience and honest dealing, he ought not to be permitted to gainsay them. Thus negligence becomes constructive fraud, although, strictly speaking, the actual intention to mislead or deceive may be wanting, and the party may be innocent, if innocence and negligence may be deemed compatible. In such cases the maxim is justly applied to him that, when one of two innocent persons must suffer, he shall suffer who by his own acts occasioned the confidence and loss." Stevens v. Dennett, 51 N. H. 324. In view of these established principles of law, which appear to be applicable to the conduct of the plaintiff in error in this transaction, we are of the opinion that the money refunded by the government and collected by the plaintiff in error belonged of right to the defendant in error. The judgment of the lower court is therefore affirmed.

(94 Fed. 975.)

BANCROFT v. HAMBLY.

(Circuit Court of Appeals, Ninth Circuit. May 15, 1899.)

No. 492.

1. VARIANCE—ACTION ON CONTRACT OF EMPLOYMENT.

   In an action on a contract of employment to recover salary for services rendered thereunder, in which the complaint alleges performance on the part of the employé, proof of such performance is essential, and the plaintiff cannot recover on evidence that the employé was prevented from performing the contract by defendant, it being shown that he did not in fact render any services thereunder.

2. FEDERAL COURTS—FOLLOWING STATE DECISIONS—CONSTRUCTION OF CONTRACTS.

   A federal court is not at liberty to accept as conclusive the construction of a contract by the supreme court of a state, where such construction in no manner depends on any state law, and is not pleaded as creating an estoppel between the parties; but is required to exercise its independent judgment, giving to the state decision, however, due weight as a precedent.[1]

3. PARTNERSHIP—CONTRACT CREATING—CONSTRUCTION.

   B., who was the owner of a publishing company, entered into a contract with S., by which he sold and assigned to him an interest in the business, reciting that it was shortly to be incorporated, in consideration of past services, and that S. should devote his services to the company for 10 years. The contract provided that the interest of S. should be forfeited and revert to B. if S. should fail to perform his part of the contract, and that one-half of it should revert in case of his death within five years. It further provided that the salary of S. should be a certain sum per month. *Held*, that the contract created a partnership, and contemplated the payment of the salary of S. by the firm, or by the corporation when formed, and that an action to recover such salary could not be maintained against B. individually.

In Error to the Circuit Court of the United States for the Northern District of California.

[1] For state laws as rules of decision in federal courts, see note to Wilson v. Perrin, 11 C. C. A. 71, and note to Hill v. Hite, 29 C. C. A. 553.

Digitized by Google

Page, McCutcheon & Eells, for plaintiff in error.
Reddy, Campbell & Metson, for defendant in error.

Before GILBERT and ROSS, Circuit Judges, and HAWLEY, District Judge.

ROSS, Circuit Judge. This is one of a series of actions brought against the plaintiff in error to recover salary at the rate of $350 per month, alleged to be due one N. J. Stone under and by virtue of a contract entered into on the 20th day of August, 1886, between him and the plaintiff in error. All of the actions were brought in the superior court of the state of California. In the first, final judgment passed for the plaintiff, and was affirmed by the supreme court of the state in 112 Cal. 653, 44 Pac. 1069. In the second, judgment was rendered for the plaintiff in the trial court, from which no appeal appears to have been taken. The third is the present action, and was brought in the superior court of the city and county of San Francisco, state of California, by the defendant in error, as the assignee of Stone, who, the complaint alleges, assigned to the defendant in error on June 13, 1896, all his right, title, and interest in and to any money then due or to become due under the contract. On the petition of the defendant the case was transferred to the court below for trial. The contract, which is set forth in hæc verba in the complaint, is as follows:

"This agreement, made in San Francisco, California, by H. H. Bancroft and N. J. Stone, witnesseth: That in consideration of the valuable services done by the said Stone in conducting the publication and sale of the historical works of the said Bancroft, the business formerly being conducted as the Bancroft's Works Department of A. L. Bancroft & Co., but now being done and shortly to be incorporated under the laws of the state of California as the History Company, the said Bancroft hereby sells and assigns to the said Stone a one-tenth interest in the said History Company, plates, paper, stock, money, outstanding accounts, or other property of said company, upon the following conditions: The said N. J. Stone is to devote his whole time and best energies, so far as his health and strength shall permit, for a period of not less than ten years from the date of this agreement, to the publication and sale of the historical works of H. H. Bancroft, and of such other works, and conduct such other business as may be from time to time taken up and entered into by said History Company; and the said Stone agrees not to enter into or engage in, directly or indirectly, any other mercantile or manufacturing business, or in any other business or occupation, which shall in any wise absorb his mind and strength, or interfere with his interest or efforts on behalf of the said History Company, during the said term of ten years. Upon the incorporation of the History Company, one-tenth of the whole number of shares shall be issued and delivered to the said N. J. Stone, but, should the said Stone fail in any wise to carry out this agreement, or any part thereof, in its full letter and spirit, then the said one-tenth interest in the said History Company shall be forfeited, and revert to the said H. H. Bancroft: provided, and it is distinctly understood and agreed, that, in case of the death of the said N. J. Stone before the expiration of five years from the date of this agreement, the said Stone having fulfilled all the conditions of this agreement up to that time, then one-half of the said one-tenth interest of the said Stone in the History Company shall go to his heirs, and be their property unconditionally; and, in the event of the death of the said Stone at any time after the expiration of five years from the date of this agreement, the terms hereof having been fully complied with, then the whole of the said one-tenth interest shall belong to his heirs unconditionally. The salary of the said Stone shall be $350 a month. The copyright of the said historical works belongs exclusively to the said Bancroft, and shall be fifty

Digitized by Google

cents a volume for the History and Diaz, and twenty cents on the Little History of Mexico.

"Signed at San Francisco, the twentieth day of August, 1886.

"H. H. Bancroft.
"N. J. Stone.

"Witness: W. N. Hartwell."

The present action is for salary at the rate of $350 a month, alleged to be due to the plaintiff, as assignee of Stone, for a period extending from April 1, 1894, to August 20, 1896, the complaint alleging performance by Stone of all the terms and conditions of the contract during that period of time, and the refusal of the defendant to pay therefor. To the complaint the defendant interposed a demurrer on the ground that it does not state facts sufficient to constitute a cause of action, which demurrer was overruled by the court below. 83 Fed. 444. An answer was then filed by the defendant to the action, in which the defendant denied that during the period covered by the complaint Stone performed any of the terms or conditions prescribed by the contract sued on, and also averred that during that period he had been engaged in a business prohibited by the terms of the agreement. At the trial, Stone admitted, among other things, that he did not perform any service whatever for either the defendant, Bancroft, or the History Company, from April 1, 1894, to August 20, 1896, but testified that on April 2, 1894, he served Bancroft with a written notice, wherein he notified the latter that he was still willing and ready, as theretofore, to comply with the terms and conditions of the agreement, a copy of which was annexed to the notice; and that he would at all times thereafter be willing to perform all of the acts required of him by its terms. At the time Stone served this notice, he asked for a reply. Bancroft answered that he would look it over at his leisure, but never did, in fact, make any reply to the notice, nor did Stone see him, or have any further communication with him, either orally or in writing, during the time covered by the present action. Stone further testified, in substance, that he held himself in readiness to perform his duties under the contract; that he never was discharged by Bancroft or the History Company; that he never withdrew from the agreement, and that he was not permitted to do any work thereunder during the time covered by the present action; that during this period he went to the office of the History Company from time to time, sometimes as often as once a week. Stone further testified that in the month of June, 1894, he undertook the San Francisco agency of a compound called the "Fitz Alcohol Cure," which was manufactured in the East, and consigned to him for sale, the conduct of which business he has continued in San Francisco ever since.

This being substantially the evidence in the case, we are of opinion that the court below should have granted the defendant's motion for an instruction to the jury to render a verdict in favor of the defendant; for, conceding the sufficiency of the complaint to constitute a cause of action in favor of the plaintiff, one of its constituent elements was the alleged performance by Stone of all of the terms and conditions of the agreement from April 1, 1894, to August 20, 1896,—the period of time covered by the action. Such performance

Digitized by Google

by Stone being one of the essential elements of the alleged cause of action, proof thereof was, of course, equally essential. Saunders v. Short, 30 C. C. A. 462, 86 Fed. 225, 229; Vinegar Co. v. Burns, 44 Neb. 21, 62 N. W. 301. That Stone did not perform any service under the contract from April 1, 1894, to August 20, 1896, was distinctly testified by himself, and there is nothing in the evidence to the contrary. Why he did not do so need not be inquired, in view of the pleadings in the case. The complaint does not count upon prevention by Bancroft of performance on Stone's part of his obligations under the contract; nor is it an action for damages sustained by the plaintiff by reason of any such prevention, or of any other breach of the contract by Bancroft. On the contrary, it is, as has been shown, an action on the contract to recover the amount of salary, for a certain period, therein provided for, based entirely on the alleged performance by Stone of all of his obligations thereunder, but which allegation of performance the proof wholly fails to sustain. But, above and beyond this, we are of opinion that the contract upon which the action is based, rightly construed, did not confer upon Stone the right to hold Bancroft primarily and individually liable for the monthly salary thereby provided for. We are aware that department 1 of the supreme court of California held to the contrary in the case already cited, but that the opinion in that case did not have the unanimous approval of that court is shown by the dissent of the chief justice from the order denying the hearing of the case by the court in bank. 112 Cal. 660, 44 Pac. 1069. In construing the contract in question, Mr. Justice Garoutte, in delivering the opinion in that case, said:

"We think the only fair interpretation to be given to this contract is that Bancroft was to pay Stone three hundred and fifty dollars per month for his services. There is but a single theory that can be advanced looking to a contrary construction, and that is to the effect that this contract beween Bancroft and Stone constituted them partners (Stone possessing a one-tenth interest in the partnership), and that, consequently, the salary of said Stone was to be paid by the partnership. Upon a mere cursory examination of the contract, it is plainly evident that it does not, and was never intended to, create a partnership between these two parties. This is patent from the fact that it was contemplated in the writing itself that in the near future the History Company was to be incorporated. It is doubly apparent when we consider that the one-tenth interest in the property given by Bancroft to Stone failed to vest any absolute title in him, but was dependent upon conditions, and liable to be forfeited, and revert to Bancroft, at any moment. That Stone had no such interest in this business as to constitute him a partner is further made plain when we look at the provision of the contract wherein it is expressly stipulated that, if Stone should die within five years from its date, then only one-half of the one-tenth interest should pass to his heirs. To hold these parties partners under the agreement would make Stone's salary dependent upon the profits of the business. There is nothing contained therein to indicate any such intention, and it is certainly not so provided. We conclude that the contract should be construed as a contract of hiring of Stone by Bancroft at an agreed price of three hundred and fifty dollars per month. There are no other matters of law raised by the demurrer of sufficient importance to demand our attention. Within a few months after the aforesaid agreement was entered into, the History Company was incorporated with a capital stock of one hundred shares, ten of which were issued to Stone, in pursuance of the agreement, and he was thereupon elected vice president of the corporation. Prior to the agreement with Stone and the subsequent incorporation, Bancroft was the sole owner of the business, conducting it under the name of the History Company. For

Digitized by Google

several years after incorporation the business progressed amicably and prosperously, and then differences arose. No salary was forthcoming, and this litigation resulted. It is now insisted by appellant that during the fourteen months covered by this litigation respondent is not entitled to any salary, for the reason that he performed no service. It must be borne in mind that this action is not one for damages based upon the breach of a contract of hiring, but is an action based upon the contract itself, upon an express promise to pay, and in this regard the complaint was advisedly framed; for the evidence of both the plaintiff and defendant expressly shows that he (Stone) was never discharged from his employment, and, if he was hired for a term of ten years at a monthly salary, until he was discharged by his employer, or voluntarily gave up the employment, we know of no legal reason why his employer's promise to pay is not binding and enforceable in an action at law."

We are precluded from treating either the judgment in the case just referred to or the judgment of the trial court in the second action, above referred to, as an estoppel, for the reason that neither judgment is in any manner pleaded as such, and both were admitted in evidence for the express and only purpose of showing performance by Stone of his part of the contract up to the time of the commencement of the present action. But, as a precedent, the opinion of the supreme court of the state in the case cited is entitled, as are all of its opinions, to great respect. The present case, however, involves the interpretation of a contract not in any way dependent upon the construction of any state law, and, that being so, we are not at liberty to follow the decision of that court construing the contract if such construction does not meet with our approval, but are bound to exercise our independent judgment. Lane v. Vick, 3 How. 464; Watson v. Tarpley, 18 How. 517; Carpenter v. Insurance Co., 16 Pet. 495; Amis v. Smith, Id. 303; Butz v. City of Muscatine, 8 Wall. 575; Oates v. Bank, 100 U. S. 239; Railroad Co. v. National Bank, 102 U. S. 14; Liverpool & G. W. Steam Co. v. Phœnix Ins. Co., 129 U. S. 397, 9 Sup. Ct. 469. The contract in question shows upon its face that the business and property constituting the subject of it, and which was then owned and conducted by Bancroft, was then carried on by him under the name of the History Company. In that business and property Bancroft, by the contract, conveyed to Stone an undivided one-tenth interest; the language being: "The said Bancroft hereby sells and assigns to the said Stone a one-tenth interest in the said History Company, plates, paper, stock, money, outstanding accounts, or other property of said company." Then follow the conditions upon which the transfer of that interest is made. The contract expressly recites that the business which had formerly been conducted as the "Bancroft's Works Department of A. L. Bancroft & Co." and then being conducted as the "History Company," and in the conducting of which Stone had rendered valuable services, was shortly to be incorporated under the latter name, pursuant to the laws of the state of California. The consideration for the conveyance of the one-tenth interest was, as shown by the contract, not only the "valuable services" theretofore rendered by Stone "in conducting the publication and sale of the historical works of the said Bancroft," but also his services for at least the next succeeding 10 years; not only in the publication and sale of the historical works of Bancroft, but also in conducting such other business as should

Digitized by Google

from time to time be taken up and entered into by the History Company; for the conveyance of the one-tenth interest to Stone was by the contract expressly declared to be made upon the conditions that "the said N. J. Stone is to devote his whole time and best energies, so far as his health and strength shall permit, for a period of not less than 10 years from the date of this agreement, to the publication and sale of the historical works of H. H. Bancroft, and of such other works, and conduct such other business, as may be from time to time taken up and entered into by said History Company; and the said Stone agrees not to enter into or engage in, directly or indirectly, any other mercantile or manufacturing business, or in any other business or occupation, which shall in any wise absorb his mind and strength, or interfere with his interest or efforts on behalf of the said History Company, during the said term of ten years. Upon the incorporation of the History Company one-tenth of the whole number of shares shall be issued and delivered to the said N. J. Stone, but, should the said Stone fail in any wise to carry out this agreement, or any part thereof, in its full letter and spirit, then the said one-tenth interest in the said History Company shall be forfeited, and revert to the said H. H. Bancroft: provided, and it is distinctly understood and agreed, that, in case of the death of the said N. J. Stone before the expiration of five years from the date of this agreement, the said Stone having fulfilled all the conditions of this agreement up to that time, then one-half of the said one-tenth interest of the said Stone in the History Company shall go to his heirs, and be their property unconditionally; and, in the event of the death of the said Stone at any time after the expiration of five years from the date of this agreement, the terms hereof having been fully complied with, then the whole of the said one-tenth interest shall belong to his heirs unconditionally." Can there be any doubt that when this contract was executed Stone thereby became the owner of an undivided one-tenth of the business and property of the History Company, subject only to the conditions therein stated, and that Bancroft remained the owner of the other nine-tenths? We think not. From that time until the incorporation of the company, was not Stone entitled, by virtue of the contract, to one-tenth of the profits, if any, of the business? Undoubtedly so. And when the company was incorporated, and Stone's proportion of its stock issued to him, did he not continue to be entitled to his share of the profits of the business? Undoubtedly so. The 10-years services that Stone, by the contract, agreed to render were not to be rendered to Bancroft individually, but, as is expressly declared in the contract itself, in the publication and sale of the historical works of Bancroft, and of such other works and of such other business "as may be from time to time entered into by said History Company." The obligation imposed by the contract on Stone not to engage in any other business or occupation was limited to such other business or occupation as would "interfere with his interest or efforts on behalf of the said History Company." The services thus required by the contract to be performed by Stone were, therefore, confined entirely to the business of the History Company, in which he had an undivided one-

Digitized by Google

tenth interest, subject to the conditions accompanying its conveyance to him. His joint interest in the business entitled him to his proportionate share of the profits, the ascertainment of which necessarily depended upon the previous ascertainment and payment of the expenses of conducting the business. There is certainly nothing in the contract indicating any intention on the part of either of the parties thereto that Stone should be exempt from any part of the expenses incurred in conducting the business in the profits of which he was legally and justly entitled to share. It would be extraordinary if there had been. By a statute of California partnership is defined to be "the association of two or more persons for purposes of carrying on business together and dividing the profits between them." Civ. Code Cal. § 2395. No express stipulation for dividing the profit and loss is necessary, as that is an incident to the prosecution of the joint business. Pars. Cont. p. 57; Bloomfield v. Buchanan, 13 Or. 108, 8 Pac. 912; Richards v. Grinnell, 63 Iowa, 44, 18 N. W. 668. It seems to us impossible to successfully deny that from the time of the execution of the contract in question to the time of the incorporation of the History Company the respective parties to the contract were entitled and bound to share in the profit and loss of the business of the company in proportion to their respective interests, for, beyond question, they owned the property and business jointly, and were conducting it jointly. They were therefore partners therein. The fact that the respective parties contemplated a speedy incorporation of the company, which intention was expressly stated in the contract, in no way altered the character that the law attached to the agreement under which they meanwhile conducted the business. Nor did the conditions specified in the contract, upon the happening of which there would be a forfeiture on the part of Stone of the whole or a part of his interest in the business of the company, affect the relationship of the parties while it existed. Hills v. Bailey, 27 Vt. 548; Petrakion v. Arbeely (Com. Pl.) 26 N. Y. Supp. 731; Campbell v. Sherman, 55 Hun, 609, 8 N. Y. Supp. 630. As by the execution of the contract Stone became a partner in the business, he would not, under the well-settled law of partnership, have been entitled to any salary for services rendered the firm, unless expressly provided for. In the present case, as by the articles of agreement Stone was made the manager of the business, and was required to devote his entire time to it, and was prohibited from engaging in any other business or occupation that would interfere with his efforts on behalf of the History Company, it was provided that he should receive a salary of $350 a month for his services. Such a provision is not at all uncommon in partnerships. A similar provision appears in the case of Weaver v. Upton, 29 N. C. 458, which case is, in principle, exactly similar to the present one. There, Weaver and Upton had leased of one McKensie a tract of land for three years, in which to mine for gold, and the lessees had entered into possession. Upton was to work 20, and Weaver 4, hands, "bearing a proportionable part of the expense attached thereto." The agreement between them further provided that "the said Upton, of the first part, bargains and agrees to give me, the said Weaver, of

Digitized by Google

the second part, four hundred and fifty dollars to manage the business, which I agree to manage according to the best of my judgment." The court said:

"It seems to us that the agreement was one of partnership; and, the law being well settled that the acting and business partner is never entitled to claim any pay of the firm for his services, unless he stipulates for it in the articles of co-partnership or otherwise, the parties therefore agreed that Weaver should manage the business, and Upton, the other partner, agreed to give him $450 'to manage the business.' Weaver was to bear his proportion of the expense of managing and working the mine. The salary of the superintendent was a part of the expense of the firm. And the firm ought, according to the true construction of the articles, to bear this expense in proportion to the number of hands each partner worked in the mine. The words, 'the said Upton bargains and agrees to give me, the said Weaver, four hundred and fifty dollars to manage the business,' only denote the assent of Upton that Weaver, although a partner, should be paid for his services $450.00. The parties were stipulating concerning the partnership business and the terms on which it was to be carried on; and, among others, that Upton bargained and agreed to let Weaver have $450.00 for his services that year. It seems to us that it would be against justice and right to construe the covenant to be an agreement by Upton that he would pay that sum out of his own pocket. We think that it was an item in the expense account of the firm, and that the firm should pay it."

It will be noticed that in the case just cited the contract recited that Upton agreed to give Weaver $450 to manage the business, but the court held—and, we think, very properly held—that, as the salary of the superintendent was a part of the expense of the firm, the firm ought, according to the true construction of the articles of agreement, to be required to pay it. In the contract here in question there is no statement that Bancroft agrees to pay Stone a salary of $350 a month for the services he is thereby required to render in conducting the business of the History Company, but the provision is, as has been seen, that "the salary of the said Stone shall be $350 a month,"—manifestly to be paid out of the business, to which both parties interested should contribute in proportion to their respective interests, and for which both of the parties interested in the business would be liable in like proportions, if the services provided for were rendered, and the business was unable to pay it; and this, not only while the business was conducted as a partnership, but also after it was conducted as a corporation of the state of California, for, as stockholders therein, each of the parties in interest was not only entitled to his proportion of the profits of the corporate property and business, but liable as well for his proportion of the corporate obligations. We entertain no doubt that, if Bancroft prevented, directly or indirectly, Stone from performing the services in and about the business of the History Company provided for on his part by the contract, or committed any other breach thereof to Stone's injury, the latter would have his action against Bancroft for such damages as he sustained. But such, as has been shown, is not the present action. The judgment is reversed, and cause remanded to the court below, with directions to dismiss the action at the plaintiff's cost.

Digitized by Google

(94 Fed. 983.)

GARRARD v. SILVER PEAK MINES et al.

(Circuit Court of Appeals, Ninth Circuit. May 8, 1899.)

No. 439.

1. PUBLIC LANDS—MINERAL CHARACTER—SALINE LANDS.
   Saline lands are mineral, within the meaning of a provision of an act of congress reserving mineral lands from a grant.
2. SAME—GRANT TO STATE—EFFECT OF RESERVATION OF MINERAL LANDS.
   By Act Cong. June 16, 1880 (21 Stat. 287), congress granted to the state of Nevada 2,000,000 acres of land, to be selected by the state from "unappropriated, nonmineral, public lands." By an act of the state legislature of March 3, 1887 (St. 1887, p. 102), the state expressly disclaimed on behalf of itself and its grantees any rights in any mineral lands which had been or might be selected under such grant, and further provided that its conveyances should give no rights as against persons in actual adverse possession. *Held*, that the state acquired no rights in land selected under the grant which was in fact known mineral land, containing both salt and the precious metals, which had been appropriated in 1865 under an act for the location of land containing salt, surveyed, and the location recorded, and which had ever since been in the actual possession of the locator and his grantees, who had erected a quartz mill thereon at a cost of over $50,000, and that a patent executed by the state therefor to an applicant to purchase who had actual knowledge of all such facts was void.
3. SAME—PATENTS BY STATE—COLLATERAL ATTACK.
   Such patent, being without authority of law, and prohibited by the law of the state which issued it, is subject to collateral attack in an action at law.

In Error to the Circuit Court of the United States for the District of Nevada.

Reddy, Campbell & Metson, for plaintiff in error.

M. A. Murphy, for defendant in error.

Before GILBERT, ROSS, and MORROW, Circuit Judges.

ROSS, Circuit Judge. This was an action of ejectment, in which the defendants prevailed in the court below. 82 Fed. 578. The plaintiff has brought the case here by writ of error. The subject of the action is a certain 40-acre tract of land situate in Esmeralda county, Nev., described in the complaint as the N. E. ¼ of the N. E. ¼ of section 22, township 2 S., range 39 E., Mt. Diablo base and meridian, together with a lot of mill tailings and slimes containing gold and silver, which the plaintiff in his complaint alleges was upon the land, and was removed therefrom and converted by the defendants to the plaintiff's damage. The plaintiff's claim to the land has its foundation in the act of congress approved June 16, 1880 (21 Stat. 287), and in certain legislation of the state of Nevada passed pursuant thereto. By the act of June 16, 1880, congress granted to the state of Nevada 2,000,000 acres of land, which lands, the act declared, were to be selected by the state authorities from "unappropriated, nonmineral, public lands," and "in quantities not less than the smallest legal subdivision." On the 12th day of March, 1885, the legislature of the state of Nevada passed an act entitled "An act to provide for the selection and sale of lands that have been or

Digitized by Google

may hereafter be granted by the United States to the state of Nevada," by which act a state land office was created, of which the surveyor general of the state was made ex officio land register, and to whom all applications to purchase such lands as congress had granted or should grant to the state were required to be made. The act prescribes the course of proceedings in the matter of such applications, and provides that "all lands selected under the two million acre grant of June sixteenth, eighteen hundred and eighty, may be sold in tracts equal to one section to each applicant," and that "no lands shall be sold in tracts less than the smallest legal subdivision." St. 1885, p. 101. Under and pursuant to the provisions of this state legislation, one Alexander Morrison made application to the land register of the state of Nevada for the 40-acre tract in question, making the required payments therefor in the prescribed way, and the land register thereupon selected and made application therefor to the land department of the United States under and by virtue of the act of congress of June 16, 1880. The list of selected land under that grant, including the piece in controversy, was certified by the commissioner of the general land office on the 7th of August, 1890, and by the acting secretary of the interior on the next day, "subject to any valid interfering rights which may have existed at the date of the selection." The act of congress making the grant to the state of Nevada does not provide for the issuance of a patent to the state for the lands thereby granted. But by an act of congress of August 3, 1854 (10 Stat. 346), and embodied in the Revised Statutes as section 2449, it is declared:

"That in all cases where lands have been or shall hereafter be granted by any law of congress to any one of the several states and territories; and where said law does not convey the fee simple title of such lands or require patents to be issued therefor; the lists of such lands which have been or may hereafter be certified by the commissioner of the general land office under the seal of such office, either as originals or copies of the originals or records, shall be regarded as conveying the fee simple of all the lands embraced in such lists that are of the character contemplated by such act of congress and intended to be granted thereby; but where lands embraced in such lists are not of the character embraced by such acts of congress, and are not intended to be granted thereby, the lists, so far as these lands are concerned, shall be perfectly null and void, and no right, title, claim, or interest shall be conveyed thereby."

The supreme court has decided in a number of cases that a certified list issued under and pursuant to this statute is of the same effect as a patent. Frasher v. O'Connor, 115 U. S. 102, 5 Sup. Ct. 1141; Mower v. Fletcher, 116 U. S. 380, 6 Sup. Ct. 409; McCreery v. Haskell, 119 U. S. 327, 7 Sup. Ct. 176; Wright v. Roseberry, 121 U. S. 488, 7 Sup. Ct. 985; Chandler v. Mining Co., 149 U. S. 79, 13 Sup. Ct. 798. The certified list, therefore, embracing the 40-acre tract in question, is to be regarded as a patent from the United States to the state of Nevada,—made, however, as is expressly recited on its face, "subject to any valid interfering rights which may have existed at the date of selection." Based upon that conveyance to it, the state of Nevada on the 22d day of May, 1891, by its proper officers, executed to Alexander Morrison its patent for the 40-acre tract in controversy, which patent recites upon its face that it is executed "according to the provisions of an act of the legislature approved March

Digitized by Google

12, 1885, entitled 'An act to provide for the selection and sale of lands that have been or may hereafter be granted by the United States to the state of Nevada,' and the act amendatory thereof and supplemental thereto." The supplementary act of the state of Nevada is that of March 5, 1887 (St. 1887, p. 124), entitled "An act defining the rights of applicants for and contractors to purchase land from the state of Nevada, and providing for maintaining certain actions concerning such land," by the first section of which it is declared that:

"Every person who has applied to the state of Nevada to purchase any land from it, or who has contracted with the state of Nevada for such purchase, or who may hereafter apply to or contract with the state of Nevada, in good faith, for the purchase of any of its public land, and who has paid or shall pay to the proper state officers the amount of money requisite under such application or contract, shall be deemed and held to have the right to the exclusive possession of the land described in such application or contract: provided, no actual adverse possession thereof existed in another at the date of the application."

The second section of the act excludes, from the right thereby given to every one who has applied or contracted to purchase from the state any such land the right to maintain or defend any action at law or in equity concerning it or its possession, all such land that was in the adverse possession of another at the date of such application to purchase.

Shortly after Morrison received his patent for the 40-acre tract in controversy, to wit, June 29, 1891, he executed a deed therefor to the plaintiff, Garrard.

The answer of the defendant corporation, the Silver Peak Mines, in addition to denying the plaintiff's alleged ownership of the property and his alleged right to its possession, alleges as a defense to the action that in the year 1865, or thereabouts, the predecessors in interest and grantors of the defendant corporation, under and by virtue of an act of the legislature of the state of Nevada entitled "An act to provide for the location of lands containing salt," located and had surveyed a tract of land and mill site and water right in the Silver Peak and Red Mountain mining district of Esmeralda county, Nev., containing 160 acres, specifically described in the answer; that such tract was located upon the unsurveyed and unappropriated public domain of the United States; that in the years 1865, 1866, and 1867, or thereabouts, the grantors and predecessors in interest of the defendant corporation caused to be erected and constructed on the 160-acre tract a quartz mill costing about $70,000; that after the completion of the mill such proceedings were had and taken as that the government of the United States on the 1st day of May, 1879, pursuant to law, issued to the grantors and predecessors in interest of the defendant corporation a patent for 4.97 acres of the land upon which the quartz mill was then constructed, as a mill site; that ever since the year 1865 the defendant corporation and those from whom it has derived its title have been in the quiet, peaceable, and undisturbed possession of the said 160-acre tract of land, including the patented mill site; that ever since the year 1865 the defendant corporation, through its predecessors in interest and grantors, "has been, and now is, a bona fide settler and occupant

Digitized by Google

of the land and premises described in the plaintiff's complaint on file herein, and the whole thereof"; that the defendant corporation and its grantors have made valuable improvements thereon; that such settlement and improvements were made long prior to any selection of the 40-acre tract by the plaintiff or his grantor, and that the plaintiff and his grantor were well aware at the date of the selection under which the plaintiff claims that the defendant corporation and its grantors "was, and had been for a great number of years, in the open, notorious, and exclusive possession of all of said land, claiming ownership of and to the same as against this plaintiff, his grantors, and the entire world"; that on the 19th day of June, 1888, or thereabouts, and prior to the selection under which the plaintiff claims, one D. M. Brunton discovered, located, and claimed a quartz ledge, under the name of the "Mancer Mining Claim," 1,500 feet in length by 600 feet in width, containing gold, silver, and other precious metals, in and upon the 40-acre tract described in the plaintiff's complaint; and that the said Brunton thereafter, for a valuable consideration, conveyed to the defendant corporation all his right, title, and interest in and to the said ledge, and in and to his said mining claim thereon located, ever since which time the defendant corporation has been in the quiet, peaceable, and undisturbed possession thereof. The answer further alleges that notwithstanding that the plaintiff and his grantor well knew that the defendant corporation was, and had been for a long time prior to the date of the application by Morrison to purchase the 40-acre tract described in the complaint, in the quiet, peaceable, and undisturbed occupancy of the said land, and every part thereof, and well knowing that the defendant corporation and its grantors and predecessors in interest had caused to be erected thereon valuable, prominent, and permanent improvements, at a cost of about $100,000, and well knowing that the said land was mineral in character, containing gold, silver, and other precious metals, and also salt and saline, and that the said land was not fit for grazing or agricultural purposes, they, and each of them, falsely and fraudulently misrepresented and misstated the facts to the surveyor general and ex officio land register of the state of Nevada, and by such false and fraudulent acts and misrepresentations induced that officer to believe that the said land was unoccupied land, and nonmineral in character, and that he, so believing the said statements of the plaintiff and his grantor, was induced to select the 40-acre tract described in the complaint as a part of the lands granted to the state of Nevada by the act of congress referred to, when in truth and in fact the said land was not of the class of lands thereby granted, but, on the contrary, was expressly excluded therefrom.

The case, by stipulation of the respective parties, was tried by the court below without a jury, after which the court made, among others, the following findings of fact:

"Third. That none of the land described in the plaintiff's complaint is suitable or fit for agricultural or grazing purposes, but is mineral; the greater portion of it being covered with salines, and a quartz vein, lead, or lode being located and situate thereon. Fourth. That, at the time the grantor of this plaintiff made his application to purchase the land described in the plaintiff's

Digitized by Google

complaint from the state of Nevada, he will [well] knew, and at the date when this plaintiff accepted the deed of the said land this plaintiff well knew, that the said land was appropriated, occupied, and not public land, and in the adverse possession of this defendant. Fifth. That neither the plaintiff nor his grantor, Alexander Morrison, was ever in the possession of the land described in the plaintiff's complaint, or any part thereof." "Seventh. That in the year 1865 the grantors and predecessors in interest of this defendant, Silver Peak Mines, constructed a ten-stamp quartz mill on the unsurveyed and unoccupied public lands of the United States and called it the 'Great Salt Basin Gold & Silver Mining Company's Quartz Mill.' They also located, under the possessory act of the state of Nevada, entitled 'An act to provide for the location of lands containing salt,' approved February 24, 1865, one hundred and sixty acres of land containing salt and other salines. That on the 18th day of November, 1865, they had the said land surveyed by the county surveyor of Esmeralda county, and the boundaries thereof marked by posts and mounds; and on the 18th day of December, 1865, the field notes of said survey were certified to as being correct by the said county surveyor, and on the 20th day of January, 1866, said field notes, together with a diagram of said location and survey, were recorded in the office of the county recorder of Esmeralda county, state of Nevada. That in the spring of 1866 they dug a ditch on three sides of the tract of land so located, surveyed, marked, platted, and recorded, and upon which the aforementioned quartz mill had been constructed; and the forty-acre tract of land, as now claimed by this plaintiff, is situated within the boundaries of said possessory location and survey. That in the fall of the year 1866 the grantors of this defendant, Silver Peak Mines, graded the foundation for a new quartz mill, and during the years 1866, 1867, and 1868 constructed and completed a thirty-stamp quartz mill on the land embraced within their possessory location and survey, and on the land as now claimed by this plaintiff; said mill and improvements costing upwards of fifty thousand dollars. That on the 7th day of November, A. D. 1866, Samuel B. Martin and John W. Harker, being then in the possession of the said lands, and the owners of all the improvements thereon, did, by a good and sufficient deed of conveyance, transfer, sell, and assign all their right, title, and interest in and to the said lands, and every part thereof, together with the improvements thereon, to Silver Peak & Red Mountain Gold & Silver Mining Company, a corporation, which said corporation entered into possession of said land, and every part thereof, and the improvements thereon. That thereafter the said Silver Peak & Red Mountain Gold & Silver Mining Company had a survey made of four and ninety-seven hundredths acres of land for a mill site, upon which the said mill was then constructed, and in the year 1879 the government of the United States, through its land department, issued to this defendant, Silver Peak Mines, as the successor in interest of the said Silver Peak & Red Mountain Gold & Silver Mining Company, a patent for the four and ninety-seven hundredths acres of land upon which the said mill had been constructed, and the said land so patented is within the boundaries of the land now claimed by this plaintiff. That on the 19th day of June, 1888, one D. W. Brunton discovered and located a quartz ledge containing gold, silver, and copper, and other precious metals, in and upon the lands now claimed by this plaintiff, as described in his complaint. That on the 1st day of June, 1889, the said D. W. Brunton, for a valuable consideration, deeded all his right, title, and interest in and to the said mining claim, and every part thereof, to this defendant, Silver Peak Mines, who has been ever since said date, and now is, the owner and in the quiet and undisturbed possession of the said mining claim, and every part thereof. That on the 5th day of April, 1877, the said Silver Peak & Red Mountain Gold & Silver Mining Company became a bankrupt, and proceedings in bankruptcy were instituted in the United States district court, Southern district of New York, in which state said corporation was organized; and Andrew C. Armstrong was duly appointed, qualified, and acted as the assignee of the bankrupt's estate. That Armstrong, as such assignee, on the 13th day of June, A. D. 1877, conveyed all the property of the said Silver Peak & Red Mountain Gold & Silver Mining Company, including the land in controversy in this action, to Charles E. Vail, who, with his wife, conveyed the said property, including the land in controversy, to the defendant Silver Peak Mines, herein, on the 8th day of January, 1878. That the property of the bankrupt corporation, including the land in con-

Digitized by Google

troversy in this action, was also sold at sheriff's sale, under an execution issued out of the district court of the Eighth judicial district, state of Nevada, in and for the county of Esmeralda, in a suit wherein one John I. Blair was the plaintiff and the Silver Peak & Red Mountain Gold & Silver Mining Company was the defendant, at which sale John D. Vail was the purchaser; and on the 5th day of February, A. D. 1878, the said sheriff of Esmeralda county made, executed, and delivered to the said John D. Vail a deed to the property so sold under execution, including the land in controversy. That thereafter, to wit, on the 13th day of September, 1879, the said John D. Vail and his wife conveyed the same by deed to this defendant, Silver Peak Mines. That this defendant has been since last-mentioned date, and now is, in the actual, quiet, peaceable, and undisturbed possession of all of said lands; and it and those through whom it claims and derives title have been in the actual, quiet, peaceable, and undisturbed possession of all of the said land described in the plaintiff's complaint ever since the year 1865, and have caused to be constructed on said land and premises prominent and permanent improvements at an expense of over fifty thousand dollars."

These findings are assailed as being unsupported by the evidence. We think, as did the court below, that it is unnecessary to inquire into the validity of the mesne conveyances under which the defendant corporation asserts title. The action being ejectment, the plaintiff must recover, if at all, upon the strength of his own title. A careful examination and consideration of the record makes it clear that the trial court was entirely justified in finding that the land in question is not only mineral in character, and was so known to be by the plaintiff and his grantor at the time, and long prior to the time, when the latter made application to purchase it from the state of Nevada, but also in finding that it was then in the actual and adverse possession of the defendant corporation, or those under whom it claims, and had been so possessed under the claim of right for mining purposes by the Silver Peak Mines and those under whom it claimed ever since the year 1865. For part of the 40-acre tract claimed by the plaintiff as agricultural land the United States issued its certificate of purchase to the Silver Peak & Red Mountain Gold & Silver Mining Company, under the mining mill site act of congress (Rev. St. tit. 32, c. 6), on the 1st day of May, 1879, which was prior to the making by congress of the grant to the state of Nevada under which the plaintiff claims, and on which mill site there had already been erected, and then stood, a quartz mill costing many thousand dollars. Not only so, but the whole of the 40-acre tract described in the plaintiff's patent is included within the 160-acre tract located by the Great Salt Basin Gold & Silver Mining Company in 1865 under and by virtue of a statute of the state of Nevada entitled "An act to provide for the location of lands containing salt," approved February 24, 1865 (Gen. St. 1885, p. 104), a survey of which was made on the 8th day of November of that year, and recorded in the recorder's office of the county in which the land is situated. That saline lands are mineral is well settled. Morton v. Nebraska, 21 Wall. 660; Milling Co. v. Clay (Ariz.) 29 Pac. 9. Moreover, in and upon this particular 40-acre tract so applied for by the plaintiff's grantor, and patented to him, was the ledge of quartz discovered, located, and claimed by Brunton, whose interest therein was afterwards conveyed to

Digitized by Google

the defendant corporation. That such land as this, whose true character at the time of and prior to the initiation of the proceedings under which the plaintiff claims was disclosed, not only by the public records, but by costly mining structures and improvements erected thereon, of which the plaintiff, as shown by the evidence and findings, had not only constructive but actual knowledge long prior to the making of the application under which he claims, did not pass under the grant to the state of Nevada, and the patent issued by it to the grantor of the plaintiff, is, we think, very clear.

The list certified by the officers of the land department of the United States to the state of Nevada, and which serves as its patent, in terms declares that it is made "subject to any valid interfering rights which may have existed at the date" of the selection of the land by the state. The grant by congress was made in express terms to apply only to "unappropriated, nonmineral, public lands." The grantee, by act of its legislature of March 3, 1887 (St. 1887, p. 102), in terms declared and recognized the fact that the several grants made by the United States to the state of Nevada reserved the mineral lands, and expressly declared that the sales of such lands made by the state were made subject to such reservation. The statute of Nevada further provided that:

"Any citizen of the United States, or person having declared his intention to become such, may enter upon any mineral lands in this state, notwithstanding the state's selection, and explore for gold, silver, copper, lead, cinnabar, or other valuable mineral, and upon the discovery of such valuable mineral may work and mine the same in pursuance of the local rules and regulations of the miners and the laws of the United States: provided, that after a person who has purchased land from the state has made valuable improvements thereon, such improvements shall not be taken or injured without full compensation. But such improvement may be condemned for the uses and purposes of mining in like manner as private property is by law condemned and taken for public use,"—the act declaring, in terms, that "mining for gold, silver, copper, lead, cinnabar and other valuable mineral, is the paramount interest of this state."

Section 2 of the same act declares that:

"Every contract, patent or deed hereafter made by this state, or the authorized agents thereof, shall contain a provision expressly reserving all mines of gold, silver, copper, lead, cinnabar, and other valuable minerals that may exist in such land, and the state for itself and its grantees, hereby disclaims any interest in mineral lands heretofore or hereafter selected by the state on account of any grant from the United States. All persons desiring titles to mines upon lands which have been selected by the state, must obtain such title from the United States under the laws of congress, notwithstanding such selection."

The facts shown by the record make it clear that the patent under which the plaintiff claimed was not only not authorized, but was prohibited, by the statutes of the very state whose patent it purports to be—First, because it was issued for known mineral land; and, next, because the land for which it was issued then was, and for many years prior to the application therefor had been, in the actual occupation of another under a claim of right. That a patent issued without authority of law may be impeached collaterally in a court of law is thoroughly settled. Patterson v. Winn, 11 Wheat. 380; Smelting Co. v. Kemp, 104 U. S. 636; Wright v. Roseberry, 121 U. S. 488, 7 Sup. Ct. 985; Doolan v. Carr, 125 U.

Digitized by Google

S. 618, 8 Sup. Ct. 1228; Davis' Adm'r v. Weibbold, 139 U. S. 507, 11 Sup. Ct. 628; Knight v. Association, 142 U. S. 161, 12 Sup. Ct. 258. The judgment is affirmed.

(93 Fed. 828.)

RICHARDSON v. D. M. OSBORNE & CO. et al.

(Circuit Court of Appeals, Second Circuit. April 4, 1899.)

No. 55.

1. PATENTS—INFRINGEMENT SUIT—LACHES.
   A patent owner who, for about 14 years, witnesses the extensive and increasing manufacture and sale of an alleged infringing machine, without taking any steps to enforce his rights, is guilty of laches precluding him from maintaining an infringement suit.[1]
2. SAME—HARVESTERS.
   The right of the owner of the Fowler patent, No. 181,664, for an improvement in machines for bundling grain, to sue for infringement, *held* to have been lost by laches.

Appeal from the Circuit Court of the United States for the Northern District of New York.

This was a suit in equity by James G. Richardson against D. M. Osborne & Co. and others for alleged infringement of a patent for an improvement in machines for bundling grain. In the circuit court the bill was dismissed because of complainant's laches (82 Fed. 95), and the complainant has appealed.

Horatio C. King and George A. Clement, for appellant.

James J. Storrow and Frederick P. Fish, for appellees.

Before WALLACE, LACOMBE, and SHIPMAN, Circuit Judges.

SHIPMAN, Circuit Judge. Letters patent No. 181,664 were granted on August 29, 1876, to Thaddeus Fowler, as inventor, and to James G. Richardson and his two brothers, Wilbur J. Richardson and Isaac S. Richardson, as assignees of one-half of the patent, for an improvement in machines for bundling grain. A bill in equity, verified on June 8, 1893, which was based upon the alleged infringement of this patent, was brought in the Northern district of New York by James G. Richardson, who became the owner of the entire patent on October 7, 1890, against D. M. Osborne & Co., a corporation, and its officers. The defenses which were relied upon were the unexplained laches of the owners of the patent in attempting to enforce their alleged rights, the prior invention of the patented structure by John F. Appleby, noninfringement, and nonpatentability. The circuit court dismissed the bill by reason of the laches of the owners of the patent. The invention is a part of a harvester, and was a device which will automatically discharge the bundle of grain when a certain predetermined quantity has been gathered, and consisted in a beater, which, having pressed the grain into the holder, was combined with a de-

[1] See note at end of case.

Digitized by Google

liverer, which, when the beater had attained a predetermined pressure upon the bundles, was caused to remove the gathered bundle from the holder, either to the binding machine or to a binding machine combined with the device, or to the ground, to be otherwise bound. Fowler assigned his interest in the patent to the Richardson brothers on November 21, 1876. The only machine which was ever made under this patent was built by the inventor in Seymour, Conn., in the summer of 1876, and is said to have been "shipped West." Whither it went is not stated by adequate testimony, what became of it is unknown, no license was ever given to build or to use a machine, and the patent continued to be a mere paper patent.

The grain-binding harvester, patented to John F. Appleby on February 18, 1879, by letters patent No. 212,420, began to be introduced to the public in 1878, and speedily went into universal use in the grain-producing portions of the Western states, and is said to contain Fowler's bundling device. The leading manufacturers of harvesting machines bought shop rights at prices which seem excessive, it supplanted all previous binders, is still being manufactured, and its widespread use and its commercial success were known by all dealers in machines of this class. James G. Richardson lived in Lake City, Minn., from 1863 to 1887, was in partnership with one of his brothers in the sale of harvesters, reapers, and binders, and the firm acted as agents for the Johnson Reaper Company, J. Easter & Co., Gammon & Deering, and William Deering & Co., who were manufacturers of this class of machinery. The particular business of the complainant was the introduction of farm machines into active work upon the farm, and he must have been perfectly familiar with the mechanism and the extent of the use of the Appleby binder. He regarded the infringement as a palpable one, and, as the use was universal, he thought that practically all the binders and harvesters made in this country between 1879 and 1893 infringed the Fowler patent. This suit was brought about 2½ months before the expiration of the patent, and after the extensive and expensive manufacture of Appleby machines had progressed at an increasingly active rate, within the complainant's knowledge and observation, for about 14 years.

The defendants say that the owners of the patent were practically silent, permitted this expenditure to go on without interference or any adequate assertion of their alleged rights, and that the suit was barred by their inexcusable laches.

The record shows that nothing was done in the way of litigation, or active attempts to push either the patent or their claims, until May, 1890. No effort was made by either of the owners to make contracts or agreements with manufacturers to use the patent, and no effort was made by legal proceedings to suppress its infringement. The complainant's brothers would not enter into expenses for this purpose, would not consult with his attorneys, and opposed litigation. They were not poor and were not rich, but not only discouraged any litigation, but refused to participate in the expenses of an investigation as to the validity of the patent. Meantime, no efficient or active representations were made to the harvester companies of their infringement. The complainant says that he sent notices to the

Digitized by Google

manufacturers, and, among others, to the defendant corporation, in the latter part of 1883, and met the president in Lake City by appointment in January, 1884. He says: "We had some conversation. He asked what our claim was. He was told that it was on the combination. We talked together perhaps fifteen minutes, pleasantly." This was the extent of the manifestation to the defendant of the complainant's claim of right to a part of the Appleby machine, which was being made by the thousands. In May, 1890, an action at law was brought against the Minneapolis Harvester Works, which was compromised before trial, in September, 1891, by the payment of money and a release by the complainant. He did not tell how much money was paid, or whether it was in recognition of the validity of the patent. For aught that appears, all that the defendant did was to pay a trifling sum to be freed from a lawsuit. No other proceeding was instituted until the present suit. The only thing which can be, during the entire history of the invention, characterized as an active exercise of ownership, was the Minneapolis suit, and its outcome is so vague and shadowy that it cannot be told whether it was a successful or an abandoned attempt to sustain the patent. The continued refusal or neglect of the joint owners to impart life to it was so manifest that a court cannot look with favor upon the present attempt to gain money from manufacturers who invested in the effort to supply the demand for Appleby machines, under the belief that it infringed no patent,—a belief which the conduct of the owners of the Fowler patent encouraged. All the adjudged cases in regard to laches proceed upon the inequitable conduct of the complainant, and the inequity which would result if the stale claim was permitted to be enforced, and the judgments adverse to the claimant are founded upon the fact that the party to whom laches is imputed has all the time "knowledge of his rights, and an ample opportunity to establish them in the proper forum; that, by reason of his delay, the adverse party has good reason to believe that the alleged rights are worthless or have been abandoned; and that, because of the change in condition or relations during this period of delay, it would be an injustice to the latter to permit him to now assert them." A further reference to decided cases is unnecessary, as Judge Coxe has cited many of them in his opinion (82 Fed. 95).

Much testimony was also introduced by each party as to the second defense, which was Appleby's priority of invention. The date of the Fowler invention was placed by the complainant and his witnesses in the prima facie case in the summer of 1876, which was its actual date, although an attempt was subsequently made to place it in the summer of 1875. Appleby's first machine was made at the factory of the Parker Steam Reaper Works in Beloit in the winter of 1874–75, was tried in the summer of 1875, and was destroyed by order of one of the owners of the factory. A second crude machine was made, which was finished before January 1, 1876, did no work in the field, and was accidentally burned after the commencement of this suit. Four machines were then built for the same owner, the first one of which was finished in April, 1876, and was tried upon green rye in June, 1876. The written specification of the patent was executed on

Digitized by Google

October 19, 1876. It is probable that the machine was the one described in the Appleby patent. As an entirety, it was not a perfect machine; for the knotting mechanism and the manner of attachment to the harvester were subsequently improved. We think that Fowler's invention was probably in the Appleby machine as and when it was tried in June, 1876; but it is unnecessary to analyze the testimony with the closest care, and to decide the question of the priority of two inventions, the patents upon which have now expired, for the case of the complainant is so defective by reason of the laches of himself and his co-owners that the decree of the circuit court must be affirmed, with costs.

NOTE.

Laches as a Defense in Suits for Infringement of Patents, Copyrights, and Trade-Marks.[1]

1. Permanent Injunction.

[a] (U. S. C. C. Conn. 1895) A delay of over 10 years in suing, after charging infringement, and being met with a denial, bars relief against one who, in the meantime, succeeded to the alleged infringing business.—Owen v. Ladd, 76 Fed. 992.

[b] (U. S. C. C. N. Y. 1897) A patentee who has quietly acquiesced in the open and notorious infringement of his patent for 16 years cannot maintain an action for such infringement. It is no excuse for such delay that his co-owners of the patent would not agree to prosecute infringements.—Richardson v. D. M. Osborne & Co., 82 Fed. 95.

[c] (U. S. C. C. Mass. 1899) A delay of 10 years by a patent owner, after knowledge of an alleged infringement, and correspondence with defendant, who, in good faith, contended for a construction of the patent avoiding infringement, *held* to be such laches as would bar, not merely the claim for profits, but any claim to the interposition of a court of equity.—Starrett v. Tool Co., 96 Fed. 244.

[d] (Pa. Sup. 1899) The members of two competing fertilizer firms agreed upon the sale of the merchandise of the firms to a corporation to be formed, the firms to transfer to the corporation their good will, brands, and trademarks, including the exclusive use of their names, "so far as they shall hereafter apply or become necessary" to the business. The only use made of the name of one firm was as part of the compound corporate title. The products were all advertised and sold under the name of the other firm, such name being used as part of the trade-mark of each of 17 different articles made and sold. The members of the firm whose name was not used thereafter withdrew, and organized a corporation, applying such name to the goods manufactured by it, under which name they were advertised and sold, as required by Act June 28, 1879 (P. L. 180), providing that fertilizers sold should have stamped thereon the name of the manufacturer. *Held*, that the delay of the first corporation for three years, and until the second corporation had built up an extensive business, to restrain the use of such name, where no transfer was ever asked, and no use of the name by the first corporation made, showed such laches and intent to avoid the use of the name as to defeat an application for injunction to restrain such use by the second corporation.—Tygert-Allen Fertilizing Co. v. J. F. Tygert Co., 43 Atl. 224.

2. Accounting for Gains and Profits.

[a] (U. S. C. C. A. 2d Circuit, 1896) The mere fact that, for several years, sales of an infringing hair dye were made by a dealer in New York City, where the patent owner resided, without protest, *held* not to constitute laches preventing an accounting, where there was nothing to show actual knowledge of such sales, and where the advertisements, labels, etc., did not disclose the

[1] Supplementary to note to Taylor v. Spindle Co., 22 C. C. A. 211.

Digitized by Google

nature or ingredients of the dye.—Manufacturing Co. v. Stein, 23 C. C. A. 353, 77 Fed. 612, and 45 U. S. App. 223, reversing (C. C. 1895) 69 Fed. 616.

3. Preliminary Injunction.

[a] (U. S. C. C. Mass. 1880) A preliminary injunction will not issue against a mere user of a machine when plaintiffs have known for several years that the makers thereof were manufacturing such machines, and did not warn or proceed against them or any one else.—Shoe-Mach. Co. v. Dizer, 85 Fed. 864.

[b] (U. S. C. C. Mass. 1895) A delay of five or six years, after knowledge of defendant's alleged infringement, *held* not to affect the right to a preliminary injunction, where his proceedings had been the subject of dispute and negotiation during the whole period.—Heeling-Mach. Co. v. Abbott, 77 Fed. 462.

[c] (U. S. C. C. Pa. 1897) A delay of five years in bringing suit, where defendant was operating under a subsequent patent, and the parties had factories in the same locality, and were engaged in active competition, *held* fatal to an application for a preliminary injunction.—Blakey v. Kurtz, 78 Fed. 368.

[d] (U. S. C. C. Pa. 1897) Knowledge of and long-continued acquiescence by a complainant in an infringement may, in special cases, be fatal on a motion for a preliminary injunction.—Daniel v. Miller, 81 Fed. 1000.

4. Excuses for Delay.

[a] (U. S. C. C. Mo. 1898) Where defendant was notified by complainant, upon entering on the manufacture of an article, that complainant claimed a monopoly thereon under its patent, and was advised of such fact thereafter from time to time during litigation over the patent, a delay of five years in bringing suit for the infringement, during all of which time complainant was engaged in litigation with other infringers, is not such laches as will bar relief.—Manufacturing Co. v. Jackson, 91 Fed. 422.

[b] (U. S. C. C. N. Y. 1898) Where the owner of a patent proceeds with reasonable diligence in the prosecution of test suits for infringement, he will not be held guilty of laches which will defeat suits against other infringers because such suits are not commenced until the validity of his patent has been established.—New York Filter Mfg. Co. v. Loomis-Manning Filter Co., 91 Fed. 421.

[c] (U. S. C. C. N. Y. 1899) Laches is not to be imputed to a patent owner because of his failure to prosecute to judgment a suit against an infringer, after the latter has become totally insolvent, and has disappeared.—Huntington Dry Pulverizer Co. v. Newell Universal Mill Co., 91 Fed. 661.

5. Statutes of Limitation.

[a] (U. S. C. C. N. Y. 1897) A patent was granted May 24, 1864, and infringement was begun in 1865, and continued until the expiration of the patent. Suit was begun November 24, 1877. At the time the patent was granted, therefore, there was no federal statute of limitations applicable to infringements, and the state statute would govern. The state statute was displaced by section 55 of the patent act of 1870, which required suits to be brought during the term of the patent or within six years after its expiration. This provision was repealed by Rev. St. § 5599, but existing causes of action were saved. *Held*, that no part of the claim for infringement was barred.—Campbell v. City of New York, 81 Fed. 182.

[b] (Ky. App. 1897) Ky. St. § 2522, providing that "an action for relief not provided for in this or some other chapter can only be commenced within 10 years next after the cause of action accrued," applies to an action to enjoin the illegal use of a trade-mark.—Northcutt v. Turney, 41 S. W. 21.

[c] (Ky. App. 1897) Limitation as to an action to enjoin the use of a trade-mark runs from the time defendant began its use, and not from the time his predecessors began to use it, in the absence of an allegation that they used it under a claim of right, or that they undertook to convey to him a title thereto.—Northcutt v. Turney, 41 S. W. 21.

Digitized by Google

(94 Fed. 990.)

McELROY v. BRITISH AMERICA ASSUR. CO. OF TORONTO, CANADA.

(Circuit Court of Appeals, Ninth Circuit. May 8, 1899.)

No. 479.

1. INSURANCE—WAIVER OF CONDITIONS OF POLICY—KNOWLEDGE OF AGENT.
   Where the agent of an insurance company, at the time he writes a policy, has knowledge of an incumbrance on the property, or that the insured has procured or arranged to procure concurrent insurance thereon, his knowledge binds the company, in the absence of fraud, and it is estopped to claim the invalidity of the policy on such grounds, notwithstanding any provisions of the policy in that regard.[1]
2. SAME—PAROL EVIDENCE TO VARY CONTRACT.
   Provisions in an insurance policy that it shall be void in case of concurrent insurance or a mortgage on the property, unless the consent of the company thereto is shown by a written indorsement on the policy, do not prevent the insured from sustaining the validity of the policy by parol evidence showing that it was issued with knowledge of the existence of concurrent insurance or of a mortgage on the property.
3. SAME—AGENCY OF SOLICITOR.
   An insurance solicitor, who takes an application for insurance, which is approved and accepted by an insurance company, and on which it issues a policy, and delivers it to the solicitor, who delivers it to the insured, and collects the premium, is, by the ratification of his acts done in its behalf, made the agent of the company in the transaction, and his knowledge binds the company, notwithstanding a provision of the policy that no person, unless duly authorized in writing, shall be deemed its agent; the insured having no knowledge of the actual relations between the solicitor and the company.
4. SAME—FAILURE OF INSURED TO READ POLICY.
   An insured has the right to rely on the presumption that the policy he receives is in accordance with his application, and his failure to read it will not relieve the insurer or its agent from the duty of so writing it.

In Error to the Circuit Court of the United States for the Northern Division of the District of Washington.

This action was brought by James F. McElroy, plaintiff in error, in the superior court of the state of Washington, to recover $2,169.30 and interest, alleged to be due upon a policy of fire insurance issued to Mrs. J. C. Powers, plaintiff's assignor, by the defendant in error. Upon the petition of defendant, the case was removed to the circuit court of the United States for the district of Washington, where it was tried before a jury. At the close of the testimony, the court, at the request of the defendant, instructed the jury to return a verdict for the defendant, and the jury found accordingly. Judgment was entered on the 5th day of August, 1898, to reverse which the plaintiff sued out this writ of error.

The policy in question—No. 825,596—was issued on January 23, 1896, insuring the steamer Cricket, her hull, cabins, tackle, furniture, etc., against loss or damage by fire, to the extent of $3,000. The defense set up in the court below was that the policy was rendered void by the action of the insured in procuring concurrent insurance on the same property in excess of the amount permitted in defendant's policy, and because a chattel mortgage upon the property insured was in existence at the time the policy was issued, of which defendant had no knowledge or notice. It appears that Mrs. J. C. Powers was the owner of the steamer Cricket from the 1st day of January, 1896, up to the time of its loss, on or about February 5, 1896; that during this period Capt. E. M. Barrington,

---

[1] As to waiver of conditions against other insurance, see note to Insurance Co. v. Thomas, 27 C. C. A. 46.

Digitized by Google

son of Mrs. Powers, was captain and managing agent of the Cricket, and was operating the steamer for the transportation of freight and passengers upon the waters of Puget Sound, between the cities of Seattle and Everett. Some days prior to January 23, 1896, H. C. Ewing, a member of the firm of Calhoun & Co., insurance agents in Seattle for a number of companies, called on Capt. Barrington, requesting the privilege of writing insurance upon the Cricket. No contract was made at this time. Some days later, W. M. Calhoun, of the same firm, saw Capt. Barrington, and conversed with him regarding the insurance. In this conversation Barrington claims to have told Calhoun that he wanted to carry $10,000 insurance on the steamer, but that he could probably give Calhoun & Co. only $6,500 of it, because a mortgage on the steamer was held by Capt. MacFarland, who might wish to personally procure the writing of insurance to cover the mortgage. Barrington further testifies that on January 24th he had a conversation with Calhoun by telephone, in which he told Calhoun that the mortgagee had consented to his procuring the insurance, but that he had decided to place that amount ($3,500) through another agent, J. S. McCormick, and would therefore give Calhoun & Co. the writing of $6,500, as previously talked of; that Calhoun told him the steamer had been covered to that amount already, and he would bring the policies to Barrington very soon. Calhoun testifies, with reference to these conversations, that Capt. Barrington told him of the mortgage, but that the largest sum mentioned as insurance desired on the steamer was $6,500; that in the conversation by telephone the captain mentioned his intention of giving $3,500 of the insurance to McCormick, but before the close of the conversation decided to leave matters as they were, thus giving to Calhoun & Co. the entire amount of $6,500. He testifies that he did not know of the additional $3,500 being placed on the steamer, or that it was desired to secure any insurance over $6,500, until after the fire occurred. Immediately after this telephone conversation, which occurred about noon of January 24th, Barrington ordered $3,500 insurance from McCormick. This was written by two companies, the Connecticut, of Hartford, and the Providence, of Washington, and was in favor of the mortgagee, covering the risk from noon of January 24, 1896. These policies were delivered to Capt. Barrington on January 25th. The insurance given to Calhoun & Co. was not written by the companies they represented, but was placed by Calhoun with Hanford & Stewart, agents in Seattle of the Palatine Insurance Company, and C. A. McKenzie, agent for the British America Assurance Company, of Toronto, Canada (the defendant in error), in the amounts of $3,500 and $3,000, respectively. The policy of the latter company covered the risk from noon of the 23d day of January, 1896, and was delivered to Barrington by Ewing, of Calhoun & Co., on January 24, 1896, together with the policy of the Palatine Company, which was written on January 24th. The premium on the defendant's policy was $75, $50 of which Barrington paid Ewing at this time. On the back of the defendant's policy was pasted a printed slip, reading: "Return for renewal, transfer, or indorsement to Calhoun & Co., Insurance, S. E. Cor. Yesler Ave. and Commercial St., Seattle, Wash." The policies of the Connecticut and Providence Companies in favor of the mortgagee do not limit the amount of concurrent insurance. In the policy written by the Palatine Company, for $3,500, these words appear: "$3,000 other concurrent insurance permitted;" and in that issued by defendant in error, for $3,000, the following: "$6,500.00 insurance in all permitted, concurrent herewith;" also: "This entire policy, unless otherwise provided by agreement indorsed hereon or added hereto, shall be void if the insured now has or shall hereafter make or procure any other contract of insurance, whether valid or not, on property covered in whole or in part by this policy; * * * or if the interest of the insured be other than unconditional and sole ownership; * * * or if the subject of insurance be personal property, and be or become incumbered by a chattel mortgage." The steamer was destroyed by fire February 5th following, at Everett, Wash. Before the expiration of the 30-day credit, Mrs. Powers tendered payment of the balance of the premium, but the tender was refused. In due season, to wit, February 21, 1896, the insured furnished proofs of loss to Calhoun & Co., and was notified by them that such proofs had been turned over to the defendant company. This company denied any liability upon its policy, refusing to pay any loss incurred thereon; hence suit was brought for the recovery of the amount apportioned by appraisement to be due from defendant upon its said policy.

Digitized by Google

Harold Preston, E. M. Carr, and L. C. Gilman, for plaintiff in error.

George Donworth and James B. Howe (S. H. Piles, of counsel), for defendant in error.

Before GILBERT, ROSS, and MORROW, Circuit Judges.

MORROW, Circuit Judge, after stating the facts as above, delivered the opinion of the court.

There is but one assignment of error, namely, that the court below erred in granting the motion of the defendant company to give a peremptory instruction to the jury to find a verdict for the defendant, and in giving such peremptory instruction; and the single question presented is whether or not the plaintiff in error had the right to have his case submitted to the jury. It is contended on the part of the defendant, as matter of law, that the policy is void, for the reason that it in express terms provides that, if a chattel mortgage exists on the property, or if insurance shall be obtained to any greater extent than $6,500 in all, concurrent with the amount covered by the policy, it shall be void, and both of such forbidden acts are established by the evidence on the part of the plaintiff to have been done. The plaintiff asserts, on the other hand, that defendant had notice and knowledge of the existence of the mortgage and of the intention of the insured to apply for insurance to the amount of $10,000 in all, through Calhoun & Co., its agents. To this the defendant replies that Calhoun & Co. were not its agents, but rather the agents of the insured, and therefore any notice or knowledge that Calhoun & Co. may have had was not the knowledge of the defendant. Several witnesses testify as to the notice given to Calhoun & Co. of the existence of the mortgage. Barrington was asked, with regard to his conversation with Ewing, of the firm of Calhoun & Co., if anything was said in relation to the chattel mortgage upon the steamer, and replied:

"I told him that I had to have $3,500 of it written up to Captain MacFarland, of Everett; that I could not promise him that insurance; that I did not know whether he wanted me to insure with Seattle firms or not; likely he might want the same men that insured the year before in Everett; and $6,500 for my mother. Q. What reason, if any, did you give him for the necessity of having insurance written in favor of or payable to Captain MacFarland? A. That he held the mortgage on the steamer for that amount."

And in an interview with Mr. Calhoun a few days later he stated the following language was used:

"He (Calhoun) asked me then how much I wanted to insure for, and I told him the whole amount was $10,000. $3,500 of it was to go to Captain MacFarland, of Everett, and $6,500 to Mrs. Powers. I told him I could not promise him the $3,500 until I seen Captain MacFarland,—whether he wanted to have it or not,—but the $6,500 he could have; and he said, 'All right.' He says, 'You try and get the $3,500 for me from Captain MacFarland, and I will write the whole $10,000.' I told him, 'All right;' I would see Captain MacFarland, and see what I could do for him. He asked me what I wanted to insure $3,500 with MacFarland for. I told him he had the mortgage on the boat for that amount. He said he would go ahead and write up the $10,000 just as soon as I could see Captain MacFarland, whether he would get the $3,500 or not. If he could get MacFarland, he would write up the $10,000."

Digitized by Google

Calhoun testifies:

"Q. Did Captain Barrington say anything to you, at the time the insurance was being negotiated, about having to protect the mortgage by insurance? A. Yes, sir. Q. What mortgage did he state? A. He said the mortgage for the purchase price,—the balance of the purchase price of the boat to Captain MacFarland and others. I do not know the names of the others. * * * Q. You know there was a mortgage? A. Yes, sir. Q. And yet you allowed these policies to be delivered without any permission for a mortgage on them? A. Yes, sir. Q. Had you given any notice to anybody about a mortgage? A. Yes, sir; to Mr. McKenzie. The reason that that indorsement was not on that policy was because Barrington did not know the names of the mortgagees, and I told him that we would explain the matter to the agents, and arrange with them so that the indorsement could be made afterwards. * * * Q. I understand you to say that the reason why you let the policy go out was because you had an agreement with Captain Barrington that later on that chattel-mortgage clause would be indorsed on the policy? A. I had both that with Captain Barrington and the agent. Q. You had that agreement with Captain Barrington and the agents? A. Yes, sir."

Ewing, of Calhoun & Co., testifies that during the negotiations Capt. Barrington spoke about an insurance of $3,500 for the protection of Capt. MacFarland, and that he at one time told him he contemplated placing more than $6,500 insurance on the steamer.

With regard to concurrent insurance, McCormick, the agent placing the insurance in favor of the mortgagee, testified that he was present in the drug store of Yorke A. Barrington on the 24th day of January, 1896, when Capt. Barrington had a conversation over the telephone with some person regarding insurance on the steamer Cricket, and heard him say to this party, "I have concluded to have Mr. McCormick write $3,500 of this insurance," and request the person at the other end of the telephone to deliver the policies for the other insurance; that at the close of this conversation Capt. Barrington placed an order with the witness for $3,500 insurance, and said he had given orders to Mr. Calhoun for $6,500,—making a total insurance of $10,000.

Yorke A. Barrington, a brother of Capt. Barrington, testified, with relation to the same conversation by telephone:

"He asked for Calhoun, and he talked with a gentleman, and he told them that he could go ahead with the $6.500 insurance, and that he had decided to give McCormick $3,500, and my brother turned, and asked what company he represented, and McCormick said the Hartford, and he communicated that to the gentleman at the other end of the 'phone; and then, when he got through with the conversation, he turned to McCormick, and told him that he should write up the $3,500."

From this testimony it appears that there was evidence sufficient to go to the jury tending to establish the fact that at the time the policy of insurance was issued and delivered to Barrington, the agent of the insured, Calhoun & Co., the insurance agents, had notice and knowledge of the existence of the mortgage and of the additional concurrent insurance. There was also evidence tending to establish the fact that McKenzie, the agent of the defendant, had notice of the mortgage, and that the name of the mortgagee was to be inserted in the policy afterwards.

Under the weight of authority, the defendant is estopped from asserting the invalidity of its policy for violation of the conditions of

Digitized by Google

the policy, if such alleged violation was known by the defendant at the time of its issue. Mesterman v. Insurance Co., 5 Wash. 524, 32 Pac. 458. "If the agent knew of the other insurance when the contract was entered into, it is not only a waiver of notice, but also of a forfeiture on that ground." Wood, Ins. § 406. In Beebe v. Insurance Co., 93 Mich. 514, 53 N. W. 818, it was held that where the agent of the insurance company, with knowledge as to the amount of incumbrance upon property insured, misstated such amount in an application for insurance made out by him, and which plaintiff, without reading, signed, and the agent assured plaintiff that the application was all right, and that she was fully protected, the defendant company could not deny its liability under a provision of the policy that the application was a warranty as to the material facts, and that a misstatement would void it; the company being presumed to have the knowledge of its agent. The same doctrine is upheld in Wood v. Insurance Co., 149 N. Y. 382, 44 N. E. 80, where the court of appeals say:

"The restrictions inserted in the contract upon the power of the agent to waive any condition unless done in a particular manner, cannot be deemed to apply to those conditions which relate to the inception of the contract, when it appears that the agent has delivered it and received the premiums with full knowledge of the actual situation. To take the benefit of a contract with full knowledge of all the facts, and attempt afterwards to defeat it, when called upon to perform, by asserting conditions relating to those facts, would be to claim that no contract was made, and thus operate as a fraud upon the other party."

In Robbins v. Insurance Co., 149 N. Y. 477, 44 N. E. 159, the policy of insurance upon certain personal property contained a condition that the entire policy, unless otherwise provided by agreement indorsed thereon, or added thereto, should be void if the subject of insurance be personal property, and be or become incumbered by a chattel mortgage. It also contained the other provisions usually contained in the standard fire insurance policy, among which was a provision making the policy subject to the stipulations and conditions contained in it, and also a provision to the effect that no officer, agent, or other representative of the company should have power to waive any condition or provision of the policy, except such as might, by the terms of the policy, be subject to the terms indorsed thereon or added thereto, and that as to those provisions and conditions no officer, agent, or representative should be deemed or held to have waived any of them, unless the waiver was written upon the policy. When the policy was issued there was a chattel mortgage upon the property insured, but there was no indorsement upon the policy with respect to it. The soliciting agent who procured the insurance was, however, informed as to the mortgage. When the testimony was closed, the defendant's counsel asked the court to direct the jury to return a verdict for the defendant, on the ground that at the time of the issuing of the policy the property insured thereby was incumbered by a chattel mortgage, and that there was no agreement indorsed upon the policy, or added thereto, in reference to such chattel mortgage. The motion was denied, and a verdict and judgment entered in favor of the plaintiff. On appeal to

Digitized by Google

the court of appeals that court determined that it would be presumed, if anything had been omitted which it was necessary to do to make the policy valid, it was by mistake, or that the condition was waived, or that the defendant company held itself estopped from setting it up. It was accordingly held that the company was barred from claiming that the policy was invalid because of the existence of the chattel mortgage.

Notwithstanding an insurance policy contains a proviso against additional insurance except upon "the consent of this company written hereon," and provides also that "the use of general terms, or anything less than a distinct specific agreement, clearly expressed, and indorsed upon this policy, shall not be construed as a waiver of any printed or written conditions or restriction therein," yet where an agent with whom all the dealings were had, and whose authority is not shown to have been restricted in any way, has so acted as to have bound himself by way of estoppel not to dispute the validity of certain additional insurance on the point of consent, the company will be likewise bound. Insurance Co. v. Earle, 33 Mich. 144. Insurance Co. v. Spiers, 8 S. W. 453, was a case where additional insurance had been procured without the assent of the original insurer being indorsed upon the back of the policy, as provided by the terms of the policy. The court of appeals of Kentucky, in passing upon the points involved, say:

"It has been held in some few cases that, where the policy provides for a forfeiture in case of additional insurance without the written consent of the insurer indorsed upon the policy, it can only be waived by a literal compliance with the condition. The decided current of authority, however, is that this waiver may arise from the act or conduct of the insurer; and silence for an unreasonable time upon his part, after notice or knowledge of the breach of the condition, will constitute such conduct. * * * The term 'void,' as used in the policy, is to be regarded as meaning that the insurer may, at his exclusive option, treat it so, and not that the contract becomes an absolute nullity as to either party. The insurer may therefore, by his conduct, waive his right of forfeiture, and estop himself from insisting upon it. Baer v. Insurance Co., 4 Bush, 242. * * * It may now be regarded as settled law that insurance companies may, by conduct or parol agreement, waive it [condition of forfeiture], and become estopped from enforcing what is but a conventional condition of forfeiture. Insurance Co. v. Shea, 6 Bush, 174; Von Borles v. Insurance Co., 8 Bush, 133; Insurance Co. v. McCrea, 8 Lea, 513."

In the case of Insurance Co. v. Warttemberg, 48 U. S. App. 344, 24 C. C. A. 547, and 79 Fed. 245, in this court, a portion of the property insured was incumbered by a mortgage for $1,000 at the time of the insurance. The insured testified that he stated the facts concerning the incumbrance to the insurance agent, but an answer different from that which he gave was written in the application for the insurance by the agent, and assented to by the insured. This answer did not disclose the mortgage. The application contained the following condition:

"It is expressly understood and agreed that the valuation of all the property herein described is made by the applicant, and, if this blank be filled out by the agent, it is done at dictation of applicant, and every statement herein contained is to be deemed his own. This company will be bound by no statement made to or by the agent, unless embodied in writing herein."

Digitized by Google

The policy also contained the following:

"This insurance is based upon the representation contained in the assured's application of even number herewith on file in the company's office in San Francisco, each and every statement of which is hereby specifically made a warranty, and a part hereof; and it is agreed that, if any false statements are made in said application, this policy shall be void. * * * No agent or employé of this company, or any other person or persons, have power or authority to waive or alter any of the terms or conditions of this policy, except only the general agents at San Francisco; and any waiver or alteration by them must be in writing."

The property insured was farm property. It appeared from the testimony of the agent that he had authority to write commercial risks for the company, but no authority to write insurance on farm risks. On the submission of the case to the jury the defendant requested the court to instruct the jury to return a verdict for the defendant. The request was denied, and the jury returned a verdict for the plaintiff. The case was brought here on a writ of error, and it was contended by the plaintiff in error that the court erred in not instructing the jury upon the evidence to find a verdict for the defendant. It was held that, as there was nothing to show that the insurance company would have declined the risk if it had been aware of the fact that a portion of the property insured was under a temporary incumbrance, and nothing to show that either the insured or the agent perpetrated any fraud upon the insurance company, the latter could not avoid the policy by the defense that the insured, in his written application, had falsely warranted that the property insured was not incumbered. The doctrine of this case necessarily includes the rule that the information obtained by the agent concerning the risk will be imputed to the company accepting the services and representations of the agent in securing the insurance contract; but, aside from this principle, applicable to both cases, the two cases are to be distinguished in matters favorable to the validity of the policy under consideration. In the case at bar there is not a particle of evidence tending to show that the insured, either by statement or assent, was guilty of any fraud or deception in representing the condition of the property or the concurrent insurance. On the contrary, there is evidence tending to show that the agent of the company at Seattle was notified by the agent who effected the insurance that the property was incumbered by a mortgage; and there was also evidence tending to show that the agent who effected the insurance had knowledge of the concurrent insurance on the mortgagee's interest.

Defendant also raises the question whether a policy of insurance may be varied by parol, despite any provision to the contrary contained in the instrument. A leading case upon this point is Insurance Co. v. Norwood, 16 C. C. A. 136, 69 Fed. 71. Caldwell, circuit judge, therein declares the early doctrine on this subject, as maintained in the case of Carpenter v. Insurance Co., 16 Pet. 495, has been so generally denied and repudiated by the courts of the country that it has come to be regarded as obsolete. He says:

"It is contended that consent to other insurance cannot be proved by oral evidence—First, because the policy provides that it shall be in writing, indorsed

Digitized by Google

on the policy; and, second, because it would violate the rule against the reception of oral evidence to contradict or vary a written instrument. But it has been authoritatively decided that a contract of insurance is not within the statute of frauds, and may be by parol (Commercial Mutual Marine Ins. Co. v. Union Mut. Ins. Co., 19 How. 318; Insurance Co. v. Shaw, 94 U. S. 574; Henning v. Insurance Co., 2 Dill. 26, Fed. Cas. No. 6,366); and if it can be made by parol it may be varied by parol. Parties to contracts cannot disable themselves from making any contracts allowed by law in any mode the law allows contracts to be made. A written contract may be changed by parol, and a parol one changed by a writing, despite any provisions in the contract to the contrary."

In Insurance Co. v. Wilkinson, 13 Wall. 222, Mr. Justice Miller refers to the great value of the rule of evidence that a written contract cannot be varied by parol testimony, but further says:

"But experience has shown that in reference to these very matters the rule is not perfect. The written instrument does not always represent the intention of both parties, and sometimes it fails to do so as to either; and where this has been the result of accident, or mistake, or fraud the principle has been long recognized that under proper circumstances, and in an appropriate proceeding, the instrument may be set aside or reformed, as best suits the purposes of justice. A rule of evidence adopted by the courts as a protection against fraud and false swearing would, as was said in regard to the analogous rule known as the 'Statute of Frauds,' become the instrument of the very fraud it was intended to prevent, if there did not exist some authority to correct the universality of its application. It is upon this principle that courts of equity proceed in giving the relief just indicated; and though the courts, in a common-law action, may be more circumscribed in the freedom with which they inquire into the origin of written agreements, such an inquiry is not always forbidden by the mere fact that the party's name has been signed to the writing offered in evidence against him."

To the same effect is Association v. Wickham, 141 U. S. 564, 12 Sup. Ct. 84, where the court say:

"We have no disposition to overrule or qualify in any way the general and familiar doctrine enforced by this court in repeated decisions from the case of Hunt v. Rousmanier's Adm'rs, 8 Wheat. 174, decided in 1823, to that of Seitz v. Refrigerating Co. (decided at the present term) 141 U. S. 510, 12 Sup. Ct. 46, that parol testimony is not admissible to vary, contradict, add to, or qualify the terms of a written instrument. The rule, however, is subject to numerous qualifications, as well established as the general principle itself, among which are that such testimony is admissible to show the circumstances under which the instrument was executed." Insurance Co. v. Gray, 43 Kan. 497, 23 Pac. 637; Haas v. Insurance Co. (Sup.) 1 N. Y. Supp. 895; Insurance Co. v. Earle, supra; Insurance Co. v. Wilkinson, supra.

Parol evidence is admissible to show that the statements given by the insured to the agent of an insurance company were different from those he transcribed in the application he sent to the company. Insurance Co. v. Pearce, 39 Kan. 396, 18 Pac. 291.

The case of Pechner v. Insurance Co., 65 N. Y. 195, was somewhat similar to the case at bar. The main question was whether the policy was void because there was other insurance upon the property without the written consent of the defendant. The jury found a verdict for the plaintiff, under an instruction from the court upon parol evidence. Defendant assigned the ruling as error, claiming that parol evidence could have no influence upon the contract. The court of appeals affirmed the ruling of the lower court in these words:

Digitized by Google

"This claim is, however, a misapplication of that rule, which is a cardinal one in construction, and simply designed to ascertain the true meaning and intent of a contract, which all parties concede to be valid. It has no application where the validity or existence of the contract itself is in question. It is familiar law that a written instrument may be shown to be void by parol evidence. It may be thus attacked and overthrown for fraud, illegality, want of consideration, or other vice going to the existence of the instrument. If it can be so attacked, it can be sustained in the same manner."

Defendant, however, contends that any knowledge Calhoun & Co. may have had cannot be imputed to the defendant, for the reason that Calhoun & Co. were not its agents in effecting the insurance in this case. The policy in question provides: "In any matter relating to this insurance, no person, unless duly authorized in writing, shall be deemed an agent of this company." This provision was not carried out literally with regard to Calhoun & Co., but it is a well-settled rule in the law of agency that the acceptance and approval by the company of the acts of another in behalf of the company constitute a recognized agency. No communication, either written or verbal, passed between the defendant and the insured, touching the issuance of the policy, but the company issued the policy upon the representations of Calhoun & Co., and in pursuance of business methods customary between them; thus ratifying the action of Calhoun & Co. in its behalf, and justifying the conclusion that they were the agents of the defendant in error.

"Where one, without objection, suffers another to do acts which proceed upon the ground of authority from him, or by his conduct adopts and sanctions such acts after they are done, he will be bound, although no previous authority exist, in all respects, as if the requisite power had been given in the most formal manner. If he has justified the belief of a third party that the person assuming to be his agent was authorized to do what was done, it is no answer for him to say that no authority had been given, or that it did not reach so far, and that the third party had acted under a mistaken conclusion. He is estopped to take refuge in such a defense." Bronson's Ex'r v. Chappell, 12 Wall. 681; Lamberton v. Insurance Co., 39 Minn. 129, 39 N. W. 76; Abraham v. Insurance Co., 40 Fed. 717.

"An agent who solicits the insurance, takes the application, receives the premium, and delivers the policy, may, in our opinion, by his conduct or acts, bind his company by way of waiver of a forfeiture on account of additional insurance, in the absence of knowledge upon the part of the assured that his powers in this respect have been restricted. This being so, it follows that the knowledge of the agent, under such circumstances, is to be imputed to the company." Insurance Co. v. Spiers, supra.

In Insurance Co. v. Pearce, supra, the question involved the power of an insurance solicitor to bind the company. Beals was canvassing for business for the insurance company, and induced Pearce to insure with it. When the application was taken, the solicitor wrote down all of the answers, and read over a part of them to Pearce, who signed them, without knowing all the answers that were in the application. Some of the statements written were false, and, upon a loss occurring, the insurance company denied its liability, claiming the policy to be void, in conformity with the following provision of the policy:

"This indemnity contract is based upon the representations contained in the application, of even number herewith, and which the assured has signed, and permitted to be submitted to this company, and which is made a warranty, and

Digitized by Google

a part hereof; and it is stipulated and agreed that, if any false statements are made in said application, * * * this policy shall be null and void."

The company also disclaimed liability for the acts of Beals, stating that he was merely a solicitor, with power only to take and forward applications. In the lower court the jury rendered a verdict for the insured, and the supreme court affirmed the judgment of that court, saying:

"The company did make him [Beals] its solicitor, and it must be presumed that he was given full power to take applications and give such information to the company as he might obtain either from the applicant or from other sources. For this purpose, at least, he was the agent of the company, with full power; and if he wrote down false statements after he had been truthfully informed by the applicant, and after a personal inspection of the premises, the assured should not suffer for his misrepresentations. * * * We are of the opinion that after the defendant had received the premium of the plaintiff, and issued him a policy, that it was estopped from denying the truth of the statement filled in by its own agent in the application of plaintiff. The knowledge that Beals possessed was, for the purposes of this action, the knowledge of the company. He was acting as its agent, and it was his especial duty to ascertain the actual facts about the risk, as the company made him its agent for that purpose. * * * The current of the later authorities seems to be that the agent who takes the application and obtains the policy must be regarded for those purposes as having full power to act for and bind the company; and, after having received money from the insured, it cannot be heard to say that the statements in the application were false, when there was no fraud or attempt to deceive and misrepresent on the part of the assured."

It is a well-known custom now for insurance companies to accept applications for insurance through the medium and agency of insurance agents or solicitors, who procure the applications, and place the insurance with such companies as they may determine. These solicitors are furnished by the insurance company with printed arguments in favor of the special advantages offered, and stimulating the solicitors or agents to activity by the payment of large commissions on premiums obtained. The party who is thus induced to take out a policy knows little or nothing about the company or its officers, but relies upon the agent who has persuaded him to effect the insurance as the representative of the company for all purposes of the contract, and certainly has the right to so regard him. The companies have endeavored to establish the doctrine that they can limit the responsibility for the acts of these agents to the receipt of the premium and delivery of the policy, and as to all other acts of the agent he is the agent of the assured. Some of the earlier decisions have supported this doctrine, but the tendency of modern decisions is steadily against it. The testimony shows that both Calhoun & Co. and McKenzie were engaged in business in the city of Seattle as insurance agents; that it was customary among the various insurance agents of Seattle to place business with each other at times; that in accordance with that custom Calhoun & Co. dictated and made the terms of the contract in controversy; that upon receipt of the order for insurance from Barrington, Calhoun & Co. placed $3,000 thereof with McKenzie, who at once issued the policy of the defendant for that amount in favor of plaintiff's assignor, and returned the policy to Calhoun & Co.; that Calhoun & Co. then pasted on the back of the policy a

Digitized by Google

printed slip containing their business card, and delivered the policy, together with that of the Palatine Company, to Barrington, collecting a portion of the premium at that time. Such acts tended to establish the fact that Calhoun & Co. were the agents of the defendant in this transaction, and the evidence should have been submitted to the jury under proper instructions. Fidelity & Casualty Co. v. Egbert, 55 U. S. App. 200, 28 C. C. A. 281, and 84 Fed. 644; Insurance Co. v. Wilkinson, supra; Pitney v. Insurance Co., 65 N. Y. 6; Giddings v. Insurance Co., 90 Mo. 272, 2 S. W. 139. It may be said that the insured should have ascertained the correctness of the policy upon receiving it. Barrington, who acted for the insured in the matter, testified that he did open the policy, and note the company insuring, and the amount of insurance, but nothing more. It would certainly have been an act of prudence on his part to read the entire policy, but his neglect to do so cannot excuse the company for the default of the agent in not writing the contract in accordance with the representations made by the insured. The insured had a right to rely upon the agent's performing his duty of making the contract in conformity with the information given; and the agent's failure to do so, whether the result of a mistake or of a deliberate fraud, cannot operate to the prejudice of the insured. The contract of insurance is pre-eminently one that should be characterized by the utmost good faith on both sides. Insurance Co. v. Norwood, supra. In Kister v. Insurance Co., 128 Pa. St. 553, 18 Atl. 447, a policy was issued upon an application in which the agent had written down answers other than those given him by the applicant, and the insured signed the application in ignorance of this fact. The supreme court said:

"A copy of the application accompanied the policy, and it is argued that Kister [insured] could and ought to have read it, and, if he had done so, he would have seen the answers were untrue. These are considerations which were properly addressed to the jury. We cannot say that the law, in anticipation of a fraud upon the part of a company, imposed any absolute duty upon Kister to read his policy when he received it, although it would certainly have been an act of prudence on his part to do so. [Citing cases.] One thing is certain, however: the company cannot repudiate the fraud of its agent, and thus escape the obligations of a contract consummated thereby, merely because Kister accepted in good faith the act of the agent without examination."

"Plaintiff had a right to rely upon the assumption that his policy would be in accordance with the terms of his oral application. If the defendant desired to make it anything different, it should, in order to make it binding upon plaintiff, under the authorities in this state, have called his attention to those clauses which differed from the oral application." Gristock v. Insurance Co., 87 Mich. 428, 49 N. W. 634; Bennett v. Insurance Co., 106 N. Y. 243, 12 N. E. 609.

Upon the law as stated, and a review of the evidence, it is clear that questions of fact were presented which should have been submitted to the jury. The judgment of the circuit court is therefore reversed, and the cause remanded, with instructions to grant a new trial.

Digitized by Google

(94 Fed. 1002.)

UNITED STATES v. REISINGER.

(Circuit Court of Appeals, Second Circuit. May 25, 1899.)

No. 159.

CUSTOMS DUTIES—CLASSIFICATION—STICKS OF CARBON.

Carbon sticks, 36 inches long, intended for ultimate use in electric lighting, but which require to be cut into suitable lengths, the ends of which must be pointed or ground, before they can be so used, are dutiable under paragraph 97 of the tariff act of 1897, as articles or wares composed wholly of carbon, not specially provided for, and not under paragraph 98, as carbons for electric lighting.

Appeal from the Circuit Court of the United States for the Southern District of New York.

This cause comes here upon appeal from a decision of the circuit court, Southern district of New York, reversing a decision of the board of general appraisers, which reversed a decision of the collector of the port of New York touching the assessment of duty upon certain imported merchandise. The facts appear in the opinion.

D. Frank Lloyd, for the United States.

W. Wickham Smith, for appellee.

Before WALLACE, LACOMBE, and SHIPMAN, Circuit Judges.

PER CURIAM. This cause arises under the tariff act of 1897. The relevant paragraphs are found in Schedule B, "Earths, Earthenware, and Glassware," and read as follows:

"(97) Articles and wares composed wholly or in chief value of earthy or mineral substances or carbon, not specially provided for in this act, if not decorated in any manner, thirty-five per centum ad valorem; if decorated, forty-five per centum ad valorem.

"(98) Gas retorts, three dollars each; lava tips for burners, ten cents per gross and fifteen per centum ad valorem; carbons for electric lighting, ninety cents per hundred; filter tubes, forty-five per centum ad valorem; porous carbon pots for electric batteries without metallic connections, twenty per centum ad valorem."

It is contended by the collector that the articles are covered by paragraph 98, as carbons, rods, or sticks for electric lighting. Inasmuch as they were 36 inches long, "which length," he asserts, "is equal to three carbons of the extreme length for electric lighting," the collector assessed them at the rate of $2.70 per 100 sticks. The board of general appraisers held that they should be classified under paragraph 97. The circuit court held that the collector's classification was correct, but that he should have assessed them at 90 cents per 100 only. 91 Fed. 638. No testimony was taken in the circuit court. The findings of fact returned by the board of general appraisers are supported by the evidence before them, and read as follows:

"(1) The goods consist of sticks or rods of carbon, imported in lengths, respectively, of 36 inches.

"(2) The articles are not suitable or capable of being used for electric lighting in the lengths and condition in which they are imported, but, in order to adapt

Digitized by Google

them for such use, it is necessary to cut them up into shorter lengths, to point some of them, and smooth or grind the ends of others.

"(3) Prior to July 24, 1897 (the date of the present tariff act), carbons of these lengths were not imported into this country. They were then imported commonly in lengths varying from 4½ to 14 inches, and occasionally as long as 16, and perhaps 20, inches; the greater number being 12 inches long."

Accepting these findings as correct, we concur in the conclusion of the board that, although ultimately intended for electric lighting, the fact that it is necessary to bestow further labor on them, in order to fit them for such use, precludes their inclusion in paragraph 98. Inasmuch as they are not specifically provided for in paragraph 98, they come within the general phraseology of paragraph 97, being "articles or wares composed wholly of carbon." This paragraph, it should be noted, is changed from the similar one, in the act of 1894 (paragraph 86), which was recently considered by us in U. S. v. Reisinger (Dec. 7, 1898) 33 C. C. A. 395, 91 Fed. 112, by the insertion of the word "carbon." The decision of the circuit court is therefore reversed, and that of the board of general appraisers is affirmed.

(94 Fed. 1011.)

HAWGOOD & AVERY TRANSIT CO. v. DINGMAN et al.

BARRY TOWING & WRECKING CO. et al. v. INTER-OCEAN COAL & COKE CO. et al.

(Circuit Court of Appeals, Eighth Circuit. May 9, 1899.)

Nos. 1,149, 1,150.

1. MARITIME LIEN—SUIT TO ENFORCE—EFFECT OF RELEASE ON BOND.
   A release to a claimant under an appraisal and stipulation or bond, not made under the limited liability act, of a part of the res seized under a libel in admiralty has the same effect upon the liens upon the part released that a discharge of the entire res under a like appraisal and stipulation or bond would have had upon the liens upon the whole thing, which is to discharge the liens of those who were parties to the proceeding when the release was made, but no others.

2. SAME—INCONSISTENT CLAIMS.
   An intervener in a suit to enforce liens against a vessel, who claims ownership of a part of the property libeled, and obtains its release on appraisal and bond, cannot, by subsequently setting up a claim to a lien in his own behalf, become entitled to share in the proceeds of the bond and the remaining property.

3. SAME—NECESSITY OF CROSS LIBEL.
   Respondents in a suit to enforce maritime liens are required to file cross libels, to take out process, and have it served in the usual way, if they have liens which they wish to enforce, and cannot obtain such relief by merely pleading their claims in their answers.

Appeals from the District Court of the United States for the District of Minnesota.

These are appeals from two decrees in admiralty rendered in proceedings against the steamer Belle P. Cross. On December 14, 1896, Gustave Herman, Ralph E. Herman, and Edward G. Ashley filed a libel in the court below against this steamer, her engine, boilers, tackle, apparel, and furniture. This libel was in the usual form, except that it contained an allegation that, after the supplies on account of which it

Digitized by Google

was filed had been furnished, the owner of the vessel had taken her engine, boilers, and machinery out of her hull, and had placed them in the steam tug G. A. Tomlinson. A monition issued on the libel, and the marshal arrested the hull of the Belle P. Cross, and also her engine, boilers, and machinery, which he found in the G. A. Tomlinson. On March 8, 1897, the appellant the Hawgood & Avery Transit Company petitioned the court for an appraisal of the engine, boilers, and machinery in the Tomlinson. An appraiser was appointed, and an appraisal thereof was made pursuant to a stipulation signed by the transit company, and all those who had then filed libels against the steamer Belle P. Cross or its engine, boilers, and machinery. This stipulation recited that it was made "for the purpose of fixing a value thereto, and to enable said property to be released under the provisions of rule 17 of this court and the statute in such case made and provided." The appraiser fixed the value of the engine, boilers, and machinery at $2,000. The transit company executed and filed a bond for this amount for the benefit of "whom it may concern," conditioned that if that company should abide by all the orders of the court, and pay the amount awarded by the final decree, the bond should be void. Upon the filing of this bond, and on March 10, 1897, the engine, boilers, and machinery were released and surrendered to the transit company pursuant to an order of the court to that effect. But the hull of the steamer Belle P. Cross remained in the possession of the marshal. After this release, and on April 3, 1897, the Inter-Ocean Coal & Coke Company filed an intervening libel against the Belle P. Cross and her boilers, engine, and machinery, and caused the engine, boilers, and machinery to be again arrested in the tug Tomlinson under a monition issued upon this libel. On September 4, 1897, the Barry Towing & Wrecking Company, which had succeeded to the title of the transit company, filed a claim for this engine, these boilers, and this machinery, and gave a bond in the sum of $2,329.66 to R. T. O'Connor, the marshal of the district, which recited the filing of the intervening libel and the seizure of the engine, boilers, and machinery thereunder, and was conditioned that the wrecking company should abide by and perform the decree of the court in relation to the claim of the coal and coke company. On September 11, 1895, the wrecking company filed an answer to the intervening libel, in which it set forth the prior proceedings, which we have detailed, alleged that it had bought the engine, boilers, and machinery for value, and without notice, on April 1, 1897, that it was the owner thereof, and that the release of March 10, 1897, discharged this property from all maritime liens. Meanwhile the hull of the steamer Belle P. Cross had been condemned and sold, and the proceeds of the sale, which were only $310, had been paid into the registry of the court. Upon the final hearing the court below entered two decrees, one to the effect that the money in the registry of the court and the proceeds of the bond of the transit company of March 4, 1897, should be distributed among those who had filed their libels prior to March 10, 1897, and the other to the effect that N. J. Trodo, who had become the assignee of the coal and coke company, should have summary judgment for $1,333.53 and interest, the amount of that company's claim, against the Barry Towing & Wrecking Company and the sureties upon its bond of September 4, 1897. From these decrees the transit company and the wrecking company have appealed.

Harvey D. Goulder (F. E. Searle and H. R. Spencer, on the brief), for appellants.

Isaac N. Huntsberger and Roger M. Lee (John H. Norton and Francis W. Sullivan, on the brief), for appellees.

Before CALDWELL, SANBORN, and THAYER, Circuit Judges.

SANBORN, Circuit Judge, after stating the facts as above, delivered the opinion of the court.

The questions presented in this case turn upon the legal effect of the discharge of the engine, boilers, and machinery upon the ap-

Digitized by Google

praisal and bond on March 10, 1897. If that discharge released this property from the maritime liens of those who had not then filed their libels in the court below, the decrees were erroneous; but if it left these liens unimpaired, and discharged the property from the liens of those who were then parties to the proceedings only, they were right. The theory of the appellants is that the bond of March 4, 1897, became a substitute for the engine, boilers, and machinery as to all who claimed maritime liens upon this property, whether they had presented their liens in the court below or not when the bond was given and the machinery was released. Upon this theory they insist that the court erred in refusing to include the Inter-Ocean Coal & Coke Company, or its assignee, and the Hawgood & Avery Transit Company, among the distributees of the proceeds of that bond, although neither of them had filed any libel against or pleaded any lien upon the machinery or the vessel when this bond was given, and they contend that the seizure of the machinery under the subsequent libel of the coal and coke company and the decree that the wrecking company and the sureties on its bond shall pay the claim of that company are erroneous, because, as they say, the machinery was discharged of all maritime liens by the substitution of the earlier bond in its place on March 10, 1897. When a ship which has been arrested under a libel is released upon an appraisal and a deposit, or a bond, or a stipulation, not given under the limited liability act, the deposit or bond or stipulation is substituted for the vessel as to all those who have then filed their libels and become parties to the proceeding, but as to no other parties. The proceeds of the deposit, bond, or stipulation inure to the benefit of those who were parties to the proceeding when the release was made. But they inure to the benefit of no others. The vessel is discharged from the liens of these parties, and from their liens only. Lienholders who have not filed their libels, and have not become parties to the proceeding when the ship is discharged, may not be permitted to share in the proceeds of the deposit or bond or stipulation, and their liens are neither detached nor affected by the release. The vessel returns to the claimant subject to the maritime liens of all who were not parties to the proceeding before the discharge was made, and they may libel and arrest her to enforce their liens to the same extent and with the same effect as though she had never been seized before. Rev. St. §§ 940, 941; Adm. Rules, 11, 26; The Langdon Cheves, 2 Mason, 58, Fed. Cas. No. 8,063; The Union, 4 Blatchf. 90, Fed. Cas. No. 14,346; The Antelope, 1 Ben. 521, Fed. Cas. No. 481; The Haytian Republic, 57 Fed. 508, 509; Id., 154 U. S. 118, 14 Sup. Ct. 992; The Oregon, 158 U. S. 186, 15 Sup. Ct. 804. If the transit company in the case at bar had claimed both the hull and the machinery of the steamer, and had procured the appraisal and given the bond for the entire res, and the vessel and machinery had both been discharged thereunder, the right of the coal and coke company to subsequently libel her and to enforce its lien by seizure and sale of every part of the vessel and of the machinery could not have been successfully questioned under these authorities. The reason for this rule is that the maritime lien of that company had attached to every part of

Digitized by Google

the ship and to every part of her machinery before any libel was filed against her, and the acts of third parties in seizing her and releasing her on an appraisal and bond could not affect the right and lien of this company in its absence, and without its consent. On this ground all the authorities are that, if the entire thing had been libeled and discharged here, the lien of the coal and coke company would have remained untouched. How, then, could a discharge of a part of this thing have a greater effect than the release of the whole? Every reason which tends to support the lien of the absent holder when the entire thing is discharged pleads with equal cogency for its maintenance when only a part is released. The lien attaches to every part as much as to the whole. If one-half, two-thirds, or any other portion of the res is destroyed, the maritime lien still adheres to the remnant that has escaped, and no persuasive reason occurs to us why it should not hold as firmly every part which has been released from a seizure made by strangers to pay their debts. Any other rule would permit the first libelants and the owner to destroy the value of the liens of all others by an appraisal and discharge of the valuable part of the thing seized, leaving, as in this case, nothing but a worthless remnant for their satisfaction. Every consideration of reason and of equity demands that the same rule should apply to a discharge of a part which governs the release of the whole. Our conclusion is that a release to a claimant under an appraisal and stipulation or bond, not made under the limited liability act, of a part of the res seized under a libel in admiralty, has the same effect upon the liens upon the part released that a discharge of the entire res under a like appraisal and stipulation or bond would have had upon the liens upon the whole thing. The result of this conclusion is that there was no error in the decrees of the court below. The coal and coke company was not entitled to share in the distribution of the proceeds of the bond given by the transit company on March 4, 1897, as the claimant of the engine, boilers, and machinery, because it had not filed its libel when they were discharged under that bond. The transit company had no right to share in the proceeds of that bond as the assignee of the maritime lien of the Phenix Iron Works, because it had not filed any libel to enforce that lien, nor had it pleaded the same, or made any claim upon it in any way, when the engine, boilers, and machinery were discharged under that bond on March 10, 1897. The course of the transit company was this: It appeared on March 5, 1897, and filed a claim for the engine, boilers, and machinery, in which it alleged that it was the owner thereof. On March 6, 1897, it filed a petition for leave to intervene, in which it pleaded that it had an interest in the vessel by reason of a mortgage. But it was not until May 8, 1897, that it first presented to the court below the claim that it had a maritime lien which it had derived from the Phenix Iron Works. The engine, boilers, and machinery had then been discharged under the bond of March 4, 1897, and it was too late for the transit company to present a claim to share with the libelants who were parties to the cause on March 10, 1897, in the proceeds of a bond which they had secured for their own benefit. Not only this, but the transit company was prevented from as-

Digitized by Google

serting such a claim as against those libelants by the fact that it had induced them to accept its bond, and to return to it the engine, boilers, and machinery, by its silence regarding the maritime lien it now urges, and by its positive averment in its claim to the property that it was the owner of it. Chase v. Driver, 92 Fed. 780.[1] Moreover, the transit company did not present its claim to enforce this maritime lien in a libel or a cross libel. It merely pleaded it in its answer. When the machinery was released by the order of March 10, 1897, it undoubtedly went back to this company, subject to all the maritime liens that had not been presented to the court below before the property was discharged. That company might have filed a libel or a cross libel, and it might have caused this machinery to be arrested upon the maritime lien it now presses. But it could not have acquired any right to enforce that lien, or to share in the distribution of the proceeds of the engine, boilers, and machinery, or in the proceeds of a bond or a stipulation taken for them by other parties, by simply setting it forth in its answer. Respondents in a libel suit are required to file a cross libel, to take out process, and have it served in the usual way, if they have maritime liens which they desire to enforce. Ward v. Chamberlain, 21 How. 572, 574. The coal and coke company pursued the proper and legal course to enforce its lien. After the machinery had been released from the liens of all the libelants who had appeared in court before March 10, 1897, it caused the engine, boilers, and machinery to be arrested upon a monition issued upon a libel against the ship and its machinery, which it filed subsequent to that date. The decree of the court below that its lien existed, and that the wrecking company and its sureties were liable upon the bond which they gave to abide by and perform the decree upon this libel, was in accordance with the rules and principles of law to which we have referred, and both the decrees below must be affirmed. It is so ordered.

(94 Fed. 1017.)

THE FRED M. LAWRENCE et al.

(Circuit Court of Appeals, Second Circuit. May 25, 1899.)

No. 153.

ADMIRALTY—SUIT IN REM—PROCEDURE ON INSOLVENCY OF SURETY ON RELEASE BOND.

In a suit in rem for collision, where the vessel attached had been released on stipulation, on the insolvency of claimant's sureties an order was made pursuant to a rule of court requiring the claimant to furnish additional security, and, on a failure to comply with such order, the claimant's answer was stricken out, and a decree entered pro confesso for an amount of damages ascertained on a reference by a commissioner. *Held*, that the striking out of the answer and entry of the decree could not be deemed a punishment of the claimant for failure to obey the court's order, but was a proper procedure to bring to an end a proceeding in rem in which, through the fault of the claimant, the libelant had neither the res nor security.

---

[1] 34 C. C. A. 668.

Digitized by Google

Appeal from the District Court of the United States for the Eastern District of New York.

On September 30, 1893, a libel in rem was filed in the district court for the Eastern district of New York against the canal boat Fred M. Lawrence by the Union Marine Insurance Company to recover damages for a collision, and the vessel was attached, whereupon Elizabeth E. Hickok filed her claim as owner, and the value of the vessel was fixed by consent at $3,400. The said Hickok, Alfred Hamilton, and Edward M. Clarkson entered into a stipulation that, in case of default or contumacy on the part of the claimant or her sureties, execution for the agreed value, with interest thereon, might issue against their goods, chattels, and lands, and the vessel was released. The condition of the stipulation was, in substance, that, if the stipulators should at any time upon the interlocutory or final order or decree of the district court or appellate court, and upon notice to the proctors for the claimant, pay the money awarded by the final decree, the stipulation should be void. The claimant filed her answer on December 16, 1893. Nothing more was done in the case until April 16, 1898, when a motion was made, which was granted on June 8, 1898, that, by reason of the insolvency of the sureties, the claimant or her sureties should furnish better and sufficient security at a specified time, and, if not furnished, the answer should be deemed stricken out. This order was made by authority of rule 23 of the district court, which was made pursuant to section 913 of the Revised Statutes. Rule 23 is as follows: "In all cases of stipulations in civil and admiralty causes, any party having an interest in the subject-matter may at any time, on two days' notice, move the court on special cause shown for greater or better security; and any order made thereon may be enforced by attachment or otherwise." The order was not complied with, and on June 25th it was ordered that the answer should be deemed stricken out, and that the libel should be taken pro confesso against the claimant and her sureties, and should be referred to a commissioner to report the damages. Counsel for the claimant attended upon the reference and upon the commissioner's report, which found the damage to have been $3,260.39, and the interest thereon to be $970.65. A decree was entered that the libelant recover from the Fred M. Lawrence, the claimant, and the stipulators the amount thus found and costs, and that, unless the decree was satisfied within a specified time, the stipulators for costs and value on the part of the owner show cause within a specified time why execution should not issue against them. From this decree the claimant and the sureties have appealed, upon the ground that the district court was without authority to order that the answer should be stricken out, or that the libel should be taken pro confesso.

Philip Carpenter, for appellee.

Before WALLACE, LACOMBE, and SHIPMAN, Circuit Judges.

PER CURIAM. It is true that a court cannot deprive a defendant of the opportunity to appear, or, after a seasonable appearance, to defend, either as a punishment, or because he may be deemed to have forfeited such rights by any misconduct. In such case, "a sentence of a court pronounced against a party without giving him an opportunity to be heard is not a judicial determination of his rights." Windsor v. McVeigh, 93 U. S. 274; McVeigh v. U. S. 11 Wall. 259. The power of a court, which can punish for contempt, to strike the answer of a defendant from the files and render judgment against him, because he has been guilty of an aggravated contempt of court, was exhaustively examined and was denied in Hovey v. Elliott, 167 U. S. 409, 17 Sup. Ct. 841.

In this case the order that the libel be taken pro confesso was not a punishment, but was an order made upon the default of the claimant and her sureties, and the decree was upon an ascertainment of damages after the default. This is manifest from the

Digitized by Google

nature of the proceeding and of the stipulation. In a suit in admiralty in rem, the vessel, which is the offending thing, is the defendant. "The distinguishing and characteristic feature of such suit is that the vessel or thing proceeded against is itself seized and impleaded as the defendant, and is judged and sentenced accordingly." The Moses Taylor, 4 Wall. 411. Throughout the entire proceedings she is acting either in conformity with the rules of court or is in default. When the vessel, which is in the custody of the marshal, is permitted to be restored to the claimant upon his entering into a stipulation in a sum equal to the appraised value of the property, the stipulation "becomes a substitute for the thing itself, and, if judgment passes for the libelant, it is entered on the bond or stipulation, and execution issues accordingly," and the stipulators are liable for the consequences of a default. Lane v. Townsend, Ware, 289, Fed. Cas. No. 8,054; The Nied Elwin, 1 Dod. 53. The discharge of the vessel is so absolute that it was held by Justice Nelson that the court cannot order a rearrest when she has been fairly discharged on the customary stipulation (The Union, 4 Blatchf. 90, Fed. Cas. No. 14,346; The White Squall, 4 Blatchf. 103, Fed. Cas. No. 17,570); but the English authorities are not uniform on this subject (The Hero, Brown & L. 447; The Freedom, L. R. 3 P. C. 594). Therefore, when the vessel has been discharged, and the stipulation becomes worthless, the libelant is remediless, unless new security can be given, and the power of the district court to make a rule for the relief of libelants who are in this situation cannot be properly questioned. The Virgo, 13 Blatchf. 255, Fed. Cas. No. 16,976; The City of Hartford, 11 Fed. 89. In pursuance of the rule, an order was made in this case, with the result that the inability of the claimant and sureties to furnish better security was admitted and she was in default. The order for the ascertainment of damages was not a punishment, but was to enable the libelant to bring to an end a proceeding in rem in which, through the default of the claimant, it had neither res nor substitute. The undertaking of the stipulators was to answer for the default of the claimant, and they are liable accordingly. Todd v. The Tulchen, 2 Fed. 600. The decree of the district court is affirmed, with costs.

(95 Fed. 23.)

G. V. B. MIN. CO. v. FIRST NAT. BANK OF HAILEY.

(Circuit Court of Appeals, Ninth Circuit. May 2, 1899.)

No. 507.

1. CORPORATIONS—CONTRACTS—MANNER OF DOING BUSINESS.

Where the business of a corporation has habitually been transacted in an irregular manner, without observing the formalities legally required to bind it, with the knowledge and acquiescence of its stockholders, and it has in such manner made contracts and incurred obligations, the strict rules of law, however well settled, limiting the mode of exercising the powers of corporations by their officers, are not applicable to such contracts, as against third parties who have dealt with the corporation in good faith, and with knowledge of its manner of doing business.

Digitized by Google

2. SAME—POWERS OF OFFICERS—ESTOPPEL.

Where the president of a corporation is permitted to exercise full power and authority in the conduct and management of its business, and deals with the property and affairs of the corporation in such a manner and for such a length of time as to justify others with whom he transacts business in believing that he had authority to do the acts in the manner he does, such third persons have a right to deal with him on the assumption that he has such authority, and the corporation, having knowledge of such acts, and of the manner in which the corporate business is transacted, cannot thereafter, to the injury and prejudice of such parties, deny his authority or disaffirm his acts.

3. SAME—RETENTION OF BENEFITS.

A corporation which receives the benefit of money borrowed by its president, for which he executed the notes of the corporation, secured by a mortgage on its property, and which, with full knowledge of the facts, procures successive renewals of such notes through a number of years, cannot thereafter, for the first time, deny their validity.

4. SAME—MORTGAGES—CONSENT OF STOCKHOLDERS UNDER NEW YORK STATUTE.

2 Laws N. Y. 1892, c. 688, requiring the written assent of two-thirds of the stockholders as a condition precedent to the execution of a mortgage by a corporation, as construed by the courts of the state, was intended for the protection of the stockholders against the improvident or collusive acts of the officers in incumbering the property of the corporation; hence the form of assent by the stockholders is immaterial, if the intention is clear, and a mortgage executed in behalf of a corporation by its president, with the written indorsement thereon of the assent of another stockholder, who, together with the president, at the time owned more than two-thirds of the stock, is valid under such statute.

5. SAME—SEAL—ADOPTION OF SCROLL.

Where a mortgage executed in the name of a corporation recites that the seal of the corporation is affixed, and following the signature of the president is the symbol "[L. S.]," such symbol will be regarded as having been adopted and used for the occasion as the seal of the corporation, and the mortgage will not be held invalid, if in all other respects properly executed.

6. SAME—ULTRA VIRES.

The doctrine of ultra vires has no application to notes and a mortgage executed by the president in the name of a corporation which has power to execute such instruments, and the corporation may be estopped, by its subsequent conduct in ratification of the action of the president, to allege his want of authority or any informality in their execution to defeat its liability thereon.

Appeal from the Circuit Court of the United States for the District of Idaho.

This suit was instituted by the First National Bank of Hailey, in the state district court of Idaho, against the G. V. B. Mining Company, a corporation, to foreclose a mortgage executed June 12, 1895, upon the Red Elephant group of mines, situate in Blaine county, Idaho, for the sum of $6,500, evidenced by two promissory notes, with interest, costs, and attorney's fees. The cause was subsequently removed to the United States circuit court for the district of Idaho, and was there tried, and a decree entered in favor of the complainant, as prayed for in its bill of complaint. 89 Fed. 439.

The complaint, among other things, alleges: "That in said mortgage, as written, there is a clerical error in one of the 'calls,' in the description of the part of the 'O. K.' lode described, in failing to give the minute call of the last course in said description, which in the description herein given is corrected to conform to the fact; that said mortgage should be reframed to conform to the intention of the parties thereto, as above alleged, and the said Senator and Sumol lode claims be, by order and decree of this court, included in the property described in, and mortgaged by, the said mortgage, and included and embraced in the decree of foreclosure and sale in this action."

The answer of the G. V. B. Mining Company denied the existence of any indebtedness whatever. It denied the execution of the notes and mortgage

Digitized by Google

sued upon, or either of them; and further denied that it made any mistake in describing any property mortgaged to plaintiff, or omitted to include any property it intended to mortgage, or erred in any description or call in any mortgage, to plaintiff, or at all.

The general facts, as developed at the trial, were substantially to the effect that, prior to 1891, G. V. Bryan and G. W. Venable were, or claimed to be, the owners of the Red Elephant group of mines, although the interest of Venable therein was held in the name of George B. Howard. They kept an account with appellee in the name of "G. V. Bryan, Superintendent." On February 9, 1891, the G. V. B. Mining Company was incorporated, under the laws of the state of New York, with a capital stock of $500,000, divided into 5,000 shares. Bryan and Howard conveyed the Red Elephant group of mines to the corporation, and received in exchange all of its capital stock. Bryan received three-fourths, and Howard, representing Venable, one-fourth. Howard afterwards transferred the one-fourth to Venable, and Venable transferred 350 shares to one Heyman, and pledged 1,850 shares to Henry Aplington and R. J. Dean, as trustees for Mrs. H. K. Thurber. Bryan gave one share of his stock to one Donnelly, and another to Howard, so as to qualify them to act as directors of the corporation. On February 18, 1891, the stockholders met, and elected Bryan president, Howard secretary, and H. K. Thurber treasurer, and adopted by-laws, sections 7 and 8 of which read as follows:

"Sec. 7. The president shall preside at all meetings of the board of trustees, when present. In the absence of the president, the trustees may appoint a president pro tem. from their number. The president shall sign all certificates of stock and bonds, and may sign other obligations of the company. In the absence of the president, or in case of his inability to act, the trustees may appoint from their number a person to perform the duties of the president. The president shall perform all duties required by law, or that are usually performed by the president of a corporation.

"Sec. 8. It shall be the privilege of the president or treasurer to have the care and custody of the funds of the company, and to deposit the same in such bank or banks as the trustees may elect. The treasurer may sign all notes, checks, drafts, and orders for the payment of money made by the company. He or the president shall render a statement of his cash account at each meeting of the trustees, if required, and shall, at all reasonable times, exhibit his books and accounts to any trustee of the company upon application at his office. He shall countersign and affix the seal of the company to all certificates of stock signed by the president."

The articles of incorporation provided, among other things, that the objects for which said corporation was formed were to carry on the business of mining for gold, silver, etc., a part of its business to be carried on in Alturas (now Blaine) county, Idaho, and elsewhere in said state. On the 21st day of May, 1891, the directors held another meeting, and amended the by-laws so as to relieve Mr. Thurber from his duties as treasurer, and no other meeting was ever held by them, or anybody else, for the corporation, until September 16, 1895. After this incorporation, the business between the bank and the corporation was conducted in the same manner as before. Checks were drawn, and payments made thereon credited, nearly every day, until after June 12, 1895. There was never any controversy or suggestion as to the legality of these acts. None of the transactions was ever questioned by any party. Bryan borrowed money from time to time; overdrew his account; gave his notes, either as superintendent or president,—sometimes both. In other words, Bryan and Venable transacted the business of the corporation as if they were the sole owners thereof.

There is a sharp controversy arising out of a conflict or dispute in the testimony as to the number of shares of stock owned by Bryan and Venable, on June 12, 1895, at the time the mortgage was executed. Bryan, in answering an interrogatory upon this point in his deposition, said: "The only stock, to my knowledge, standing upon the books of the company, in any other name than that of myself and Mr. Venable, was 350 shares owned by the Heymans, and 2 shares which I gave to two gentlemen in New York to make them directors of the company. * * * I don't think there was any transfer on the books. If there was any transfer on the books, I didn't know of it. I don't think there could have been, without my knowledge." When H. K. Thurber

Digitized by Google

was on the witness stand, he was requested by appellant to refer to the stock book of the G. V. B. Mining Company, and from the book ascertain how the stock stood on June 12, 1895. Objection was made that the book was not competent. The court said that the book would show what stock was issued at certain dates, and that this might be shown, but that the evidence was not conclusive that the ownership of that stock continued for any length of time, and further said that no one could tell from that book where the stock was and who owned the shares at any given date. Appellant's counsel then asked the witness if he knew, of his own knowledge, "how the stock was owned on June 12, 1895." He answered, "I do, or very nearly." In reply to the question, "State, as near as you can," he said that Olive M. Bryan owned 1,000 shares; R. J. Dean and Henry Aplington, 1,850 shares; George V. Bryan, 498 shares; George W. Venable, 300 shares; Heyman, 350 shares; Dean, 1,000 shares; and the two odd shares make up the 5,000. This testimony was, of course, subject to the ruling of the court as to its effect. George W. Venable testified that, at the date the mortgage was executed, "Col. G. V. Bryan owned one-half; I owned a quarter; and my partner, Moses J. Heyman, owned a quarter." He further said that 1,850 shares of his stock were in the names of Henry Aplington and R. J. Dean, as trustees. "They held it as collateral security."

The weight of the direct testimony, notwithstanding some apparent discrepancies in the testimony of Mr. Venable, and all the surrounding circumstances of the transaction, establish the fact that Bryan and Venable, at the time the mortgage was executed, were unquestionably the owners of more than two-thirds of the capital stock. The agreement executed July 11, 1895, between Bryan and Venable, of the first part, and H. K. Thurber, of the second part, recites: "And whereas, the said parties of the first part are the principal stockholders in the G. V. B. Mining Company." There is no pretense that any change in the ownership of the stock took place after the mortgage was executed and the time of the signing of this agreement. The testimony shows that Bryan was a director of the bank from January, 1893, to January, 1896. He was present at the meeting when the question came up of taking a mortgage to secure the notes from the G. V. B. Mining Company. "He made his application for the loan, and then withdrew, and went away, and left the other members there to discuss the matter, and he took no part in the proceedings with reference to it at all." There is no testimony in the record tending to show any conspiracy or collusion between the bank and Bryan in any of the transactions between the bank and the mining company.

There is a mass of testimony in the record as to whether or not Bryan and Venable, in 1894, used any money upon mining claims not owned by the corporation. Without entering into any of the details of this testimony, it may be said that the testimony shows that some of the money obtained upon some of the notes given by Bryan as president was used by Bryan and Venable upon mines which they owned individually at Silver City, Idaho, and that appellee had some knowledge of that fact. The testimony fails to show that there was any fraud, conspiracy, or design on the part of the bank to defraud the corporation. On the other hand, the testimony shows that there was no bad faith on the part of the bank, and that the amount for which the mortgage was given was actually due from the corporation. R. F. Bullard, president of the appellee, upon this point testified as follows: "We had information from Col. Bryan, and it was a common rumor around and commonly reported, that Bryan and Venable were engaged in mining down at Silver City; that there was a claim that they were operating on,—the Tiptop and another claim. I never asked who owned the property. We never had any information—never made any inquiry—about that. We did not consider that it was any of our business. We thought they had a right to mine wherever they pleased; but we understood that they were spending quite a good deal of money down there at Silver City, although how much I could not say. We also understood that they were getting money from other sources,—Salt Lake and other places,—and investing it down there; but as to whether or not it belonged to the company, or was invested individually, we never were informed, and we did not consider that it was necessary to make any inquiries on that subject. * * * I never had the slightest idea of their using any money belonging to the company wrongfully. As we understood that they were the principal owners of the stock in the company, and they claimed that they were making a great deal of money at the

Digitized by Google

time, * * * we thought that whatever they were spending they had a right to spend, and that it belonged to them, out of the dividends or profits of the company, and they were managing that business for themselves, and we had nothing to do with it,—had no control over it at all. We thought that whatever they were doing they had a right to do."

The management having involved the property in debt, H. K. Thurber, on July 11, 1895, entered into a contract with Bryan and Venable, by which they agreed to procure an extension of time of payment from appellant's creditors, and that all its property should "be placed under the management, direction, and control of said H. K. Thurber, as general manager." An agreement was then procured from the creditors, including the appellee, by which they agreed to extend the time of payment of their claims, and to forego legal proceedings against the company, and that said "Thurber was to have full and exclusive charge and control of the property," and to make certain payments to the creditors from the proceeds of his operations. This contract was twice renewed, and was continued until April, 1897, during which time Thurber paid the creditors about 31 per cent. of their claims, and as late as January 18, 1897, by his letter to the appellee, proposed to continue such payments. An alleged meeting of the stockholders of the corporation was held at New York City on September 16, 1895, at 2 p. m., at which 1,850 shares of stock were voted for directors, but whose stock, or by whom voted, does not appear. This, however, is the same number of shares which was previously placed in the hands of Aplington and Dean by Venable as collateral security for a debt of $70,000, which he owed Thurber. It does not appear, with any degree of certainty, who was present at this meeting; but Aplington acted as chairman, and one George E. Field as secretary, and they and Nancy Thurber were elected directors. Immediately upon the adjournment of this meeting, and at the same place, a so-called "directors' meeting" was held, at which were present only said Field and Aplington, who elected themselves chairman and secretary of the meeting, and the following officers of the corporation were then elected, viz.: Nancy Thurber president, H. K. Thurber treasurer, general manager, and superintendent, and Aplington secretary, of the company. At this meeting it was ordered that H. K. Thurber, "as such general manager and superintendent," shall have charge of the property of said company, and manage and control the business and mines and property of said company, subject to the president (who was his wife) and the board of directors, composed of his wife, his nephew Aplington, and Field, neither of whom is shown to have been a stockholder. The next meeting was on February 3, 1897, when Field and Aplington alone met as a board of directors, and authorized "a proposed lease" of all the company's mines and property to Aplington, which, it otherwise appeared, had already been made by Nancy Thurber as president, and H. K. Thurber as treasurer, of the company, on January 1, 1897; and at the same meeting they ratified a prior sale by the president, Nancy Thurber, to Aplington, of all personal property of the company. February 10, 1897, a directors' meeting was held by Field and Aplington, at which Thurber was appointed resident agent upon whom legal process could be served. The same two parties next met as a board of directors on April 7, 1897, and ratified the assignment made on January 1, 1897, by Mrs. Thurber as president, and H. K. Thurber as treasurer, of the company, to Aplington, of all royalties arising from certain leases on the company's mines. On October 6, 1897, a stockholders' meeting was held, at which were chosen John C. Bouton, holding one share, chairman, and Field, secretary; whereupon resolutions were adopted condemning as unauthorized the notes and mortgage in suit, and empowering the president to resist this action, also, to "ratify, confirm, and approve" the lease, the sale, and the assignment of royalties to Aplington, above referred to, and then the meeting elected Bouton, Field, and Susan Venable directors. Upon the adjournment of this meeting, a directors' meeting was held, at the same place, at which were present Bouton, Field, and Susan Venable, when new officers were elected.

In this connection, it should be stated that, while the contract with the creditors to forbear legal proceedings above referred to remained in force, Aplington, on January 12, 1897, commenced his action in the state court against the corporation, service being made upon Thurber as agent, upon several notes given by him as treasurer at different dates, commencing July 12, 1895, and on January 28, 1897, recovered judgment by default for about $13,000. This judgment,

Digitized by Google

however, was afterwards set aside on an appeal taken by appellant herein. Applington v. Mining Co. (Idaho) 55 Pac. 241. In this suit four separate appeals have been taken,—one by appellant herein, one by appellee against Arthur Brown as intervener, one by Brown as an intervener, and another by Henry Aplington as an intervener. The appeals by the interveners and by appellee will be considered in a separate opinion. 35 C. C. A. 510, 95 Fed. 35.

A. F. Montandon, for appellant.

Lyttleton Price, for appellee.

Before GILBERT and ROSS, Circuit Judges, and HAWLEY, District Judge.

HAWLEY, District Judge, after stating the facts, delivered the opinion of the court.

We have stated the facts in this case at great length, in order that the general expressions in this opinion may be interpreted and understood in the light of all the circumstances disclosed by the record. The peculiar and irregular manner in which the business of the corporation, appellant herein, was transacted, necessarily leads to many complications, and presents several legal questions of an important character, as to how far such transactions can be upheld by the courts. Conceding, as we shall, for the purposes of this opinion, that the stockholders of the corporation might have objected to being bound by the acts of Bryan and Venable, if they had made timely objections thereto, the answer is that they did not make any such objections, and are not asking for any relief herein, except under the name of the corporation.

Can appellant take any advantage of its own wrong or of any of the irregular acts of its officers? Can it, after allowing Bryan and Venable to pursue the course they did, holding them out to the world as qualified to transact the business in the manner stated, be allowed to deny their authority? Should a court of equity visit their faults of omission or commission upon innocent parties who acted in good faith, honestly believing that Bryan and Venable had authority from the corporation? Do the facts show, as appellant claims, that the appellee had full knowledge of the true state of facts, and acted with its eyes wide open, knowing that the acts of Bryan and Venable were without authority of law? It may be admitted that the bank seems to have transacted business with Bryan and Venable in a careless manner, without much regard to strict banking principles; but it is not shown that, as against the G. V. B. Mining Company, or any of its stockholders, it has been guilty of any wrongdoing which, under the law, in the light of all the facts, will prevent it from maintaining this suit.

Before proceeding to a discussion of the interesting legal questions involved herein, we deem it proper to make some general observations as to the nature and character of the corporation that was formed by Bryan and Venable, conducted and managed by them until July 11, 1895, and afterwards by H. K. Thurber, because we are of opinion that, at the outset, some distinction ought to be made between genuine, bona fide corporations, organized for the legitimate purpose of conducting a business which requires a combination of persons and of capital, to make the business successful, as distin-

Digitized by Google

guished from the character of a corporation organized and conducted, as this was, with a view to conduct and carry on the business in the same manner and way as if no corporation, in fact, had been formed. In the early history of the transactions, Bryan and Venable were in fact the corporation. They acted in the same manner—transacted business in the same way—as well after, as before, the corporation was formed. The court ought not overlook these peculiar facts and conditions. In endeavoring to sustain and uphold a law made for the protection of innocent stockholders, we should be careful not to announce a doctrine that would permit the leading stockholders, under the guise of a corporate name, to commit frauds by taking advantage of their own wrong. While Bryan and Venable were directors in name, they were also the principal stockholders in fact, and were merely using the corporate name for the advantage and benefits which they might themselves derive therefrom.

We have said that Bryan and Venable constituted the corporation from the time of its organization up to, and at the time of, the execution of the notes and mortgage upon which this suit was brought, and it might be added that they continued as such until H. K. Thurber assumed the management and control. Venable thereafter acted with the Thurber party. In the light of the entire history of the corporation, as shown by the record in this case, it might be, perhaps, more properly said that Bryan, until July 11, 1895, by the consent of all parties interested and concerned, and H. K. Thurber thereafter, were to all intents and purposes the G. V. B. Mining Company; that, as was said by the circuit court, "the so-called directors and officers in New York constituted simply the dumb machinery, entirely directed by these parties, and through whom they operated when it was necessary to invoke the legal status of the corporation to strengthen their hands or advance their objects."

In the consideration of the legal questions herein presented, it must constantly be borne in mind that we are confining ourselves to the peculiar facts established by the evidence, as distinguished from the general principles applicable to the power of officers to bind the corporation. We are called upon to deal solely with exceptions to the general rule. In this view it becomes unnecessary to discuss the various authorities cited by appellant's counsel as to the general manner in which corporations are legally authorized to transact their business. The vital question is whether, from the manner in which the G. V. B. Mining Company transacted its business, it can take advantage of its acts against the appellee. We are of opinion that, from the facts, it cannot do so.

As to the power and authority of Bryan, as president, to incur the indebtedness and to give notes in the name of the corporation, but little need be added to the general observations heretofore stated. Courts must deal with persons and corporations as they find them dealing with each other. Where the president of a corporation is given full power and authority to conduct and manage its business, and deal with the property and affairs of the corporation in such a manner, and for such a length of time, as to justify others with whom he transacts business in believing that he had authority to do the

Digitized by Google

acts in the manner and way performed by him, the people with whom he transacts business have the right to deal with him upon the assumption that he has such authority; and the corporation, having knowledge of the exercise of such acts, and of the manner in which the corporate business was transacted, cannot thereafter, to the injury and prejudice of such parties, deny his authority, or disaffirm or set aside his acts. Merchants' Nat. Bank v. State Nat. Bank, 10 Wall. 604, 644; Martin v. Webb, 110 U. S. 7, 3 Sup. Ct. 428; Allen v. Wilson, 28 Fed. 677, 680; Poole v. West Point Butter & Cheese Ass'n, 30 Fed. 513, 520; Johnson v. Insurance Co., 46 Neb. 480, 490, 64 N. W. 1100; Carpey v. Dowdell, 115 Cal. 677, 683, 47 Pac. 695; Union Gold Min. Co. v. Rocky Mountain Nat. Bank, 2 Colo. 248, 257; Illinois Trust & Sav. Bank v. Pacific Ry. Co., 117 Cal. 332, 346, 49 Pac. 197, 202; Fay v. Noble, 12 Cush. 1, 17; Lee v. Mining Co., 56 How. Prac. 373; Calvert v. Stage Co., 25 Or. 412, 36 Pac. 24; Carrigan v. Improvement Co., 6 Wash. 590, 34 Pac. 148; Sparks v. Transfer Co., 104 Mo. 531, 539, 15 S. W. 417.

Moreover, the corporation for several years had the benefit of the money drawn from the bank, and upon divers notes, which were renewed by the notes which the mortgage was given to secure, and cannot, after such length of time, never having made any objection thereto during the transactions, be heard to deny the validity of the same. Union Gold-Mining Co. of Colorado v. Rocky Mountain Nat. Bank, 96 U. S. 640; Pittsburg, C. & St. L. Ry. Co. v. Keokuk & H. B. Co., 131 U. S. 371, 381, 9 Sup. Ct. 770; Construction Co. v. Fitzgerald, 137 U. S. 98, 109, 11 Sup. Ct. 36; Wood v. Waterworks Co., 44 Fed. 147, 150; Railroad Co. v. Kittel, 2 C. C. A. 615, 52 Fed. 63, 73; Railway Co. v. Sidell, 14 C. C. A. 477, 67 Fed. 464, 469; Hardware Co. v. Phalen, 128 Pa. St. 110, 118, 18 Atl. 428; Allen v. Power Co., 13 Wash. 307, 309, 43 Pac. 55; Gribble v. Brewing Co., 100 Cal. 67, 71, 34 Pac. 527; Bradley v. Ballard, 55 Ill. 413, 419.

In Crowley v. Mining Co., 55 Cal. 273, 275, the court said:

"The common-law rule, that a corporation has no capacity to act or to make a contract, except under its common seal, has been long since exploded in this country. Even in England, it has been found to be impracticable, so that the classes of cases which constitute exceptions to the rule have become so numerous that the exceptions have almost abrogated the rule. In the United States, nothing more is requisite than to show the authority of the agent to contract. That authority may be conferred by the corporation at a regular meeting of the directors, or by their separate assent, or by any other mode of their doing such acts."

If this were not so, "it would," as said by Redfield, C. J., in Bank of Middlebury v. Rutland & W. R. Co., 30 Vt. 159, 170, "become impossible to dispose of such contracts with any hope of reaching the truth and justice of the rights and duties of the several parties involved, and this is certainly nothing of which the corporation can complain. It is merely holding them to such rules of action as they see fit to adopt for their own guidance and the transaction of their business."

In Sherman v. Fitch, 98 Mass. 59, 64, the court, speaking of the authority of the president to execute a mortgage in behalf of the corporation, said:

"It is not necessary that the authority should be given by a formal vote. Such an act by the president and general manager of the business of the cor-

Digitized by Google

poration, with the knowledge and concurrence of the directors, or with their subsequent and long-continued acquiescence, may properly be regarded as the act of the corporation. Authority in the agent of a corporation may be inferred from the conduct of its officers, or from their knowledge and neglect to make objection, as well as in the case of individuals."

The principal contention of appellant is that, whatever the rule may be as to the indebtedness incurred by Bryan and Venable, while they controlled and managed the property of the corporation, or as to the validity of the notes executed by them as the notes of the corporation, the mortgage is absolutely void, because it was not executed in the manner provided for by the statute of New York, which required, as a condition precedent to the execution of the mortgage, the written assent of two-thirds of the stockholders, in the manner therein provided. Act to Amend Stock Corporation Law, approved May 18, 1892 (Laws N. Y. 1892, vol. 2, c. 688). In support of his contention appellant's counsel cites Vail v. Hamilton, 85 N. Y. 453; Bank v. Averell, 96 N. Y. 467; In re Wendler Mach. Co., 2 App. Div. N. Y. 16, 20, 37 N. Y. Supp. 444; Sugar Co. v. Whitin, 69 N. Y. 328, 333; and Pauling v. Steel Co., 94 N. Y. 334.

In the Vail Case there was no assent given as required by the statute, or in any other manner, and the court held the mortgage to be invalid.

In the Rochester Savings Bank Case, it was held, as in all the cases, that such an assent is an indispensable condition of the creation of a valid mortgage; but, where such assent was not given at the time the mortgage was executed, it would be validated, in the absence of any intervening rights, by a subsequent assent, which would operate as of the time of the execution of the mortgage and make it valid. The court, among other things, said:

"The object of the legislature, in requiring such assent, was the protection of stockholders against improvident, collusive, or unwise acts of the trustees, the governing body of the corporation, in incumbering the corporate property. Sugar Co. v. Whitin, 69 N. Y. 333. That the enactment was in the interest of stockholders is indicated by their designation as the assenting body. * * * The stockholders of a corporation are the equitable owners of the corporate property. The trustees are the managers. * * * The act of 1864 put it in the power of the stockholders to prevent any incumbrance of the corporate property by the act of the trustees alone."

In Sugar Co. v. Whitin the court held that the statute under consideration was intended simply to protect the stockholders from improvident or corrupt acts of the officers of the corporation, and was not enacted because the mortgaging of corporate property was regarded as improper per se. In the course of the opinion, Church, C. J., said:

"Without considering the question whether any but stockholders may interpose the objection to the authority exercised in this case, the inference that the general purpose and design of the act was in the interest of stockholders only, has some bearing upon the question presented as to the proper rule of construction to be adopted of the paper produced as an assent of the stockholders. The officers of a corporation are the agents of the stockholders, who occupy, in some respects, the character and position of principals, and this relation is recognized in the act in question, permitting the mortgaging of corporate property. The officers were prohibited from mortgaging, but may do it with the consent of the stockholders. The act of mortgaging is not deemed illegal;

Digitized by Google

but the principal must assent in writing, and, to make the provision of practical value, the difficulty of procuring the assent of every stockholder was avoided by permitting the owner of two-thirds to assent. It is important to observe that the statute does not prescribe any particular form of assent, nor what it shall specify or contain. It only requires an assent in writing to secure a debt by mortgage. The statute should receive a practical, and not a technical, construction, and especially in the absence of fraud, and in the absence of any objection on the part of those for whose benefit the proviso was inserted, we are not called upon to exercise great astuteness in discovering defects which are not of such a substantial and radical character as to render the assent ineffective for the purpose designed. * * * He [appellant] seeks to gain a preference, not by objecting either that the amount of the debt or its nature was not correct and legitimate, nor claiming that he was in manner deceived or misled, but by criticising the form in which those interested saw fit to express their assent. Assuming his right to object, we think the defects must be so radical that an intention to consent cannot be inferred."

In Pauling v. Steel Co., the court, referring to Sugar Co. v. Whitin, said:

"It is, at least, doubtful whether anybody but stockholders can complain that the condition was not complied with."

The mortgage in the present case was executed by the "G. V. B. Mining Co. [L. S.], by G. V. Bryan, President," and indorsed thereon is the following: "I hereby assent to the making of the mortgage. G. W. Venable." Bryan and Venable, be it remembered, at that time owned more than two-thirds of the stock of the corporation. In fact, they owned all the stock except 352 shares, as shown by the preponderance of the evidence given at the trial. Following the reason and spirit of the decisions in the state of New York, we think the acts of Bryan and Venable, in the absence of any allegation or proof of fraud upon their part, constituted a substantial compliance with the statute, and that the corporation is not in a position to make any objection thereto upon this ground.

It is next claimed that the mortgage is not the deed of the corporation, because the seal thereto affixed by Bryan is not its corporate seal. The by-laws of the corporation provide that "the trustees shall provide a seal, with a suitable device, and containing thereon the corporate name of the company, which shall be in charge of the secretary or treasurer, and said seal shall be affixed to all certificates of stock, and to such contracts and agreements as is required by law." The mortgage in the present case closes with the words: "In testimony whereof, the said party of the first part, by G. V. Bryan, its president, has hereunto subscribed its name, and affixed its corporate seal, the day and year first above written." There are several authorities which hold that, in the execution of important contracts, deeds, and mortgages by a corporation, it is essential that the corporate seal should be attached. Many of these cases are based upon the doctrine which prevailed in former times, when the use of seals containing devices symbolical of the individual or corporation to which they belonged was quite common. These cases are akin to others which, for many years, declared that a seal must be impressed on wax, wafer, or some other adhesive or tenacious substance, instead of being impressed on paper; in regard to which Mr. Justice Grier, in Pillow v. Roberts, 13 How. 472, 474, said: "It is time that such objections to the validity of seals should cease." But this admonition not having

Digitized by Google

produced the effect suggested, the legislature of several of the states have enacted statutes providing just what kind of seals shall be used and how they shall be affixed. In others the use of the seal has been dispensed with. Of course, in such states, the statute governs. While it is always safer for a corporation to use its corporate seal, if one has been adopted, in order to avoid objections, yet its use is not absolutely necessary to the validity of the instrument. As was said by the court in Ford v. Hill (Wis.) 66 N. W. 115, 118:

"The old doctrine that corporations can act only by deed or instrument under seal has been very much modified. It has given way to the pressure put upon it by the great growth of corporate transactions, and the necessity for greater freedom in their operations for the convenience of business."

Where an instrument, which requires a seal, is in all other respects properly signed and executed, it should not be declared invalid because the corporate seal was not attached, where, as here, it affirmatively appears that the "[L. S.]" was adopted and used for the occasion as the seal of the corporation. Bank of Middlebury v. Rutland & W. R. Co., 30 Vt. 159, 171; Thayer v. Mill Co., 31 Or. 437, 444, 51 Pac. 202; 1 Mor. Priv. Corp. (2d Ed.) § 339; 2 Cook, Stock, Stockh. & Corp. Law (3d Ed.) § 722; B. S. Green Co. v. Blodgett, 159 Ill. 169, 174, 42 N. E. 176; Proprietors, etc., v. Hovey, 21 Pick. 417, 428; Porter v. Railroad Co., 37 Me. 349; Eureka Co. v. Bailey Co., 11 Wall. 488, 491; Navigation Co. v. Hooper, 160 U. S. 514, 518, 16 Sup. Ct. 379; Tenney v. Lumber Co., 43 N. H. 343, 350; Johnston v. Crawley, 25 Ga. 316, 326; 1 Devl. Deeds, § 337.

A contract of a corporation which is ultra vires is something outside the object of its creation, as defined in the law of its organization, and therefore beyond the powers conferred upon it by the legislature. Such a contract is not voidable only, but wholly void, and of no legal effect. The objection to the contract is, not merely that the corporation ought not to have made it, but that it could not make it. The contract cannot be ratified by either party, because it could not have been authorized by either. No performance on either side could give the unlawful contract any validity, or be the foundation of any right of action upon it. But, when a corporation is acting within the general scope of the powers conferred upon it by the legislature, the corporation, as well as persons contracting with it, may be estopped to deny that it has complied with the legal formalities which are prerequisites to its existence, or to its action, because such requisites might in fact have been complied with. The doctrine of ultra vires has been often said to rest upon three distinct grounds: (1) The obligation of persons dealing with a corporation to take notice of the legal limits of its powers; (2) the interests of the stockholders not to be subjected to risks which they have never undertaken; and (3) the interest of the public that the corporation shall not transcend the powers conferred upon it by law. The authorities bearing upon these general principles are well settled, and are clearly stated in Central Transp. Co. v. Pullman's Palace-Car Co., 139 U. S. 24, 59, 11 Sup. Ct. 478, and Bank v. Kennedy, 167 U. S. 362, 368, 17 Sup. Ct. 831, and in the numerous authorities there cited. It is manifest therefrom, as well as from the principles hereinbefore announced

Digitized by Google

and hereinafter stated, that the doctrine of ultra vires has no application to this case. The corporation, as we have already shown, had the unquestioned authority and power, under the law, to execute the notes and mortgage in question, and it cannot, therefore, be claimed that their execution by the president was ultra vires. The stockholders are bound by their consent, as well as by their failure to make objections, to the manner in which the business was transacted, and the parties with whom the corporation transacted its business had the right to believe that it was not exceeding its powers. The general public are not interested in this suit.

In McCracken v. Robison, 6 C. C. A. 400, 57 Fed. 375, 377, the court held that directors who own all the stock of a corporation are not within the rule prohibiting persons in a fiduciary relation from contracting for their own advantage in the name of the beneficiary, and such a contract, made in the name of the corporation by the unanimous consent of the directors, is not invalid, as against public policy. Among other things, the court said:

"The defendants, by confounding names with things and form with substance, have built up a theory to shelter themselves from performing their own part of the contract, which is as unsound as their own conduct is dishonest."

In Barr v. Railroad Co., 125 N. Y. 263, 273, 26 N. E. 145, the court, among many other things applicable to this case, said:

"If the company's directors were interested in the work and profits of construction, and evaded a direct contract through the form or device of an intermediary contractor, that was a matter for the company or for its stockholders to take hold of; but the stockholders and the members of the syndicate were the same persons, and, however wrong the transaction might be if other persons were concerned, here no injury was effected to any one interested in the corporation, and, however illegal the transaction, there was no person apparently to complain of it."

See, also, Wood v. Waterworks Co., 44 Fed. 146, 151, and authorities there cited.

It is evident that neither Bryan nor Venable, if they had continued in charge of the corporation, could be heard to say that their acts were illegal, without authority of law, and wholly void. It cannot consistently be said that the acts of the Thurber faction stand in any better light. When they took charge of the mines on July 11, 1895, which was within a month after the execution of the mortgage in question, they apparently endeavored to be honest and just to all parties concerned. They continued working under the lease and agreements referred to in the foregoing statement up to October 6, 1897, with full knowledge of all the facts, without interposing any objection to the manner in which the indebtedness was incurred and mortgage executed. Then, when they found they would not be able to pay the debts of the corporation, as they had agreed to do and partially did, they determined to take advantage, if they could, of all the acts of Bryan, and, with Venable's willing assistance, save something for themselves from the general wreck, and to this end they procured their directors to pass a resolution "condemning as unauthorized the notes and mortgage in this suit, and empowering the president [Thurber] to resist this action," and by this means they have endeavored to shield themselves from all wrong under

Digitized by Google

the guise of the innocent name of the corporation. As against the appellee herein, they have no superior equity, and the corporate name ought not to be used, and cannot be used, for the purpose of avoiding the payment of the debts of the corporation incurred under conditions which made the corporation liable. To so hold would lead to frauds innumerable. However improper, illegal, or unwarranted Bryan's conduct may have been, it is transparent that he has been distanced in the race by his competitor Thurber, and that the corporation will have to bear the sins of both.

There is but one other point to notice. No testimony seems to have been offered upon the allegation in the complaint concerning the alleged mistake in the description of the property mortgaged, and the decree declares that this alleged error is "corrected to conform to the intent of the parties to said mortgage as to the premises and property which should be mortgaged thereby." It is claimed that the mortgage expressly covered the group by name, and that, under the allegations, must have covered the Sumol claim in question; that the answer simply denies that any mistake was made, and did not deny that the Sumol was a part of the group; and that it was therefore unnecessary to prove the facts alleged in the complaint. The objection to this part of the decree was raised for the first time on appeal, and the court might for this reason be justified in not considering it; but inasmuch as the appellee "offered to release it from the effect of the decree," and as it is stated in the brief that it "was written into the decree through inadvertence," we are of opinion that the decree should be modified by striking out the order and description herein referred to, but that this correction should not affect the right of appellee to recover its costs. The decree, as modified, is affirmed, with costs.

(95 Fed. 41.)

HOOK v. MERCANTILE TRUST CO. OF NEW YORK et al.

(Circuit Court of Appeals, Seventh Circuit. June 6, 1899.)

No. 495.

1. CONCLUSIVENESS OF DECREE—ADMITTING NEW PARTIES—EFFECT ON RIGHTS OF PURCHASER PENDENTE LITE.

   Where one not originally a party is permitted to file a petition in a suit in equity, and to set up new and different rights from any involved in the original bill, such petition (at least, as against a stranger to the suit, who during its pendency, and before the filing of the petition, has acquired possession of the property in litigation) must be treated as the commencement of a new suit; and such person must be brought in by process in accordance with the established practice, or he will not be concluded by a decree in favor of the petitioner.

2. APPEAL—DEFENDANTS JOINTLY AFFECTED BY DECREE—JOINDER OF CO-DEFENDANT.

   Where a decree provided in general terms for a conveyance and release by two defendants, who were husband and wife, of all their rights, titles, and interests in certain real estate, the title to a part of which was in the husband and a part in the wife, but under the statutes of the state each had a dower interest in the realty owned by the other, such decree, as

Digitized by Google

to all of the property involved, affects rights of both defendants; and neither can maintain an appeal without joining the other, or obtaining an order of severance.

3. SAME—EFFECT OF GRANTING REHEARING.
It is the intention of the court that the granting of a rehearing without restriction shall operate to vacate its judgment, so that thereafter the cause shall stand as if no judgment had been entered.

4. SAME—MOTION TO DISMISS—WANT OF NECESSARY PARTIES.
A failure to join necessary parties on an appeal is jurisdictional, and a motion to dismiss on that ground may be entertained at any time before final disposition of the appeal.

Appeal from the Circuit Court of the United States for the Southern District of Illinois.

This case was first argued at the May session, 1898, and at the commencement of the present term of the court, on October 8, 1898, an opinion was handed down, reversing the decree in favor of the appellees upon their bills for foreclosure, but denying the appellant the relief sought upon her cross bill. 60 U. S. App. 647, 32 C. C. A. 238, 89 Fed. 410. Each of the parties asked a rehearing, and on February 7, 1899, at the adjourned January session of the court, both petitions were granted. Thereupon the appellees interposed a motion to dismiss the appeal on the ground that the decree appealed from is a joint one against the appellant, Mary B. Hook, and other defendants, especially William S. Hook, who did not join in, and were not served with notice of, the appeal, and from whom no order of severance was entered allowing the appellant a separate appeal. This motion requires that the statement of the case be made fuller, and in some particulars more specific, than before.

The Chicago, Peoria & St. Louis Railway Company, which, for brevity, will be here called the "Peoria Company," was organized on February 7, 1887, and became the owner, by consolidation, of the lines of railroad theretofore known as the Peoria, Pekin & Jacksonville, extending from Jacksonville, through Havana, to Pekin, and the Springfield & Northwestern, extending from Havana to Springfield. This road, the Litchfield, Carrollton & Western, the Louisville & St. Louis, and the Jacksonville Southeastern were operated under the control of William S. Hook, as president or general manager, as one system, known as the Jacksonville Southeastern Line, and books were kept in that name of the accounts of the various corporations concerned. On March 1, 1888, the Peoria Company executed a mortgage in the form of a trust deed to the Mercantile Trust Company to secure bonds to the amount of $1,500,000; on July 15, 1889, it executed a mortgage to the Central Trust Company, as trustee, to secure first consolidated mortgage bonds, so called, to the amount of $1,041,000, to enable it to redeem prior bonds, and to discharge obligations incurred in the acquisition and construction of its lines, one of which was described as terminating at Jacksonville, and one as a line to be constructed from Litchfield to East St. Louis; and on June 1, 1891, it executed to the Metropolitan Trust Company, as trustee, a third mortgage, covering all its lines, one of which was described as "terminating in the city of East St. Louis," to secure bonds to the amount of $2,500,000. There having been default in the payment of interest coupons of each series of bonds, suits for foreclosure were brought by the respective trustees,—by the Mercantile Trust Company on September 21, 1893, by the other companies on later dates; and on October 26, 1893, the three suits were consolidated under the title of the first. By subsequent amendments and supplemental bills, William S. Hook, Mary B. Hook, and Marcus Hook were made defendants; and it was alleged, as ground for relief against them, that certain rolling stock, rights of way, and depot grounds, including the terminals at East St. Louis and Jacksonville, which are the subjects of controversy on this appeal, were acquired for, and belonged to, the defendant railway company, and were subject to the several mortgages sued on, though the title thereto appeared to be in William S. Hook, Mary B. Hook, and Marcus Hook,—the terms of the averment concerning the lands being, "The title to which said lands or rights of way now stand of record in the respective names of said William S. Hook and the said Mary B. Hook, as here-

Digitized by Google

inafter stated." There follow descriptions showing the East St. Louis property "standing in the name of said Mary B. Hook," and all the lands described in the decree, except those at East St. Louis and Jacksonville, and certain lots described in amendments to the bills for foreclosure, "standing in the name of said William S. Hook." No joint ownership was alleged. These defendants answered separately to the effect that the terminal property at East St. Louis was conveyed by the Wiggins Ferry Company to William S. Hook in the year 1882, before the Peoria Company was organized or thought of; that, at the time of the purchase, Marshall P. Ayers and Augustus E. Ayers were connected in railroad enterprises with William S. Hook, and had purchased the terminal properties, together with other pieces, partly in the name of William S. Hook and partly in the name of Marshall P. Ayers; that on December 29, 1886, an account was taken, and it was found that the sum of $30,871.56 was owing and due to M. P. Ayers & Co., bankers at Jacksonville, Ill., for moneys advanced by Augustus E. and Marshall P. Ayers upon the purchases made, including the property at East St. Louis; that on that date William S. Hook, Marshall P. Ayers, and Augustus E. Ayers executed to M. P. Ayers & Co. a promissory note for the amount stated, and at the same time, or soon thereafter, executed a declaration of trust, which included the premises in question, to secure the payment of the debt evidenced by the note; that pending a suit in the circuit court of Morgan county, Ill., to subject the premises to sale, as the property of the Jacksonville Southeastern Railway Company, upon an execution against that company, M. P. Ayers & Co. transferred the note and security therefor to William S. Hook, in consideration of the payment by him of the amount of the debt, and William S. Hook in turn transferred the same to Mary B. Hook, in consideration of the advancement by her to him of the sums so paid, and that in that suit the declaration of trust was adjudged to be valid, and to constitute a lien prior to the lien of the execution of the complainants in the suit, and it was ordered that the premises be sold, and the proceeds of the sale applied first to the discharge of that lien. Besides pleading the facts stated, and claiming that the decree so rendered was an estoppel against the Peoria Company and against all claiming under that company, which, it was alleged, acquired possession pending the suit, the appellant, Mary B. Hook, set up the same facts in a cross bill, and by a supplemental bill showed that by virtue of the decree a sale had been made to her, and that on the expiration of the time allowed for redemption she had received a deed of conveyance. It was alleged in the answer of each of the defendants, and in the cross bill of the appellant, that the properties in dispute were not purchased for, nor an agreement ever made for the sale thereof to, the Peoria Company, and that the possession of that company had begun and been maintained under contract of lease at an annual rental of $2,000, which, however, since 1893, had not been paid. She prayed an adjudication of her title and a decree for unpaid rent. Issues having been joined by replications in the usual form, the court on July 10, 1895, entered a decree of foreclosure and sale, reserving "the remaining undisposed-of claims, issues, and equities raised by the answer of the defendants William S. Hook, Mary B. Hook, and Marcus Hook," and of other parties mentioned, for further consideration and adjudication, unaffected by the sale, which, however, by the terms of the decree, was to "include all and singular the right, title, and interest of the defendant railway company, and of the respective complainants, as mortgagees, in and to the property claimed by any of the defendants," or, as expressed in the twenty-eighth clause of the decree, "the property pertaining thereto, including such portion [as is] claimed by the individual defendants, or any of them." Sale was made, reported, and confirmed, and deed ordered, executed, reported, and approved. Upon the reserved issues, the master, to whom the reference was made, reported the evidence and his conclusions. In respect to the East St. Louis property he found the facts to be substantially as stated in the answer and cross complaint of the appellant, and reported his conclusion that the title was hers, and had never belonged to the Peoria Company. The Jacksonville property, he reported, had been purchased by Hook and Ayers in 1882, 1883, and 1884, had been included in the declaration of trust, and had taken the same course as the property in East St. Louis, being now in the name of Mary B. Hook. The exceptions of the complainants to these parts of the report the court sustained. and declared a finding of its own,—"that subsequent to the 1st day of March, 1888,

Digitized by Google

and prior to the 21st day of September, 1893, the defendant William S. Hook, for and in behalf of the defendant the Chicago, Peoria & St. Louis Railway Company, acquired for use, in connection with the said line of railway and the business thereof, certain parcels of land and rights of way over the same: that the parcels of land and rights of way thus acquired were purchased with funds belonging to said defendant railway company, and the title thereto taken in the name of said William S. Hook; that the parcels of land and rights of way thus acquired are more particularly described as follows." In the description which followed were included the terminals at East St. Louis and Jacksonville, and a decree was accordingly entered that those properties belonged to, and should be conveyed by the appellant, or in default thereof by the master, to, the Chicago, Peoria & St. Louis Railroad Company, which, by the foreclosure sale and the conveyance thereunder made, had succeeded to the rights of the Peoria Company. It is stated in the finding that the legal title to all the premises described and found to have been acquired for the Peoria Company "is in the defendant William S. Hook, with the exception of the following, which is in the name of Mary B. Hook, to wit," those at Jacksonville and East St. Louis, the title to which, it is found, was placed in her name after the commencement of the several foreclosure suits. It is also found that the allegations of the cross bill and of the amended and supplemental cross bill of Mary B. Hook are untrue. The decree is that the cross bills be dismissed; that the master commissioner execute to the purchaser at the sale a deed conveying the properties described, with all the right and equities of the defendants; that the defendants the Peoria Company, William S. Hook, Mary B. Hook, and Marcus Hook, and others named, "severally execute their deed or deeds, or join with the master commissioner in the execution of the deed or deeds to be made by him * * * of the respective properties described in paragraph 1 of this decree, or the portion thereof covered by the respective mortgages to said trust companies, and shall convey and release to the said Chicago, Peoria & St. Louis Railroad Company of Illinois their rights, titles, and interests in the property described." This decree was entered on December 31, 1897.

The suit in the circuit court of Morgan county was brought on November 8, 1890, by Kennedy, Tower, and Catherwood, trustees in a mortgage executed by the Jacksonville Southeastern Railway Company, on the theory that the properties sought to be reached were bought for and with the money of that company, and therefore belonged to it. Besides the railway company, William S. Hook, Marshall P. Ayers, and Augustus E. Ayers were made defendants; it being averred in the bill, on information, that they claimed to have advanced individual moneys to the amount of $30,000 upon the purchase price of the properties described, and were holding the titles thereto to secure the repayment to them of that sum. Process was served on all of the defendants, and the defendants Ayers answered, setting up the declaration of trust as a prior lien upon the properties for the amount of the debt evidenced by the note to M. P. Ayers & Co., but not disputing that, subject to that lien, they belonged in equity to the Jacksonville Southeastern Railway Company, and were liable to sale under the execution which the complainants had caused to be levied thereon. A cross bill was also filed by the defendants Marshall P. Ayers and Augustus E. Ayers, jointly with John A. Ayers, who with them composed then the firm of M. P. Ayers & Co., setting forth the same facts and implying the same theory. The railway company and William S. Hook did not answer or appear to the bill, and were not defaulted, but they joined in a demurrer (never ruled upon) to the cross bill of the Ayerses. The cause was continued from term to term until the May term, 1893, at which the court entered a decree, the substance of which is a finding and adjudication, according to an agreement filed, of the relative rights of Hook and of M. P. and Augustus E. Ayers in the note secured by the deed of trust, it being adjudged that Hook, on payment of the sum of $12,813.43, with interest, in addition to other sums already paid, should be subrogated to the right, title, and interest of Marshall P. Ayers and Augustus E. Ayers in and to the premises described in the declaration of trust, and that upon payment to them of that sum, with interest, the Ayerses should execute to Hook a deed of quitclaim for the premises; and upon a further finding that judgment had been recovered by the complainants, and execution issued and levied as alleged in the bill, it was decreed that the

Digitized by Google

master in chancery of the court "proceed to sell all and singular the right, title, and interest of the Jacksonville Southeastern Railway Company in and to the real estate hereinafter described,—subject, however, to the debt of the said William S. Hook, as subrogated in this decree, and of [to] the debt provided for, yet unpaid, to the said M. P. Ayers & Co., as found in said stipulation," etc. The decree contains no reservation or provision for further proceedings, except "that the master report his proceedings under this decree to this court." After the entry of this decree no further step was taken until the next November term of court, at which, on December 26, 1893, Mary B. Hook presented a petition, entitled in the cause, in which she set out at length the previous pleadings, proceedings, and the agreement on which the finding and decree were based, and alleged full payment by William S. Hook to the Ayerses of the remaining sum due them, and that William S. Hook, having so acquired the entire interest, had assigned the debt and the declaration of trust to her in consideration of moneys to the full amount of the debt advanced by her to enable him to make the purchase of the Ayerses. Without notice to any of the parties to the original suit, and without recital of appearance by any of them, the court permitted this petition to be filed, and thereupon, on the same day, entered a decree whereby, after reciting the previous proceedings at length, and finding, among other things, "that the said Mary B. Hook has acquired all of the right, title, and interest, both in law and in equity, of the respondent William S. Hook in and to all the real estate described in said deed" (of trust), it was ordered "that the decree entered herein at the May term, A. D. 1893, of this court by consent be set aside; that this cause stand upon the docket in the name of the original complainants, and against the respondent Mary B. Hook"; and then, after a finding "that the complainants have a right to proceed with the sale of said property to satisfy said executions, but subject to all the rights vested in the said Mary B. Hook as hereinbefore found," it was adjudged and decreed that the Jacksonville Southeastern Railway Company pay to the master, for the use of Mary B. Hook, the sum of $43,939.40, with interest, and $61,475, with interest, for the use of the complainants, and that in default of such payments within 10 days the master should proceed "to sell all and singular the real estate described in the bill in this cause," and out of the proceeds pay, in their order, the costs, the sum due to Mary B. Hook, and that due to the complainants, and the remainder, if any, turn over to the Jacksonville Southeastern Railway Company.

This appeal, taken on February 25, was perfected by filing the transcript with the clerk of this court on April 2, 1898. On June 27, 1898, William S. Hook, without notice to the appellant or other co-defendants, filed an assignment of errors, and was granted a separate appeal, and having obtained of this court an order allowing the use of the printed transcript in this case, supplemented with a certified copy of the order allowing his appeal and entries connected therewith, on December 2, 1898, within the time allowed by enlarging orders, filed the transcript with the clerk of this court. The briefs in his behalf conclude with the assertion that the decree is erroneous for four reasons, stated as follows: "First. Because it found the East St. Louis & Jacksonville terminal property has been acquired with the funds of the Peoria Company, and was incumbered by the trust deeds mentioned, and that said liens were prior to any right of appellant in said property. Second. Because the court held by said decree that the Peoria Company, and through it the appellees, were entitled to have the title to said premises conveyed to the Peoria Railroad Company of Illinois, thereby devesting the appellant of his superior title to the same. Third. Because by the decree it was held that the real estate situated in Jacksonville, Illinois, and described on page 778 of the transcript, and which was purchased some fifteen years before there was a Peoria Company, was subject to the trust deeds, and must be conveyed by the master and by the appellant to the Peoria Railroad Company, when there is not a pretense of any evidence showing any lien, or contract for a lien, upon said real estate named, by or through which the Peoria Company ever acquired any interest in or right to any part of said real estate. Fourth. Because the decree requires the master to convey, and requires appellant to join in said conveyance conveying, all of the real estate described, the title to which appears to be in appellant, when it appears the Peoria Company had no power to receive or take the title to the same, and could not, therefore, convey any equity to the

Digitized by Google

appellees." The first three of these propositions, it will be observed, have reference to the terminal properties claimed by Mrs. Hook, and involve a repetition of the questions presented by her appeal.

Thomas Worthington, for appellant.
Bluford Wilson and P. B. Warren, for appellee.

Before WOODS, JENKINS, and GROSSCUP, Circuit Judges.

WOODS, Circuit Judge, after making the foregoing statement, delivered the opinion of the court.

The motion to dismiss and the merits were argued at the same time. The opinion of the court is that the motion must be sustained, and for that reason it is not necessary to decide again the merits of the case; but it is proper to say that the rehearing was ordered mainly because the judges who composed the court when the case was first heard, except Judge Showalter, who died before the petitions for rehearing were considered, were convinced that the equitable title to the property in suit had been acquired by the Peoria Company, substantially as stated in the finding below; and, that being now the opinion of the court, the reasons therefor will be stated briefly:

The finding that the properties were acquired for the Peoria Company between March 1, 1888, and September 21, 1893, it is clear, does not refer to acts of original acquisition in the years 1882, 1883, and 1884, but must be accepted as meaning that by later transactions, culminating between the dates named in the finding, the properties were acquired and paid for as stated. So construed, the finding rests upon sufficient proof. The contrary conclusion, declared in our first opinion, was due in part to a too technical view of the evidence, considered piecemeal rather than as a whole, but more especially to a failure to consider the fact (not mentioned in the briefs then before the court) that the terminals in question (certainly those at East St. Louis) were designated as the property of the Peoria Company upon a map made at the time of, or soon after, the construction of the road into East St. Louis. Besides that property, it appears that the right of way from Litchfield to East St. Louis, and every piece of land of the Peoria Company, about the title to which, whether taken in one name or another, there was no dispute, were designated on that map by red boundary lines, and by the initial letters of the name of the company. The map having been made by the engineering department of the Jacksonville Southeastern Line, working under the authority of William S. Hook, counsel for appellees contend that it amounted to a dedication by Hook and the Jacksonville Southeastern Line of the properties designated to the Peoria Company, "as good between the parties as a warranty deed." Whether the platting constituted an irrevocable dedication or not, the fact is of great significance, in that it gives coherence and a new direction to the other proofs, which, without that fact, we deemed insufficient to establish title in the Peoria Company. The map, in connection with the other evidence, we are convinced, warrants the inference that, when that company was put in possession of the properties designated, it was as owner in its own right, and was so intended by all

Digitized by Google

concerned. Everything done before and afterwards points that way. The original purchase, it is true, was made with money of the Jacksonville Southeastern Railway Company,—the entire price, and not the larger part thereof, merely, as stated in our first opinion, being paid out of the funds of that company; but the amount was afterwards carried to the "clearance books" of the Jacksonville Southeastern Line, and probably should be deemed to have passed to the credit of the Peoria Company. That fact, however, is denied, and need not be determined. The Peoria Company, besides owning a large share of the stock of the Jacksonville Southeastern Company, it is clear, was the chief, if not the sole, contributor to the earnings over expenses of the Jacksonville Southeastern Line. Besides, if the original trust or equitable lien in favor of the Jacksonville Southeastern Railway Company was not extinguished by a repayment of the purchase money, that company never asserted title or interest, and Hook, holding the legal title, proceeded to deal with the property as if under no obligation to that company. It appears probable, on the evidence, that he came under an equal or greater obligation to the Peoria Company; but on that point, too, there is dispute, and we make no attempt to clarify accounts which the witnesses found and left in confusion. The burden of proof in that respect was on Hook, who was in fiduciary relations to all the companies concerned; and, if inferences against him were necessary, it would not be unreasonable to draw them. While there is no direct evidence of the making of a contract for a transfer of title or an indefeasible interest in the disputed properties to the Peoria Company, there is, in the maps and other evidence adduced, the items of which are referred to in our first opinion and need not be stated again, ample ground for the inference that Hook, holding the title, and representing practically all interests concerned, determined or agreed for all that that company should take possession, improve, and own the property. Terminal facilities at East St. Louis for that company, and for that alone of all the companies which he represented, were indispensable, then and for the indefinite future; and the same foresight which led him to obtain title to the property in 1882 dictated that he then acquire it for or appropriate it to the immediate and permanent use of that company. To do so was only to execute his original design. To have done less would hardly have been an adequate discharge of his duty to that company, and that he did his duty in that respect the evidence, though inferential, is nevertheless convincing. Under the circumstances, a lease on any conceivable terms could hardly have been reasonable,—certainly not an indefinite lease, terminable at will, or a mere license. No witness testified, and there is no evidence to justify an inference, that a lease was made. William S. Hook, though a witness in the case, was silent on that subject; and Marcus Hook, testifying about conversations with William S. concerning rental values, but not saying that a lease was made, compels the inference that he had no knowledge of the making of one, and perhaps knew that none had been agreed upon.

The finding of the master that the two terminal properties belonged to Mary B. Hook, and not to the Peoria Company, as he found in re-

Digitized by Google

spect to other properties held in the name of William S. Hook or of some of his associates, seems to rest solely upon the proceedings in the circuit court of Morgan county; but by no possible construction can those proceedings affect the Peoria Company. While it still seems to us the better opinion that the decree of May 26, 1893, in that case. was final, and merged the agreement on which it was based, and that consequently the proceedings of the next term, in December, were had without jurisdiction of the parties,—the words "by consent," even if treated as referring to the words "set aside," not being sufficient to show an appearance by any particular party,—yet, even if the decree then rendered in favor of Mrs. Hook be regarded as conclusive of the rights of all parties upon whom process had been served, it does not bind the Peoria Company, notwithstanding it had obtained possession pending the original suit. It had been in possession more than two years when Mrs. Hook intervened. The petition which she was permitted to file asserted a new and different right from any involved in the original bill, and as against the Peoria Company, even if not against the defendants named in the original bill and served with process, was equivalent to the bringing of a new suit, of which notice. unless waived, must have been given according to the established practice. 5 Enc. Pl. & Prac. 658.

We pass to the motion to dismiss: Had Mary B. Hook a right to take and prosecute her appeal without joining William S. Hook, or obtaining an order of severance? The principal question involved in her appeal is of the validity and effect of the decree which she obtained in the Morgan circuit court. That William S. Hook is directly interested in that question is evident. The decree of the state court, if valid, determined, between all the parties, and certainly between the appellant and William S. Hook, that a deed of trust had been executed as alleged, that the deed was valid, that it constituted a lien prior to any and all rights of others, that on the considerations stated he had acquired the lien of M. P. Ayers & Co., and had transferred it, in its entirety, to the appellant; but all these things the decree appealed from either reversed or set at large. In this respect the case is not different from the one recently decided by this court in Elevator Co. v. Nichols, 34 C. C. A. 90, 91 Fed. 832. See, also, Davis v. Trust Co., 152 U. S. 590, 14 Sup. Ct. 693. It is perhaps true, as contended, that in so far as the decree directed the execution of deeds by the appellant and William S. Hook, it is, in a sense, several, meaning that the appellant should convey the terminal properties, the titles to which were found to be in her name, and that William S. Hook should convey the properties described, of which the titles were found to be in his name; but, when it is considered that they are husband and wife, it is hardly to be doubted that the decree was intended, and should be construed, to require that each join in the deed of the other. By an act passed in 1874 a married woman was given power, in Illinois, to sell and convey real property to the same extent and in the same manner that the husband could convey realty belonging to him. But at the same time the husband's estate of curtesy was abolished, and instead thereof it was enacted that "the surviving husband or wife shall be endowed of

Digitized by Google

the third part of lands whereof the deceased husband or wife was seised of an estate of inheritance at any time during the marriage, unless the same shall have been extinguished in legal form," etc., and, further, that "equitable estates shall be subject to such dower." 2 Starr & C. Ann. St. (2d Ed.) p. 1456. It follows that, if the master's report had been confirmed, William S. Hook would have had a right of dower in the properties of which the master reported title in Mrs. Hook. While the title stood, as originally taken, in the name of William S. Hook, Mrs. Hook had an apparent right of dower; or, to say the least, she was in a position to assert such right in any of the properties of which her husband held the title, or in which he owned an equitable and inheritable estate. Whether the right in fact existed, or whether the different properties were held under trusts which excluded claims of dower, were questions involved in the litigation, and were determined by the decree. Whether or not, therefore, a joinder in the execution of deeds was intended, or was necessary in order to cut off dower rights, the decree itself is conclusive against the assertion of such rights by either of these parties, and to that extent is a joint decree against them, or at least is a decree in which each has an interest which would be affected by a reversal or modification in behalf of the other. In conformity with this view is the last clause of the decree, that the defendants "shall convey and release * * * all their rights, titles, and interests in the property described." That requirement is distinctly joint in form. Without impairing its force, it is incapable of severance, and presumably was framed for the purpose of removing all question on the subject by covering all possible interests, whether several or joint. If, upon proper notice, William S. Hook had failed or refused to join in this appeal, he would have been estopped "from bringing another appeal for the same matter," as he has endeavored to do. Hardee v. Wilson, infra.

It is further contended that the judgment of this court rendered upon its first opinion was not vacated by the granting of a rehearing, and that, the judgment so rendered being still in force, the motion to dismiss came too late. The petition of the appellees for a rehearing challenged the opinion of the court in its entire scope, and, as already explained, was granted for reasons equally comprehensive. The intention of this court is that the granting of a rehearing without restriction shall operate to vacate its judgment, so that thereafter the cause shall stand as if no judgment had been entered. The question presented by the motion to dismiss, the supreme court several times has declared, is jurisdictional, and, it follows, may be raised at any time before final disposition of the appeal. See the following cases, and cases cited: Wilson's Heirs v. Insurance Co., 12 Pet. 140; Estis v. Trabue, 128 U. S. 225, 9 Sup. Ct. 58; Mason v. U. S., 136 U. S. 581, 10 Sup. Ct. 1062; Dolan v. Jennings, 139 U. S. 385, 11 Sup. Ct. 584; Hardee v. Wilson, 146 U. S. 179, 13 Sup. Ct. 39. The appeal is therefore dismissed.

Judge GROSSCUP, by reason of sickness, did not share in the final consideration of this case.

Digitized by Google

(95 Fed. 57.)

CITY OF PITTSBURG v. MURPHY et al.

(Circuit Court of Appeals, Third Circuit. June 28, 1899.)

(No. 21, March Term.)

MUNICIPAL CORPORATIONS — ASSESSMENTS FOR IMPROVEMENTS — VALIDITY OF LIEN.

Act Pa. Feb. 24, 1871 (P. L. 126), provides for the making and keeping in the office of the engineer of the city of Pittsburg of books of plans showing the situation and dimensions of property in the city, and also containing the names of the owners, and a record of transfers. It makes it the duty of owners to have their property registered in such books, requires grantees to have their conveyances entered thereon before they shall be eligible to record, and prothonotaries and clerks of courts in which proceedings for partition shall be had to make reports thereof to the engineer showing the divisions and transfers of property therein made, and provides that property shall not be subject to sale for taxes or other municipal claims except in the name of the registered owner. The purpose of the act, as declared by the supreme court of the state, is to facilitate the assessment and collection of taxes and municipal claims on real estate, and to protect the registered owners against the sale of their property for taxes or assessments without notice to them. A conveyance made in 1837 of what was then a rural tract of land, but later became a part of the city, was entered on the books of the engineer. In 1871, after the death of the grantee, the land was partitioned among her heirs, but the proceedings were not reported to the engineer by the clerk as required by law. Subsequently one of the heirs to whom a portion had been allotted subdivided the same, the plan thereof being approved by the engineer, and entered on his books in the name of the heir. *Held* that, as to the lots shown by such subdivision, the heir, and not her ancestor, was the registered owner for the purposes of municipal assessment, and that liens for such assessments filed thereon in her name when she was in fact the owner, and which were otherwise regular, were valid as against a subsequent incumbrancer claiming through her.

Appeal from the Circuit Court of the United States for the Western District of Pennsylvania.

J. C. Gray, for appellant.

J. S. Ferguson, for appellees.

Before ACHESON and DALLAS, Circuit Judges, and KIRKPATRICK, District Judge.

ACHESON, Circuit Judge. Isabel C. Sargent, widow of S. J. Sargent, executed to the Mutual Life Insurance Company of New York a mortgage dated June 2, and recorded June 4, 1894, of certain parcels of land situate in the Nineteenth ward of the city of Pittsburg, described as numbered lots in a plan of lots laid out by said Isabel C. Sargent, and recorded in Allegheny county in Plan Book, vol. 7, p. 153. This mortgage also recited as the source of the mortgagor's title proceedings in partition in the orphans' court of Allegheny county at No. 6, June term, 1871. Judgment having been entered in the court below against the defendant in a scire facias upon the mortgage by virtue of a writ of levari facias thereon, the marshal sold the mortgaged premises, and returned a schedule of distribution of the proceeds of sale. After appropriating a sum sufficient to satisfy the mortgage to the insurance company, the marshal applied the residue of the fund,

Digitized by Google

so far as was necessary, to the discharge of municipal claims of the city of Pittsburg for the grading, paving, and curbing of Beatty street and Supreme alley, the lots so sold abutting thereon. The municipal claims so allowed were as follows: On August 14, 1894, the city of Pittsburg filed at Nos. 3 and 4, November term, 1894, of the court of common pleas No. 3 of Allegheny county, municipal liens for the grading, paving, and curbing of Beatty street, and on March 11, 1896 the city filed at No. 50, March term, 1896, of the same court, a municipal lien for the grading, paving, and curbing of Supreme alley. These liens were filed against the same lots of ground described in and covered by the above-recited mortgage. Mrs. S. Sargent was named as owner at Nos. 3 and 4, November term, 1894, and Mrs. S. J. Sargent was named as owner at No. 50, March term, 1896. Murphy & Hamilton excepted to the marshal's allowance of these municipal liens. The rights of the exceptants arose thus: Mrs. Sargent was married to Edwin Powell in September or October, 1894. Afterwards Edwin Powell, and Isabel C. Powell (formerly Isabel C. Sargent), his wife, executed to Murphy & Hamilton a mortgage dated May 24 and recorded May 25, 1895, embracing, inter alia, the same lots of ground which had been mortgaged to the Mutual Life Insurance Company of New York as above mentioned. The circuit court sustained the exceptions of Murphy & Hamilton to the marshal's return only because the municipal liens were not filed in the name of Isabella M. Negley, a former owner of the land, who was assumed to be the only properly registered owner. In its opinion the court said: "As to this land, therefore, the liens, not being filed in the name of the registered owner as returned, viz. Isabella M. Negley, cannot be sustained."

The evidence shows, and, as we understand the case, it is conceded, that the city of Pittsburg lawfully graded, paved, and curbed Beatty street and Supreme alley, highways upon which the lots of ground sold by the marshal abut; that by statute these lots were subject to assessment and lien for a proportionate part of the cost of the work; that the work was done before Murphy & Hamilton took their mortgage; that the assessments against these lots as made were correct in amounts; and that the liens therefor were filed in the office of the prothonotary of the court of common pleas No. 3 of Allegheny county against the lots within the time required by law. The supposed infirmity in these municipal claims, then, consists in the alleged failure of the city officials (in the single particular above mentioned) to comply with the requirements of the act of assembly of February 24, 1871 (P. L. 126), entitled "An act for the registry of lots in the city of Pittsburgh." This registry act provides for the making and keeping in the office of the city engineer of books of plans of the city showing "the situation and dimensions of each property therein," and who is the owner thereof, with such succession of blank columns as will permit the names of future owners to be entered therein, with the dates of transfers, and with index for recording such names alphabetically. The third section enacts that, to enable the city engineer to keep such book of plans, "it shall be the duty of all parties acquiring real estate by purchase, will, descent, partition or otherwise to make report to him of such conveyance or transfer, with the precise dimen-

Digitized by Google

sions and locality of the premises, and so doing the same shall be received without charge and noted on the deed or title paper by the city engineer or his assistant"; and the recorder of deeds of the county is forbidden to admit to record any deed of conveyance of any lot in the city of Pittsburg which has not been so registered. Section 4 provides that: "It shall be the duty of all owners of houses and lots or tracts of ground to furnish forthwith descriptions of their property to the engineer to aid him in making up his book of plans; and whensoever such description shall have been furnished and the certificate of the engineer or his assistant shall be received, no property so returned shall be subject to sale for taxes or other municipal claims thereafter to accrue as lien of record thereon except in the name of the owner as returned, and after recovery by suit and service of a writ on him, as in case of a summons, scire facias, or other appropriate writ." Section 5 prescribes that "all assessments based upon the area of the lots or tracts of ground within the city limits, shall be made from the descriptions as registered, as far as such descriptions have been entered." Section 7 makes it the duty of the prothonotary and clerks of the several courts of Allegheny county in which proceedings in partition may be had to deliver to the city engineer a description of the property so divided and of the purparts, with the names of the original owners and of those acquiring title. Section 9 provides that the city engineer shall preserve on file arranged alphabetically, and according to date, all reports made to him of descriptions of houses and lands, "and shall give his certificate at the foot of duplicate of the descriptions that report has been made to his office of the description of the designated property or properties."

In the case of Trust Co. v. Fricke, 152 Pa. St. 231, 236, 25 Atl. 530, 531, the supreme court of Pennsylvania, speaking of this act of February 24, 1871 (in connection with a later act not material here), said: "The former is a carefully drawn local or special act, providing for a complete system of registration in the city of Pittsburg alone, designed to facilitate the assessment of real estate, the collection of taxes and municipal claims thereon, etc.; and at the same time to protect registered landowners against the consequences of covert sales for taxes or other municipal claims, blunders of incompetent or negligent officials," etc. Looking at the purposes of this act as thus authoritatively declared, can we affirm that there was any failure of duty on the part of the city officials prejudicial to the municipal claims here in question? Let the facts answer.

By deed of December 15, 1837, James Ross conveyed a tract of land lying outside of the then limits of the city of Pittsburg to Isabella M. Negley, who died seised thereof. This land was the subject of proceedings in partition in the orphans' court of Allegheny county at No. 6, June term, 1871, and was divided among the heirs of said decedent, a purpart being allotted to her daughter, Isabel C. Beatty, in severalty. At the time of this partition the land lay within the enlarged limits of the city of Pittsburg. The clerk of the orphans' court, however, made no return of these proceedings in partition to the city engineer. On May 16, 1874, the deed of December 15, 1837, from James Ross to Isabella M. Negley, was registered in the engi-

Digitized by Google

neer's office. In the year 1882 Isabel C. Beatty married S. J. Sargent. Subsequently S. J. Sargent and Isabel C., his wife, caused the purpart which had been allotted to the latter in the partition proceedings to be subdivided into lots, and laid out on the ground. On September 1, 1885, a plan of these lots was brought to the office of the city engineer for approval and filing in the registry department. Mrs. Sargent herself certainly came to the city engineer's office with the plan, requesting that it be approved by the engineer, and filed in his office. E. M. Bigelow, the city engineer, testifies that the plan was presented by both Mr. and Mrs. Sargent for his official approval, and that both requested that it be filed as their plan. It was approved, the approval being written underneath an indorsement of what the plan was; the whole being as follows: "Plan of property in the 19th ward belonging to S. J. Sargent and wife." "Approved September 1st, 1885. E. M. Bigelow, City Engineer." This plan, thus approved and indorsed, was filed in the city registry office on the same day, and it was entered in the original plan book of the office. Mrs. Sargent made no subsequent report whatever to the city engineer in respect to this property. In making the street improvements and the assessment here involved, the city followed this plan so filed and entered in the official plan book. Mrs. Sargent was the owner of this property when this work was done and the assessments therefor were made. S. J. Sargent, her husband, had previously died. It may be well here to mention one other fact. On September 1, 1885, a duplicate copy of said plan, entitled "Plan of Property in the 19th Ward, City of Pittsburgh, Belonging to S. J. Sargent and Wife," with the approval of E. M. Bigelow, city engineer, entered thereon, and with this indorsement: "I hereby adopt this plan as mine. Isabel C. Sargent,"—was acknowledged by Mrs. Sargent, and by her put on record in the office of the recorder of deeds of Allegheny county in Plan Book, vol. 7, p. 153.

Such being the facts, we are not able to concur in the view that these municipal liens should have been filed in the name of Isabella M. Negley. In our judgment, she was not the last registered owner. Under the circumstances then existing, to have filed these liens in her name would have been misleading and erroneous. Both the letter and the spirit of the act of February 24, 1871, required that the liens be filed in the name of Mrs. Sargent, who was the actual owner of the property, and, we think, the last registered owner. When Mrs. Sargent took her plan of lots to the office of the city engineer, and had it accepted and filed, she complied with the requirements of the registry act, and especially with the provisions of the third and fourth sections. She furnished the city engineer with the essential particulars specified in those sections, namely, "the precise dimensions and locality of the premises," as the basis of future assessments as prescribed by the fifth section. Mrs. Sargent had no deed of conveyance to register. Her title in severalty to this property came to her simply through the partition proceedings in the orphans' court. Presumably, she furnished satisfactory evidence to the city engineer that she had acquired the property by "partition,"—one of the modes of "acquiring real estate" mentioned in section 3. It was for the city engineer to determine whether the proof of ownership she produced was

Digitized by Google

sufficient. In fact, she was the owner. When, therefore, acting on behalf of the city, the city engineer accepted and filed her plan of lots, and entered it in the original plan book of the city, Mrs. Sargent came under the protection of the act of February 24, 1871, as a registered owner of the lots, and thereafter the city was bound so to treat her and the property she had so reported and returned. The fact is, there was no registry in the city engineer's office, other than that made by Mrs. Sargent, by which these municipal assessments could have been made. The deed of James Ross to Isabella M. Negley of December 15, 1837, described a single tract of rural land. It is immaterial that no entry may have been made at the place of the registry of the Ross deed connecting it with Mrs. Sargent's registered plan. The registry under the act of February 24, 1871, is not intended for the guidance of conveyancers or title examiners. As we have seen from the cited decision of the supreme court of Pennsylvania, the registry has two purposes only, namely, to facilitate the assessment of real estate and the collection of municipal claims on the one hand and the protection of registered landowners on the other hand.

These municipal liens were filed under sections 1 and 2 of the act of May 16, 1891 (P. L. 69), which direct that the lien shall name the municipal claimant, "the owner or reputed owner," shall contain a reasonable description of the property, shall state the amount claimed, for what improvement the claim is made, and the time when the assessment was finally confirmed or made. All this was done here. The name "Mrs. S. Sargent" in the two instances, and the name "Mrs. S. J. Sargent" in the other instance, was a sufficient designation of ownership under the circumstances. Such proceedings are in rem, and it has been held that, if a municipal claim designates "the heirs" of a named decedent as owners without naming the heirs themselves, it is a sufficient designation of ownership. Northern Liberties v. Coates' Heirs, 15 Pa. St. 245; Beltzhoover Borough v. Beltzhoover's Heirs, 173 Pa. St. 213, 33 Atl. 1047. We see no reason to doubt that the municipal liens filed here were good as against Mrs. Sargent, and we think that they were equally good as against the appellees who claim under her.

The city of Pittsburg did nothing to mislead Murphy & Hamilton. If the latter had no actual knowledge of these municipal liens, they have only themselves to blame. They took a mortgage on lots in Mrs. Sargent's recorded plan. Even if knowledge were not imputable to them otherwise, their own mortgage, in connection with the recorded plan, apprised them that their mortgagor had been the wife of S. J. Sargent. Now, any proper search in the prothonotary's office of the court of common pleas No. 3 of Allegheny county would have disclosed the two municipal liens which had been filed on August 14, 1894. Then the improvement of Supreme alley was patent, and Murphy & Hamilton were chargeable with knowledge that these lots were assessable for their proportion of the cost of that work, and that it was a statutory lien. Inquiry, which, under the circumstances, was a duty, would have revealed the pendency of the proceeding for the assessment in re grading, paving, and curbing Supreme alley, at No. 548, February term, 1895, of the court of common pleas No. 3 of Alle-

Digitized by Google

gheny county. We are of opinion that nothing has been shown to invalidate or postpone these claims of the city of Pittsburg. The decree of the circuit court is reversed, and the case is remanded to that court, with directions to overrule the exceptions to the marshal's return in respect to the municipal liens filed by the city of Pittsburg for the improvement of Beatty street and Supreme alley, and confirm said return as to them.

(95 Fed. 87.)

NATIONAL BANK OF OSHKOSH v. MUNGER.

(Circuit Court of Appeals, Seventh Circuit. June 6, 1899.)

No. 497.

1. AGENCY—RESPONSIBILITY OF PRINCIPAL FOR ACTS OF AGENT—AGENT ACTING FOR DIFFERENT PRINCIPALS.

   A depositor in a bank authorized the teller to act as her agent in making and collecting loans, but he was not authorized to draw money from her account, except on checks procured from her. The arrangement was continued for a number of years, during which she gave several hundred checks, aggregating over $90,000. During the same time, without the authority or knowledge of the depositor, the bank permitted the teller from time to time to withdraw money from her account on a "teller's memorandum," which was merely a direction to the bookkeeper to charge her account with a stated sum, and such sums he appropriated to his own use. *Held*, that in such transactions the teller acted in his capacity as an officer of the bank, and not, so far as the bank was concerned, within the apparent scope of his agency for the depositor, and that the bank was liable to her for the amounts so withdrawn.

2. SAME—RATIFICATION.

   The making of a note by the teller in favor of the depositor, which he placed with her securities in the bank, without her knowledge, and upon her merely expressing her willingness to make him a loan on security, when in fact no loan was made and no check was given by her, but the money had previously been wrongfully taken from her account, could not operate to bind her, as a ratification of such withdrawal, nor relieve the bank from liability to her therefor.

3. SAME—UNAUTHORIZED PAYMENT TO AGENT.

   A bank which permits an agent of a depositor to have money transferred from the depositor's account to the credit of a concern which it knows the agent to be chiefly interested in is chargeable with knowledge that he cannot bind his principal in such a transaction, and acts at its peril.

In Error to the Circuit Court of the United States for the Eastern District of Wisconsin.

This suit is brought by Harriet E. Munger, the defendant in error, to recover of the National Bank of Oshkosh, the plaintiff in error, a claimed balance of $14,435.06 of moneys deposited to her account in that bank. Prior to the 1st day of March, 1891, she had a deposit account with the bank, and on that day had a balance to her credit of $822.35. She is the daughter and sole heir at law of Jefferson Bray, deceased, and on April 8, 1891, his executors deposited in the bank to her credit the sum of $23,439.49, and delivered to Frank Heilig, who was, and for 20 years had been, the paying and receiving teller of the bank, a box containing the securities of the estate, and which then belonged to the defendant in error. This was done at her request, she having engaged Heilig as her agent to attend to her estate and to make loans for her. At about that date the cashier of the bank asked her who was going to do her business, and she said Mr. Heilig, that her father had confidence in him, and that she intended to intrust him with her affairs. Heilig kept the box in the vault of the bank, no one but himself having access to it. The defendant in error resided at Oshkosh, in which city the bank was located, until the autumn

Digitized by Google

of 1894, when she removed to the city of Chicago. The custom in the transaction of this business was that Heilig, when he made a loan for her, obtained her check upon the bank for the amount of the loan; and several hundred checks so procured, and signed by her, and aggregating in amount over $92,000, are produced in evidence. He had no authority from Mrs. Munger to draw upon her bank account, except upon checks signed by her. Soon after his agency commenced, and from time to time during the six succeeding years, he drew moneys from the bank, delivering to the bookkeeper of the bank memoranda called "teller's memoranda," which were directions to the bookkeeper to debit Mrs. Munger's account with the moneys stated thereon, and so taken by him. The claim in suit is properly divisible into three classes:

First. The amount taken by Heilig from the bank and appropriated to his own use, for which debit memoranda were made by him and delivered to the bookkeeper, and without check or voucher, or authority from Mrs. Munger. This amount is stated by the court below, and by counsel in this court, to be $13,080.35, while the notes of Heilig, representing the amount abstracted, and which were placed by him in the box containing Mrs. Munger's securities, foot up $13,183. No part of this amount was ever paid to Mrs. Munger, or in any way inured to her benefit. With respect to $5,000, part of the amount, the evidence disclosed that after its appropriation, and without knowledge of it by Mrs. Munger, Heilig, about October 2, 1893, asked her if she would loan him $5,000 upon timber lands, not mentioning where or what they were, and she expressed her willingness to make such loan. Thereupon, without further communication with Mrs. Munger, and without her knowledge, Heilig signed, and placed in the box of Mrs. Munger's securities at the bank, his note for $5,000, dated October 2, 1893, to the order of Mrs. Munger, payable at the National Bank of Oshkosh on or before five years after date, with interest at 6 per cent. per annum. This note contains this further statement:

"Having deposited with the National Bank of Oshkosh certain property (as stated below) as collateral security to this note, for value received I hereby authorize said bank, on the nonpayment of this note at maturity, to sell said property at either public or private sale, with or without further notice to me, and apply the proceeds thereon:

Lands in Michigan, hardwood.
Do " Minnesota, pine."

Indorsed upon the note was the following:

"Southwest quarter section 29, town 60, range 18, Minnesota. Contains 3,200,000 ft. of pine. I own ½ interest. Taxes paid for 1893."

No money was taken upon this note. It was so made and deposited by Heilig to represent so much of prior defalcations.

Second. The sum of $2,665 taken from the bank by Heilig upon like debit memoranda, and disposed of as follows: (a) Wall and Spaulding loan, January 9, 1893, at six months, $1,000. Heilig states that this loan was repaid, but he was unable to say whether Mrs. Munger's account was credited with the amount. The bank book shows that it was not. (b) Loan to Arthur C. Payne June 30, 1894, $100; November 1, 1894, $300,—charged in the bank book to Mrs. Munger's account. It is not possible from the record to reconcile or account for the singular entries respecting this loan. On January 13, 1896, Mrs. Munger's bank account is credited "$160, A. C. Payne," and on March 12, 1896, the account is charged with "$217.67, note A. C. Payne," while the notes of Payne found in the box are dated August 25, 1894, for $300, and June 26, 1896, for $100, and on June 16, 1895, Heilig reported a loan to A. C. Payne of $200. (c) Loans to Pearson Refrigerator & Cold-Storage Company. These loans were all made in the year 1896, as follows: May 11, $350; June 4, $300; August 4, $300; September 5, $115; September 26, $200; total, $1,265. Notes of the company were taken, and placed in the box of Mrs. Munger's securities, bearing the dates stated, each payable one year after date to the order of Mrs. Munger. In this transaction Heilig assumed to act both for Mrs. Munger and for the corporation, in which he was one of the chief parties interested. These loans were made by Heilig after he had severed his connection with the bank, and were done in this way: In each case he made a memorandum, not signed, directing the amount to be credited

Digitized by Google

to the Pearson Refrigerator & Cold-Storage Company, and to be charged to Mrs. Munger, delivering them to the bookkeeper, who made entries accordingly in the books of the bank. Heilig states that no one but an officer of the bank ever makes such memoranda, and that no money is ever paid to an outsider upon a memorandum debit, and that he had free access to the bank after he had left its service. Neither of these loans have been paid, nor had Mrs. Munger any knowledge of them.

Third. The sum of $75 withdrawn on July 24, 1896, from the bank by Heilig upon a like debit memorandum, for his own use, without check or voucher from Mrs. Munger, after he had left the service of the bank, and charged to Mrs. Munger, in the bank book, as loaned under the name of "Ad. Domingo."

It should be noted that the total of all these amounts is $15,820.35,—an excess of $1,385.29 over the amount claimed, $14,435.06, to which sum, with interest, the recovery of the plaintiff below was limited by the court.

The record states that in the autumn of 1894, just previous to Mrs. Munger's removal to Chicago, Heilig had an interview with her at her home, and he says: "Took the box containing bank books, with whatever belonged in it,—the plaintiff's papers. We then and there looked over the plaintiff's matters. Cannot remember whether rendered her a statement. That he knows that they looked over the contents of the box. Exhibit R2 is a statement he furnished the plaintiff. Cannot state when he furnished it. The pencil mark on exhibit R2 my handwriting. S2 is in his handwriting, including the pencil mark on the same. That he made and furnished it to the plaintiff before the plaintiff went to Chicago." On cross-examination, Heilig stated that Mrs. Munger must have seen his note (referring to the $5,000 note). "I compared at her house before she went to Chicago, and each individual note was taken out; * * * checked them up."

There were three statements produced in evidence,—Exhibits R2, S2, and T2. The latter, on its face, refers to receipts and expenditures in the year 1895, and could not have been the statement referred to by Heilig. There is some uncertainty in the evidence respecting which statement was given to Mrs. Munger by Heilig before the former removed to Chicago. The court, in its charge, said that it was not claimed that there was proof of the actual delivery of Exhibit R2 to Mrs. Munger at that particular time, except as it might be determined from the appearance of the paper itself, and left the matter to be determined by the jury. Exhibit R2 contains a statement of Heilig's note for $5,000. Exhibit S2 does not, although it refers to notes of subsequent date. The latter exhibit is manifestly prior in time to the former. Exhibit R2 at the foot, contains a statement in pencil by Heilig of receipts and expenditures, as follows:

		Receipts.	
		Int. Rec. from Jany 1st, 94 to Oct 1st	2477.97
		" 2, Otis	420.
		Timmerman	120.
		Milwaukee	73.50
		Jany 1st 94	3091.47
Expenditures.			
Taxes	289.29		
Mrs. Munger to Sept. 18	1450.		
			1739.29
			1352.18

In pencil on the statement, and in the handwriting of Heilig, is the following:

2000	Beideman	Notes del'd to Mrs. Munger.
2800	D. L. Miller	
12000	Harry & John Munger	
$16800		

Digitized by Google

The record discloses that Exhibits R2 and S2 were introduced in evidence by the bank, but from whom they were obtained does not appear by the record. Certain other exhibits, being letters from Heilig to Mrs. Munger, were produced by her. The court, in its charge to the jury, assumed that a statement was produced at the trial by Mrs. Munger, but did not, nor does the record, identify the one produced. She testified that, before she left Oshkosh for Chicago, Heilig brought the box to her; that she did not personally examine the papers; that he gave her what was supposed to be a memorandum of the contents at that time. She thought it to be one of the papers produced, but did not identify the statement. Mrs. Munger stated that, being about to remove to Chicago, she instructed Heilig that no more loans should be made by him, and that as the loans were paid the principal should be sent to her at Chicago; that she took some notes with her, leaving with Heilig those payable in Oshkosh; and that she had no knowledge of any loans being made by Heilig without her first signing checks therefor. She went abroad in July, 1896, and was absent until December of that year. Upon her return she promptly repudiated and declined to receive all notes signed by Heilig found in the box, and also the notes representing loans to the Pearson Refrigerator & Cold-Storage Company and loans to Arthur C. Payne.

At the trial the court directed a verdict in favor of the plaintiff below for the amount withdrawn by Heilig for his own use, except the sum of $5,000 claimed as a loan, and the $75 withdrawn after Heilig had left the service of the bank. The court submitted to the jury the question whether the $5,000 of the money appropriated by Heilig to his own use was or became a loan from Mrs. Munger, and also whether Heilig was authorized to draw the $75 upon her account. For the sum of $1,265, purporting to be loaned to the Pearson Refrigerator & Cold-Storage Company, the court directed the jury to find a verdict for the plaintiff below; and concerning the other amounts, to wit, the Wall & Spaulding $1,000, and the Payne loans, stated at $400, the court submitted to the jury the question of Heilig's authority to withdraw the moneys for the purpose of making these loans. With respect to the $5,000 matter, the court, referring to the conversation between Heilig and Mrs. Munger, as stated, charged the jury as follows: "Now, that would be testimony, so far, simply to initiate a transaction for a loan. Unless you are satisfied from all the testimony in this case that it was then understood by Mrs. Munger and by Frank Heilig that this was to be considered as sufficient, and that he was authorized to take the money out for that purpose without further consultation with her, without requiring any check from her to cover the amount. * * * that assent alone would not be sufficient to constitute her authority for his taking the $5,000 from her account in the bank. But, even if you should find that she did not so authorize him,—that it was not so understood between her and Heilig,—you should look further in the testimony to ascertain whether she had ratified that act by her subsequent conduct. It appears by the testimony that a statement of account was produced by the plaintiff, upon the demand of the defendant, for the purpose of this trial. That statement has been introduced in evidence. There are three statements, but there is one in particular which mentions a note of Frank Heilig for $5,000. There is no testimony in this case definitely fixing the time when that statement was received by Mrs. Munger. It is not claimed there is proof of its actual delivery to her at that particular time, except as you may determine from the appearance of the paper itself. I think Mr. Heilig states that he did give it to her,—either delivered it to her, or sent it to her, he could not tell which; but he did not attempt to fix the time. If you can, by an inspection of the paper, and a comparison of the figures, and the items contained in it, in connection with the bank books and other statements in this case, ascertain the time when it was delivered to her, you are authorized to do so from all the testimony in the case, and determine if you can at what time it was delivered, for the purpose of ascertaining the fact of any information conveyed to Mrs. Munger of the making of the note for this $5,000. The proposition is correct, generally, that a party cannot be held to have ratified the act of an agent, unless he is wholly and truthfully advised as to all the facts in relation to it. But I doubt whether that would be applicable to the extent of holding that Mrs. Munger would not be chargeable with this sum for the reason alone that Frank Heilig had not

Digitized by Google

told her of the time when he had in fact taken the money. It is claimed that he had at this time taken a much larger amount,—nearly ten thousand dollars. But if Mrs. Munger intended to give him a loan of the five thousand dollars, and believed and understood that the loan was then consummated,—that her consent was then given that he was to draw the money out,—then it is the opinion of the court that Mrs. Munger would be responsible for that amount, and that the bank cannot be held chargeable for the payment so made."

With respect to the loans of $1,000 to Wall & Spaulding, and of $400 to A. C. Payne, and the $75 paid to Heilig by the bank after his relations with the bank as teller had ceased, and appropriated by him to his own use, the court instructed the jury: That the bank had no right to make any charges against Mrs. Munger's account, unless it appeared by the testimony that Heilig had authority, or had good reasons to believe and understand from the conduct of Mrs. Munger towards him that he was authorized, to draw moneys from the bank for the purposes mentioned in these items. That it appeared by the testimony that Heilig had no express authority to do so, either verbal or in writing. If authority to take the money and charge it to Mrs. Munger's account existed, it must be found in her assent to transactions of that kind which actually came to her knowledge, and that she, with full knowledge of the facts, acquiesced in that method of doing the business, and that the burden of proof was with the defendant to show that Heilig was so authorized.

The jury found a verdict in favor of the plaintiff below for the amount claimed, $14,435.06, with interest from date of demand, amounting in all to $15,012.46, upon which judgment was entered, and to reverse that judgment this writ of error is sued out.

Gabe Bouck, for plaintiff in error.

F. C. Winkler and C. F. Fawsett, for defendant in error.

Before WOODS, JENKINS, and GROSSCUP, Circuit Judges.

JENKINS, Circuit Judge, after thus stating the facts, delive opinion of the court.

It is elementary that a principal is bound by the wrongful act of his agent within the scope of the agency. It is also correct to say that a principal is bound by those acts of the agent in pursuance of powers directly conferred, or which were incidental to those powers and not prohibited, "because they are the direct result of his voluntary and intentional act." Mechem, Ag. § 282. This author, in the same section, also asserts the rule to be that the principal "is likewise responsible, and for the same reasons, for those acts which he has intentionally led third persons to believe that he has authorized. He is responsible for the acts of the agent which he has by neglect, omission or acquiescence led the person dealing with the agent to believe he had authorized, because to deny them would be a fraud upon innocent persons." There is, however, a duty resting upon one dealing with the agent of another, and that duty is thus well stated by the same learned author:

"Every person dealing with an agent is bound to ascertain the nature and extent of his authority. He must not trust to a mere presumption of authority, nor to any mere assumption of authority by the agent. He must at all times be able to trace the authority home to its source." Section 289. "The person dealing with the agent must act with ordinary prudence and reasonable diligence. If the character assumed by the agent is of such a suspicious or unreasonable nature, or if the authority which he seeks to exercise is of such an unusual or improbable character, as would suffice to put an ordinarily prudent man upon his guard, the party dealing with him may not shut his eyes to the real state of the case, but should either refuse to deal with the

Digitized by Google

agent at all, or should ascertain from the principal the true condition of affairs." Section 290.

The situation is complicated when the transaction involved is conducted upon both sides by one who is in some manner or in some respects the agent of both principals in the particular matter. In such case a careful scrutiny of the facts surrounding and controlling the transaction is essential, to determine in what particular he was the agent of each principal, and whether the knowledge he possessed of the wrongful act as the agent of the one is imputable to the other principal. The cases to which we are referred discuss these principles at length, but the result in each case is controlled by the particular facts stated. The authorities perhaps may be properly classified as follows: First. Those in which the one principal received, through the intervention and the wrongful act of a mutual agent of the parties, the property of the other principal. In such case the party receiving the property of the other is chargeable with the knowledge of the wrong which was possessed by the mutual agent. Or, to state the proposition shortly, one may not avail himself of the results of his agent's fraud without responsibility for the fraud. Bank v. Cushman, 121 Mass. 490; Loring v. Brodie, 134 Mass. 453; Atlantic Cotton Mills v. Indian Orchard Mills, 147 Mass. 268, 17 N. E. 496; First Nat. Bank of New Milford v. New Milford, 36 Conn. 93; Holden v. Bank, 72 N. Y. 286; Bank v. Dunbar, 118 Ill. 625, 9 N. E. 186. Second. Those cases in which the fraudulent agent, being the agent of both parties, did not in the particular transaction represent the principal sought to be charged, but was, on one side of the transaction, representing himself, and the principal, in person, or others representing him, were upon the other side. In such case knowledge of the wrong is not imputed; otherwise, however, if in the particular transaction the agent acted for both principals. Innerarity v. Bank, 139 Mass. 332, 1 N. E. 282; Bank v. Babbidge, 160 Mass. 563, 36 N. E. 462; Corcoran v. Cattle Co., 151 Mass. 74, 23 N. E. 727; Bank v. Davis, 2 Hill, 451; Bank v. Christopher, 40 N. J. Law, 435; Bank v. Irons, 8 Fed. 1, and note; Bank v. Blake, 60 Fed. 78; Niblack v. Cosler, 74 Fed. 1000, affirmed on appeal in 47 U. S. App. 637, 26 C. C. A. 16, and 80 Fed. 596; In re Plankinton Bank, 87 Wis. 378, 58 N. W. 784. Two cases cited by counsel are possibly exceptional,—not falling within either of the classes specified. In the case of Gunster v. Power Co., 181 Pa. St. 327, 37 Atl. 550, it was held:

"An exception to the general rule that notice to the agent is notice to the principal arises in case of such conduct by the agent as raises a clear presumption that he would not communicate the fact in controversy, as where the agent acts for himself in his own interest, and adversely to that of the principal. Where an agent representing two principals conducts a scheme to defraud one of them, it will be presumed that he did not disclose to the principal he intended to cheat the means by which he intended to effect his purpose. An intended fraud committed by an agent on his own account is beyond the scope of his employment, and bears analogy to a tort willfully committed by a servant for his own purposes, and not as a means of performing the business intrusted to him by his master."

In that case the treasurer of a manufacturing corporation, being also vice president of a bank, executed two promissory notes in the

Digitized by Google

name of the manufacturing corporation, signing them as treasurer. These notes were discounted by the bank, and the manufacturing corporation was given credit for the proceeds. On the same day the treasurer drew the check of the manufacturing corporation "to the order of dft. N. Y." As vice president he caused the amount of the check to be charged to the manufacturing corporation upon the books of the bank, and on the same day, in payment of the check, he drew two drafts upon New York in the name of the bank, and signed by him as vice president, making them payable to his own order. He received payment of the drafts in currency, and used the proceeds for his private purposes. In a suit brought by the bank against the corporation upon its promissory notes, the court ruled that as treasurer of the manufacturing corporation he had the authority to execute the notes and the check for the proceeds of the discount, and that the manufacturing corporation, and not the bank, was liable for the loss. "The real question," says the court, "is, in what capacity did Jessup commit the fraud? It is clear it was as treasurer of the appellee. It was as treasurer he presented the notes for discount, and as treasurer he drew the check for the proceeds. Both acts were within his authority as treasurer, and would have been lawful if they had been honest; but he drew the money on drafts which were the property of the company, and when he embezzled the money it was the money of the company. The bank had no part in his act, and gained nothing by it. The fraud had its inception and consummation in acts done in his capacity of treasurer of the defendant company, and it should bear the loss."

In Daniels v. Bank, 92 Hun, 460, 38 N. Y. Supp. 580, the plaintiff, in 1875, being unmarried, went to Europe, and just previous to her departure left with one Dann, who for a long period had been the secretary, treasurer, and general financial manager of the bank, blank checks, signed by her, to be filled and used by him during her absence as she should direct. She returned the following year, and in April, 1879, without authority, Dann filled one of these checks for $4,000, and used it to cover up his fraudulent transactions with the bank. It was held that the plaintiff was not chargeable by the bank with the check, that the knowledge of Dann was the knowledge of the bank, that he knew of the plaintiff's return from Europe, that his agency had been revoked at the time when the check was filled out, that the bank was chargeable with knowledge of those facts, and that the rule that, when one of two innocent persons must lose, he should bear the loss who made the loss possible, did not apply. The court, in delivering judgment, observed:

"Considerable stress now appears to be laid upon the fact that the check in question was not in any way altered by Dann, and that in filling it up as he did he was acting within the scope of his authority as the plaintiff's agent. The obvious answer, however, is that the agency conferred upon Dann by the plaintiff was for a particular purpose, and to cover only such time as she should be absent from the country, and it undoubtedly terminated with her return to America in 1876. Two years thereafter she changed her name from Enos to Daniels. These facts were, of course, all well known to Dann, and his knowledge was the knowledge of the bank; and, with this knowledge, it is difficult to see anything in this contention upon which the defendant can rest its claim that the plaintiff should be charged with the amount of this check.

Digitized by Google

Again, it is charged that the bank is entitled to the benefit of this check, upon the principle that, when one of two innocent parties must suffer by reason of a fraudulent transaction, it shall be the one whose act made it possible for the fraud to be perpetrated. This principle might be invoked with great propriety if the circumstances of the case were different,—in other words, if Dann sustained the relation of a third party, simply, and had no connection with the bank; but here, confessedly, he was not only the secretary and treasurer of the bank, but he had the general charge of its affairs, and was in fact himself the bank, and, bearing this intimate relation to the bank, it would be a strange perversion of the rule to hold that he might perpetrate a fraud like the one in question, and yet the bank be permitted to profit thereby."

These two cases, upon first blush, might seem not to be in accord. They may perhaps be reconciled upon the ground that in the first case the treasurer of the manufacturing corporation had full power to sign the notes and checks of the corporation, and had actual authority to draw the money from the bank; while in the latter case, the authority of the agent being revoked by the principal's return, the agent was without authority to fill up or use the check, and that as the agent, being the chief financial officer of the bank, conducted the transaction on behalf of the bank, the latter was chargeable with knowledge of the want of authority and of the intended wrong.

We are not, however, called upon to reconcile these cases, if they are divergent; for the case in hand, in our judgment, falls within principles recognized by both cases.

We proceed to inquire which party litigant, within the principles stated, should bear the loss for the moneys withdrawn by Heilig. It is conceded that he had no actual authority from the defendant in error to withdraw moneys from the bank on her account. Heilig himself so states. The conversation stated by the cashier of the bank to have been had with Mrs. Munger gives no color of authority so to do; nor does he venture to say that he so understood, or that he permitted Heilig's acts, relying upon any such statements or assumption. The extent of the agency, so far as the record discloses, was to make loans for Mrs. Munger under her direction, to collect interest, pay taxes, collect moneys paid in on her account, and to deposit them to her credit in the bank. The custom was, upon the making of a loan or upon drawing moneys from the bank, to obtain from her a check for the desired amount, which was presented to the bank, and constituted the latter's authority to charge Mrs. Munger's account. This custom was known to the bank. Over $92,000 was thus paid by the bank upon such vouchers. Heilig was at the time the paying and receiving teller of the bank, and trusted by it with the duty of determining upon the sufficiency of a voucher or check presented to the bank for the payment of money. Thus, unauthorized by Mrs. Munger, he takes to his own possession, and for his own use, moneys of the bank which were in his keeping and under his control as such teller. In so doing, we are clearly of the opinion that he acted as the teller of the bank. He could not do that except as such officer. He made and delivered to the bookkeeper a teller's memorandum for each such amount drawn, directing the charge of the amount to the debit of Mrs. Munger's account. In so doing, in what capacity did he act? These vouchers were certainly not

Digitized by Google

made by or with the authority of Mrs. Munger, nor did they purport so to be made. Heilig himself states, "No one but an officer of the bank ever makes such a memorandum." They were in fact merely the minutes of transactions made by a teller of the bank as a direction to the bookkeeper with respect to charges to be entered in the books, and of course the bank, in making such a debit, must take the responsibility of its correctness, and of the authority of the teller to direct it.

Doubtless Heilig designed to defraud Mrs. Munger, and not the bank; but the acts which he did, the means which he employed, were not within the scope of his agency for Mrs. Munger, but were those which could only be done and employed by an agent of the bank, and in that capacity. It was not otherwise possible to accomplish the theft. In the language of the supreme court of Pennsylvania in Gunster v. Power Co., supra, "The fraud had its inception and consummation in acts done in his capacity" of teller of the bank. The acts themselves furnish no reason to the officers of the bank to infer an apparent, still less an actual, authority from Mrs. Munger. They were acts directly opposed to the custom in all well-ordered banking institutions, in direct contravention of the usual custom of business all over the civilized world, in clear opposition to the custom in which this particular agency was conducted, as the officers of the bank knew, or should have known; for the checks of Mrs. Munger upon this account, to the number of several hundred, and to the amount of over $92,000, were, in the course of business delivered to and honored by the bank. These wrongful acts of Heilig, of themselves, were "of such suspicious and unreasonable nature, and of such unusual and improbable character," to challenge scrutiny and create alarm. The president and cashier of a bank may not shut their eyes to what is going on around them. They are placed in control and supervision of those under them, and that supervision should be vigilant. This dishonest teller, a month after this agency for Mrs. Munger began, was allowed by the bank to take the sum of $4,000, in one sum, and to have it charged by the bank to Mrs. Munger's account upon a debit memorandum made by himself. Such acts were permitted from time to time during a period of six years, without suggesting alarm or inducing inquiry upon the part of the officers of the bank. If, from his long service in the bank, its officers placed undue confidence in Heilig, and failed in careful and vigilant supervision, the bank, and not Mrs. Munger, must assume the responsibility for his unauthorized acts. His conduct should have put an ordinarily prudent man upon his guard. The acts which he did were within his duties as teller, and, within the principles asserted in the Pennsylvania case cited, his knowledge of the wrong was the knowledge of the bank. The loss was made possible by the authority conferred by the bank upon its teller, and therefore we think that the court below was justified in holding that the bank was responsible for these acts of its servant.

With respect to the $5,000, part of the moneys so taken, and represented by the note of Heilig for that amount, it appears that, after

Digitized by Google

more than that amount of money had been abstracted, he suggested to Mrs. Munger the subject of a loan to himself of $5,000 upon timber lands. He did not desire a loan. He was merely seeking to cover up the fraud he had perpetrated upon the bank, and in some way to commit Mrs. Munger to the sanction of his wrongful act as teller, and in directing the charge of that amount to Mrs. Munger's account. He neither suggested the time nor the terms of the proposed loan, nor the property upon which it was to be secured, nor his title thereto. Upon her expression of willingness to make him a loan, and without further negotiation, without any examination of title, without the making of any mortgage, without the submission to her of any facts, and without her knowledge, he signed a note payable to Mrs. Munger in five years, and indorsed upon the back a description of lands in which, it was said, he had a half interest, placed that note in the box containing her securities, which was in his exclusive keeping, and carefully concealed the facts from her knowledge. To seriously speak of this transaction as a perfected loan, which would bind Mrs. Munger and relieve the bank from the act of its dishonest teller, shocks the moral sense. It was no loan of money. It was a bald subterfuge to impose upon her the responsibility for the prior theft by the teller of the moneys of the bank. Condonement of fraud cannot be procured by fraud. In this transaction Heilig assumed to act both for himself and for his principal, and it would require clear evidence of knowledge and assent to hold the principal bound, "for it is against the general law of reason that an agent should be intrusted with power to act for his principal and for himself at the same time." Bank of New York Nat. Banking Ass'n v. American Dock & Trust Co., 143 N. Y. 564, 38 N. E. 714. The court below submitted the question to the jury whether a loan was in fact consummated, and whether Mrs. Munger authorized Heilig to draw the moneys, and charged them that, if such were the case, Mrs. Munger would be responsible, and the bank could not be held for the sum so taken by its teller. It seems to us that the charge was certainly as strongly in favor of the bank upon this branch of the case as it ought to have been. The jury, under the charge, found the issue in favor of the defendant in error, and certainly the bank has no reason for complaint.

With respect to the asserted ratification of this supposed loan of $5,000, it is to be said that ratification must be founded upon knowledge of the facts, and must be an intelligent affirmance and adoption of unauthorized acts. This affirmance is sought to be proven or inferred from the fact that Exhibit R2, which contained a statement of this note of $5,000, was delivered to Mrs. Munger. The testimony of Heilig is not clear upon this question, as he at one time affirmed that he did not, and at another time that he did, deliver it to her, but could not state the time of such delivery. The record does not disclose which party produced that statement at the trial. It is assumed by counsel for the plaintiff in error that this must have been the statement presented to Mrs. Munger, at Oshkosh, in the autumn of 1894, before she removed to Chicago, and this conclusion

Digitized by Google

is deduced from the face of the document. A careful scrutiny of the paper satisfies us that it is not the one then delivered. This paper contains a written statement of certain securities and at the foot, in pencil, in the handwriting of Heilig, is a statement of receipts, including interest from January 1, 1894, to October 1, 1894, and subsequently, footing up $3,091.47, against which sum is the date "January 1, 1894," which is manifestly an error and is intended for January 1, 1895, as the first entry in the column is a statement of interest to October 1, 1894, and the exhibit contains a statement of a loan to Houghton of $1,050, also included in Exhibit S2, which states its date as January, 1894. Again, the paper contains in pencil a statement of notes delivered to Mrs. Munger, which are doubtless the ones which she took with her to Chicago in the autumn of 1894. Upon its face, it would rather seem that, if this statement was produced at that time, it remained in Heilig's keeping, and the writings in pencil were placed there by him after Mrs. Munger's departure. Exhibit S2, which is a statement manifestly prior in time to that of Exhibit R2, has the entry of a loan dated January, 1894, which is subsequent to the date of the Heilig note of $5,000, but that statement makes no mention of the latter. This statement, Exhibit S2, he testifies, he delivered to Mrs. Munger before she went to Chicago. Of course, a statement delivered and retained by a party, which referred to a note of that magnitude, even with imperfect knowledge of the facts, might be strong to show acquiescence; but the doubt which is cast upon the fact of delivery or the time of delivery, coupled with the direct denial by Mrs. Munger of any knowledge of the matter or of the giving of any authority to withdraw the money, renders it peculiarly a question for the jury, and that question was fairly submitted to them by the court below.

With regard to the matter of money loaned to Wall & Spaulding, taken from the bank without the authority of Mrs. Munger, and which Heilig says was repaid to him, and which the bank books show did not go to Mrs. Munger's account or inure to her benefit, upon the principle above stated the bank is responsible for it; for, having delivered the money to its teller without authority of Mrs. Munger, it has no right to charge her account therewith, unless she has knowingly ratified the act, or the bank can show (for the burden rests upon it) that the money has inured to her benefit.

With respect to the loan to Arthur C. Payne, which appears to amount to $400, it need only be said that the matter stands upon the same footing as the loan to Wall & Spaulding, with this exception: That on June 16, 1895, Heilig reported to Mrs. Munger a loan made on one year's time to Payne, of $200. This appears in an account as an expenditure, and is deducted from receipts. It may be doubted whether that fact should be construed into a notice to Mrs. Munger that her agent was drawing moneys from the bank on her account without her check. For all that appears upon the face of the letter, the money may have been taken by him from moneys collected and not deposited. It might perhaps be a ratification of her agent's act in loaning to Payne that amount. The whole matter, however, was fairly submitted to the jury, which has found ad-

Digitized by Google

versely to the plaintiff in error, and we are not at liberty to disturb the verdict. If we were, we should be loth so to do, or to abate the amount, since the total sum to which the plaintiff seems entitled is over $1,300 in excess of the amount claimed and recovered.

The question respecting the loans to the Pearson Refrigerator & Cold-Storage Company, representing the amount of money charged to Mrs. Munger by the bank after Heilig had severed his connection with the bank, and by his direction credited to the Pearson Refrigerator & Cold-Storage Company, in which he was a party chiefly interested, is set at rest by the principles of law herein stated, and the court correctly directed a verdict against the bank for that amount. It could not charge that sum, or any sum, to Mrs. Munger, upon request of her agent acting without authority. It was bound to ascertain the extent of his powers; and, authority being wanting in the agent, and as he could not thus deal for the principal in a matter in which he was personally interested, the bank acts at its peril. Chrystie v. Foster, 26 U. S. App. 67, 72, 9 C. C. A. 606. and 61 Fed. 551. The same remarks are applicable to the sum of $75 which the bank permitted Heilig to take after he had severed his connection with the bank, and which it charged to Mrs. Munger's account. Upon this item the court fairly submitted the question to the jury.

It is charged that Mrs. Munger was grossly negligent in her dealings with her agent. It may not be denied that to some extent she is subject to the charge of neglect. She, without doubt, placed undue confidence in him. But her carelessness and imprudence in no way induced action upon the part of the bank. No act is shown indicating that she had intentionally led third persons to believe that Heilig had authority to draw moneys, or which warranted the bank in so believing; and it does not appear that the bank, in permitting the action of Heilig, acted upon any knowledge of her supposed neglect, or believed that Heilig was so authorized. If nothing may be excused to her by reason of her sex, or by reason of her manifest unfamiliarity with business affairs, what shall be said of trained, experienced, and skilled officers of a bank, who, in contravention of the recognized course of business, have permitted its teller for a series of years to act in disregard of well-settled rules of banking, whereby he used his position, and the means which they placed in his hands, to unlawfully take the moneys of the bank, and who now seek to charge his acts upon one for whom he acted in a limited way, but from whom he had no authority to do in her name the things which the bank permitted him to do. We are satisfied that the verdict is just, and that no reversible error occurred in the submission of the case. We have not dealt in detail with the specific requests to charge, or with the exceptions to the charge as given, because, as we think, under the principles which must govern, the charge was correct. We also take no account of the acts of Mrs. Munger's son during her absence abroad. He acted without authority, and without knowledge of the extent of the agency, or of the things done in pursuance of it. What he did was merely tentative, to protect her estate from possible loss until his mother could be ad-

Digitized by Google

vised. Her repudiation of Heilig's acts immediately upon her return, and upon notice of them, was, we think, timely, and efficient to discharge her of responsibility for them. The judgment is affirmed.

GROSSCUP, Circuit Judge, sat at the hearing, and concurred in the decision of this cause, but, by reason of illness, had no share in the preparation of the opinion.

(95 Fed. 111.)

AMERICAN CREDIT INDEMNITY CO. v. CARROLLTON FURNITURE MFG. CO.

(Circuit Court of Appeals, Second Circuit. May 25, 1899.)

No. 144.

1. INSURANCE—STATEMENTS IN APPLICATION—EXPRESS WARRANTIES.
When there is a distinct agreement that an application for insurance is a part of the contract, and the statements in the application are expressly declared to be warranties, they are to be treated as such, and not merely as representations, and must be strictly true, or the policy will not take effect.

2. SAME—CONSTRUCTION OF CONTRACT—WHAT LAW GOVERNS.
The fact that an application for a policy of insurance against business losses by the insolvency of debtors was made out in the state where the applicant resided does not render the contract subject to the statutes of that state, where the application was forwarded to the company in another state, where the policy was issued, and, so far as appears, where a loss thereunder is payable. Such a policy is a commercial instrument, and governed by the general principles of commercial law, unless the statutes of the state where the contract was made control its construction.[1]

3. SAME—NOTICE OF LOSS—WAIVER.
Mere silence, by failure to reply to a letter regarding a loss, is not a waiver of a positive requirement of the policy as to notice of the loss, when the policy expressly provides that it shall not be held a waiver, and that changes in the conditions of the policy must be in writing, signed by the president or secretary of the company.

4. SAME.
A policy of insurance against business losses by reason of insolvency of debtors contained definitions of insolvency, among which was the return unsatisfied of an execution in favor of the insured. It also required the insured to give notice, within 10 days after learning of the insolvency of a debtor, on blanks furnished by the company, and in the manner prescribed by it. Such blanks contained no reference to insolvency, but required the insured to answer questions as to the "failure" of a debtor, date, nature, etc. *Held*, that the word "failure" was used in its commercial sense, and that confessions of judgments by a debtor who was in business, and a seizure of his stock by the sheriff, causing a suspension of his business, was a "failure" in a commercial sense, and that a report of such failure by the insured within 10 days, with the questions in the company's blanks fully answered, fulfilled the requirements as to notice, and a second notice after the return of an execution unsatisfied was not required.

In Error to the Circuit Court of the United States for the Southern District of New York.

[1] As to credit insurance, see note to Indemnity Co. v. Wood, 19 C. C. A. 271, and note to American Credit Indemnity Co. v. Athens Woolen Mills, 34 C. C. A. 165.

Digitized by Google

This is a writ of error to review a judgment of the circuit court for the Southern district of New York, in favor of the Carrollton Furniture Manufacturing Company, a Kentucky corporation, against the American Credit Indemnity Company, a New York corporation, upon a policy of insurance, dated July 2, 1895, which insured the plaintiff against business losses from the insolvency of debtors on sales and deliveries of goods to be made between July 1, 1895, and July 31, 1896. A rider, subsequently attached to the policy, provided that losses of the kind included in the policy, occurring after the payment of the premium, on sales and shipments made from July 1, 1894, to July 1, 1895, could be proven under the policy in accordance with its terms. The question upon the trial to the jury in regard to the amount of losses related to the loss suffered by the plaintiff in its sales to a firm under the name of Elliott & Cougle, of the city of New York. The jury returned a verdict for the plaintiff for the sum of $5,666.27 and interest, upon which judgment was entered.

Albert Stickney, for plaintiff in error.
William H. Russell, for defendant in error.

Before WALLACE and SHIPMAN, Circuit Judges.

SHIPMAN, Circuit Judge (after stating the facts). In the application for insurance, which was made in Kentucky, the plaintiff warranted the answers to the questions asked by the defendant to be true, and offered these answers as a consideration for the policy to be issued. The policy, subsequently executed, and dated in New York City, declared that it was issued in consideration of the application, which was made part of the contract of indemnity. The answer to the question in regard to gross sales and gross losses was that for each of three years ending in July, 1891, 1892, and 1893, the gross sales were about $100,000. The actual sales for these years were $87,441.61, $99,990.65, and $97,831.06. The gross losses stated in the answer for the same years were $498.90, $1,040.26, and $818.22. The losses as claimed by the defendant for those years were $3,080.74, $2,275.17, and $1,334.59. The important question upon this point was in regard to the amount of losses for the year ending in July, 1891, which the defendant claimed had been reduced to about $1,680, and there was vague testimony about an additional reduction of small amount. The defendant asked the court to charge that the written answers to the questions in the application were express warranties, upon the faith of which the policy was given, and, if untrue, the materiality to the risk was unimportant, and, if not strictly performed, that the plaintiff could not recover. The court charged that, if there was a substantial misrepresentation as to the facts at the time the application was made, the plaintiff was not entitled to recover, but, if the differences were unsubstantial and immaterial, such differences would not stand in the way of its recovery, and, if the difference was between $498.90 and $3,080.74, that would be a material and substantial variation from the amount stated in the application, and would defeat the plaintiff's right to recover. The request in regard to the necessity of strictness in performance of a warranty was not complied with, and, probably from the fact that, as the policy also made misrepresentation and concealment matters in avoidance, the difference between a warranty and representation was not sharply pointed out.

The application contains an unequivocal warranty, and by the ex-

Digitized by Google

press terms of the policy became a part of the contract. Courts have been reluctant to import terms of warranty which were contained in the application or proposition for insurance into the completed agreement, unless the policy clearly manifested the agreement of the parties to the union of the two papers in one contract (Insurance Co. v. Raddin, 120 U. S. 183, 7 Sup. Ct. 500); but when there is a distinct agreement that the application is a part of the contract, and the statements in the application upon which the contract is based are expressly declared to be warranties, the intent of the insured to bind himself to exactness of truth in his answers, although the facts which are called for may seem not material, is clearly and adequately manifested, and "the contract must be enforced according to its terms" (Miles v. Insurance Co., 3 Gray, 580; Campbell v. Insurance Co., 98 Mass. 391; Burritt v. Insurance Co., 5 Hill (N. Y.) 188; Brady v. Association, 20 U. S. App. 337, 9 C. C. A. 252, 60 Fed. 727). Where the assertions or representations upon which the contract is declared to be based are warranties, they must be "strictly true, or the policy will not take effect; and this is so whether the thing warranted be material to the risk or not. It would, perhaps, be more proper to say that the parties have agreed on the materiality of the thing warranted, and that the agreement precludes all inquiry into the subject." Burritt v. Insurance Co., supra. This terse statement by Judge Bronson has been often repeated in various modes of expression, but to the same effect. Jeffries v. Insurance Co., 22 Wall. 47; Insurance Co. v. France, 91 U. S. 510, and the cases previously cited. The answer in regard to the amount of gross sales was expressed to be approximate, but, in regard to the amount of the gross losses which were the result of the business for the year ending in July, 1891, the answer professed to be exact; and the question of a breach of warranty, if any question really existed, rather than that of misrepresentation, should have been submitted to the jury. If no question could exist in regard to the fact of a breach, as would be the case if the actual loss was $1,680, instead of $498, there was no liability under the policy.

The defendant presented upon the argument before this court a statute of Kentucky of February 4, 1874, which provided as follows:

> "All statements in any application for or policy of insurance shall be deemed and held representations and not warranties, nor shall any misrepresentation, unless material or fraudulent, prevent a recovery on the policy."

This statute seems to have been held by the Kentucky court of appeals to relate to statements in an application, irrespective of the fact that it had been agreed by the parties that they were warranties. Insurance Co. v. Rudwig, 80 Ky. 223–234. The application in this case was made in Kentucky, and was, when made and signed, simply a proposition for a bond of indemnity or policy of insurance. It was sent to New York, the proposition was accepted, and a contract of indemnity was thereupon made and executed in New York, and was presumably returned to the other contracting parties in Kentucky. No fact is disclosed which tends to show that the place of performance was to be in Kentucky. We see no reasons why the provisions of a statute of Kentucky should be imported into a contract known by both parties to be made in New York, and, so far as payment by the

Digitized by Google

defendant is concerned, to be performed in St. Louis or in New York. It was, when made, a commercial instrument, and is to be construed in accordance with the general principles of commercial law, unless there are statutes of the state of New York which control its construction. Hyde v. Goodnow, 3 N. Y. 266; Western v. Insurance Co., 12 N. Y. 258; Scudder v. Bank, 91 U. S. 406.

The defendant assigns as error the submission of Elliott & Cougle's claim to the jury, because notice of this claim was not made within 10 days after knowledge of the insolvency, in accordance with the provisions of the policy, and there was no waiver of this provision. The defendant's agreement was a bond of indemnity against loss resulting from "insolvency" of debtors, as defined in the policy. This definition is as follows:

"(11) The term 'insolvency of debtors,' whenever used in this bond, is defined to be: Where a debtor has made a general assignment for the benefit of his creditors; where an attachment for a debt for merchandise shall have been levied on his general stock in trade; where a writ of execution against him shall have been issued in favor of the indemnified, and returned unsatisfied, except where such execution has been so issued and returned after a receiver has been appointed of the property of such debtor; where a receiver of the general stock in trade of a debtor shall have been appointed, and the amount of the claim of the indemnified has been ascertained by final decree in the receivership proceedings, in which event the net loss thus ascertained shall be included in the calculation of losses under this bond."

There is no question that the loss through Elliott & Cougle resulted from their insolvency as thus defined, but the policy required an initial and prompt notification of anticipated losses, and called for a final statement of claims after the expiration of the policy and the payment of the amount due, as follows:

"(4) Notifications of claims must be delivered to this company, on the blanks furnished and in the manner prescribed by it, within ten (10) days after the indemnified shall have had information of the insolvency of any debtor, and must be received at the central office of the company at St. Louis during the term of this bond; otherwise, such claims shall be barred. The company will acknowledge such notifications when received, but the reception of acknowledgment thereof or failure to acknowledge the same shall not be considered to be an admission of liability on the part of this company, or a waiver of any condition or provision of this bond, or of any defect in such notice."

"(12c) A final statement of all claims which have been filed in accordance with condition No. 4 shall be made by the indemnified, and forwarded to the central office of this company at St. Louis, Missouri, in the manner prescribed and upon blank forms, which will be furnished upon application. Such final statement must be received at said office within thirty days after the expiration of this bond; otherwise, all claims hereunder shall be forever barred. The adjustment of claims shall be had within sixty days after the receipt of such final statement by the company, and the amount then ascertained to be due shall at once become payable."

Elliott & Cougle confessed judgment, upon which execution was issued on December 10, 1895, in the supreme court of New York, in favor of various creditors; one of the judgments being in favor of the plaintiff, and its execution being returned unsatisfied on February 10, 1896. On December 14, 1895, the plaintiff notified the defendant of its loss by Elliott & Cougle, which notice was received and acknowledged on December 16th, and on the next day the plaintiff sent to the defendant a particular statement of its account against the debtors,

Digitized by Google

showing the date and the method of shipment of the goods which had been sold. A final statement was sent at the expiration of the policy. As the initial notices were sent on December 14th and 17th, they were sent and received prior to the return of the execution; and it is contended that no notice of loss was ever sent, in accordance with clauses 4 and 11 of the policy, within 10 days after the plaintiff had information of the "insolvency." The plaintiff, if no notice in accordance with clause 4 was sent, seeks to avoid the effect of noncompliance by an alleged waiver by the defendant of the defect. In its acknowledgment of the notice of December 14th it said: "This acknowledgment shall not be held to be a waiver by this company of any condition or provision of the bond." In its letter of December 17th, the plaintiff said: "If you require anything else in this matter, kindly let us know, and we will send it to you,"—and received no reply. In addition to the provisions in regard to waiver, which have already been quoted, a clause in the policy provided that alterations or changes in any of its conditions must be authorized by the company in writing, over the signature of its president or secretary. On July 29, 1896, the plaintiff sent to the defendant, and it received, certified copies of the plaintiff's judgment against Elliott & Cougle, of the execution issued thereon, and of the sheriff's return of nulla bona thereon, but this was long after the return of the execution.

If the terms of the policy require that notice of a loss must be made within 10 days after the insolvency, as defined in clause 11, has taken place, there was a failure to give such notice within 10 days after February 10, 1896, the previous notice was ineffectual because the loss had not occurred, and the claim was barred by the omission, unless compliance with the terms of the policy was waived. Blossom v. Insurance Co., 64 N. Y. 162; Quinlan v. Insurance Co., 133 N. Y. 356, 31 N. E. 31. The alleged waiver is founded entirely upon the silence of the defendant in not replying to the letter of December 17th. Mere silence cannot support a waiver of a positive requirement in the policy, in the face of the stringent terms of the contract, which expressly declare that silence is not a waiver of any defect in the notice of loss, and by the further provision that changes in the conditions of the policy must be in writing, signed by the president or secretary. Walsh v. Insurance Co., 73 N. Y. 5; Baumgartel v. Insurance Co., 136 N. Y. 547, 32 N. E. 990; Moore v. Insurance Co., 141 N. Y. 219, 36 N. E. 191; Marvin v. Insurance Co., 85 N. Y. 278. There are cases in abundance which declare that the retention of defective proofs of loss, and silence in regard to the defect, constitute sufficient evidence of waiver; but these cases relate to contracts of a much less stringent character than that of this policy. Titus v. Insurance Co., 81 N. Y. 410; Gray v. Blum, 55 N. J. Eq. 553, 38 Atl. 646.

This discussion in regard to waiver is of no importance if the notice of December 14th was in accordance with the requirements of clause 4. If a construction of that clause had not been made by the defendant's continuous cotemporaneous definition of its terms, it would seem to require that notification of this claim must be made in 10 days after the return of an unsatisfied execution against Elliott & Cougle, although it is manifest that promptness for the purpose of an

Digitized by Google

investigation was the important point in the first proof of a loss which is not to be paid until the expiration of the policy. The claim, however, requires that proofs must be made upon the blanks furnished by the defendant, and they were made accordingly. The questions in those blanks ask nothing about insolvency, but ask, among other things, the date and the nature of the failure. The word "failure," when used in its commercial sense, and as employed in mercantile life, means a suspension of payment, or an enforced suspension of business, and the nature of the failure means the kind or distinguishing characteristic of the suspension, whether voluntary or enforced. To the first question the plaintiff replied, "December 11, 1895," and to the second, "Confession of judgment." In answer to other questions, the defendant was informed that levies had been made upon the stock of goods to secure the various judgments, and that the sheriff of the county was in charge of the debtor's estate. The plaintiff answered the defendant's questions as asked, which did not relate to insolvency as defined in clause 11, but to the date and kind of failure in its ordinary mercantile sense; and, inasmuch as the defendant received the notice which it required, and as it required, the importance of the definition of insolvency with reference to the notice of loss disappears from the case.

The remaining question in regard to the amount of "initial loss" to be borne by the plaintiff was not argued by the respective counsel. The bond or policy, which was to expire on July 31, 1896, guarantied the defendant to the extent of $10,000, over and above the loss of $1,200 first to be borne by the indemnified, on total gross sales and deliveries of goods amounting to $80,000 or less, to be made between July 1, 1895, and July 31, 1896. The loss first to be borne was 1½ per cent. on gross sales of $80,000, but, should they exceed that amount, the initial loss should increase in like ratio. Afterwards it was agreed that losses, occurring after the payment of the premium, on sales and shipments made from July 1, 1894, to July 1, 1895, "may be proven under this bond in accordance with its terms and conditions, and all other terms to remain in full force." The amount of the losses which were sued for included losses in both years, and the defendant claimed a deduction of initial losses on the whole business of each year. The rider was silent upon the subject of initial loss, and the question was not orally argued by counsel. We prefer not to decide this point until we may have had the benefit of a more full discussion.

The judgment is reversed, with costs.

Digitized by Google

(95 Fed. 116.)

In re KERBY-DENNIS CO.

(Circuit Court of Appeals, Seventh Circuit. June 14, 1899.)

No. 602.

1. BANKRUPTCY—PRIORITY OF LIENS—LABOR CLAIMS.
Where a statute of the state (3 How. Ann. St. Mich. §§ 8427a–8427p) creates a lien in favor of employés performing labor in the manufacture of lumber, but provides that the debt or claim shall not remain a lien on the product unless a statement thereof is filed within 30 days, and action begun within 3 months, holders of such liens, perfected according to the statute, against the estate of the employer in bankruptcy, are entitled to payment in full out of the proceeds of the property affected, in preference to claims for labor of the same kind which have not been preserved as the statute directs, although both classes of claims are equally within the description of claims for "wages," as to which the bankruptcy act declares that they shall "have priority and be paid in full out of bankrupt estates." Bankruptcy Law, § 64b.

2. SAME.
A lien for the wages of labor created by such a statute, and preserved in force according to its directions, is not dissolved by an adjudication in bankruptcy against the employer, under section 67f of the bankruptcy act (30 Stat. 564), providing that "liens obtained through legal proceedings against a person who is insolvent, at any time within four months prior to the filing of a petition in bankruptcy against him, shall be deemed null and void in case he is adjudged a bankrupt."

3. SAME—PRESERVATION OF LIENS—CONSTRUCTION OF BANKRUPTCY ACT.
A statutory lien for the wages of labor is not dissolved or annulled by proceedings in bankruptcy against the employer, merely because such liens are not expressly preserved by the bankruptcy act. On the contrary, the intention of the bankruptcy act is to protect all liens, whether arising by contract or by statute, except only such as are expressly declared to be annulled or invalidated.

In Bankruptcy. Review of an order of the district court of the United States for the Eastern district of Wisconsin.

T. W. Spence, for petitioners.

Before BROWN, Circuit Justice, and WOODS and JENKINS, Circuit Judges.

JENKINS, Circuit Judge. The Kerby-Dennis Company, a corporation under the laws of the state of Wisconsin, and doing business at Marinette, in that state, was duly adjudged a bankrupt in the district court of the United States for the Eastern district of Wisconsin, upon a petition filed November 1, 1898, being at the time the owner of a large amount of logs, posts, ties, and shingles, upon and in the production of which labor had been performed within three months prior to the filing of the petition in bankruptcy by a number of laborers, including the petitioners. The labor claimants are divisible into two classes,—the one class comprising those who on the 27th of October, 1898, filed claims for liens with the clerk of the circuit court of Alger county, in the state of Michigan, where the product was situated, for the amount of the indebtedness due them, respec-

Digitized by Google

tively, for work and labor, and who thereafter prosecuted suits against the bankrupt corporation, and seized the property upon which the labor had been performed. After the appointment of a trustee in the bankruptcy proceedings, by stipulation, the property covered by the labor liens, and attached in the suits in the courts of Michigan, was turned over to the trustee in bankruptcy, without prejudice to the validity and priority of such labor lien claims, which were continued and made operative upon the proceeds of the sale of the property so turned over. The other class of claimants is composed of those who had performed like services in the production of the property, but had failed to file claims for liens under the statute of the state of Michigan. That statute provides that any person performing labor or services in manufacturing lumber or shingles "shall have a lien thereon for the amount due for such labor or services, and the same shall take precedence of all other claims or liens thereon." The statute also provides that any such debt, demand, or claim shall not remain a lien on any of the mentioned products unless a statement thereof in writing, made under oath by the claimant or some one in his behalf, shall be filed in the office of the clerk of the county in which such labor or service was performed, which statement of lien shall be filed within 30 days after the completion or last day of such labor or service; and that any sale or transfer of the products upon which the lien is claimed during the time limited for the enforcement of the same shall not affect the lien, but the lien shall remain and be enforced against such products, in whosesoever possession the same shall be found. The statute also provides that the lien may be enforced by attachment against any of the products in the designated courts of the state, and that such lien claims shall cease to be a lien upon the property named in such statement unless suit be commenced within three months after the filing of the statement for lien. 3 How. Ann. St. Mich. §§ 8427a–8427p.

The referee in bankruptcy on April 25, 1899, directed the trustee to apply the fund to the payment of a pro rata dividend upon all the claims for labor and services approved and allowed by the court, entitled to priority under the provisions of subdivision 4, par. b, § 64, of the national bankruptcy act, "without distinction or preference as to whether said labor claims had secured or attempted to secure liens upon any of the property of said bankrupt prior to the adjudication in bankruptcy, under the provisions of sections 8427a–8427p of Howell's Annotated Statutes of the State of Michigan." The district court, on the 23d day of May, 1899, reversed that order, and adjudged that the claims of those who had filed their statements of liens were entitled to priority of payment out of the proceeds of the property covered thereby, as against the claims of laborers who had no liens under any state law or otherwise upon the property, and that the proceedings in the state court to secure the liens were unaffected by the proceedings in bankruptcy, and entitled to recognition by the bankruptcy court with the same force and effect as though the same had been enforced in the courts of the state. 94 Fed. 818. Whereupon, on the 3d day of June, 1899, the claimants so postponed filed their original petition in this court, asking for a review and reversal of the order of the dis-

Digitized by Google

trict court, and for instruction to the trustee to apply the proceeds of the property without distinction or preference.

The claims secured by labor liens amount to about $7,000; the like claims not so secured amount to about $8,000. The question presented is whether these labor liens secured by the statute of Michigan should be preferred to the claims for like work not so secured. We cannot doubt that the statute of Michigan gives to a laborer a lien for his services which results from the performance of, and exists from the commencement of, the work, and is not created by the proceedings to enforce the lien, but only continued or secured thereby. The proceedings under the statute are merely the means for the preservation and enforcement of a pre-existing lien given by the statute, and arising from the performance of the service. In re Hope Min. Co., 1 Sawy. 710, Fed. Cas. No. 6,681. The statute itself clearly demonstrates this. It provides that the claim or demand, shall not "remain a lien" upon the product, unless a statement of the claim is filed, and proper suit instituted, within a certain period. It speaks a lien pre-existing the statement of claims and the suit.

It is insisted however that the bankruptcy act does not preserve these liens. It is said that to hold them valid would be in antagonism to subdivision f of section 67 of the act, which provides "that all levies, judgments, attachments or other liens obtained through legal proceedings against a person who is insolvent, at any time within four months prior to the filing of a petition in bankruptcy against him, shall be deemed null and void in case he is adjudged a bankrupt, and the property affected by the levy, judgment, attachment or other lien shall be deemed wholly discharged and released from the same and shall pass to the trustee as a part of the estate of the bankrupt," etc. But it is to be observed that the lien in the case before us was not obtained through "legal proceedings." It is a creature of the statute, arising from, and immediately upon, the performance of labor. The legal proceedings contemplated by the statute do not create a lien, but enforce a lien already existing.

It is also urged that since the bankruptcy act does not, as did a former bankruptcy act, expressly reserve liens of this character, therefore they are not entitled to protection. It is possible, perhaps, for congress to interfere with vested rights, and to impair obligations of contracts; but such legislation would be opposed to equity and good conscience, and the intention of congress so to enact cannot be presumed, in the absence of clear and unmistakable expression. We find in the bankruptcy act no such design. To the contrary, we find provisions, like that quoted, which direct that certain liens shall be invalid. For instance, by section 67a, "claims which for want of record or for other reasons would not have been valid liens, as against the claims of the creditors of the bankrupt, shall not be liens against his estate"; and, by section 67c, "a lien created by or obtained in or pursuant to any suit or proceeding at law or in equity * * * shall be dissolved," etc. The act also provides (section 67d) "that liens given or accepted in good faith and not in contemplation of or in fraud upon this act, and for a present consideration, which have been recorded according to law, if record thereof was necessary, in

Digitized by Google

order to impart notice, shall not be affected by this act." It is thus clear to us that the design of congress was to protect all liens, whether arising by contract or by statute, and only to avoid those which are in fraud of the act, and those which have been secured by, and arise from, legal proceedings within the limited time specified before the bankruptcy. "Expressio unius, est exclusio alterius." We cannot indulge the presumption that congress intended to avoid a lien secured by the act of labor, and preserved and continued in force only when legal proceedings were instituted within a specified time. Such construction would avoid all mechanics' liens, and all the liens of laborers, which the laws of the various states have for years sought to protect and to prefer.

The question is not affected by the provisions of section 64, subds. a, b. That section directs the order of distribution of the estate after the assets have been marshaled and the liens discharged, and provides for the priority of payment of labor claims not otherwise secured. It is true that the petitioners here, with respect to the character of their services and labor, stand equal in equity to the claims of those which were allowed preference by the decision of the court below. The apparent inequity, in now denying equality, results, however, not from the bankruptcy act, but from their own omission to comply with the requirements of the local law. Both of these classes of laborers had liens upon the product upon which their labor was expended. The one class preserved their liens by proper proceedings, which the statute giving the lien rendered imperative for its continuance. The other class omitted so to do, and therefore, by force of the statute which created the right, the lien is gone forever. We are of opinion that the decree of the court below is correct, and must be affirmed, and that the prayer of the petitioners should be denied. The clerk will certify the decision to the court below.

MEMORANDUM DECISIONS.

(95 Fed. 1006.)

GEO. M. WEST CO. v. LEA BROS. & CO. et al. (Circuit Court of Appeals, Fourth Circuit. Feb. 24, 1899.) No. 305. Appeal from the District Court of the United States for the Eastern District of Virginia. Henry & Williams, for appellant. Dawson & Seaton, for appellees. Questions certified to the supreme court of the United States. See 19 Sup. Ct. 836; 91 Fed. 237.

(95 Fed. 1006.)

KING v. RITTER et al. (Circuit Court of Appeals, Fourth Circuit. May 3, 1899.) No. 307. Appeal from the Circuit Court of the United States for the District of West Virginia. M. F. Stiles, for appellant. Brown, Jackson & Knight and Mr. Rucker, for appellees. Dismissed for failure to print record, pursuant to the twenty-third rule.

Digitized by Google

(95 Fed. 1007.)

McDONALD v. WILLIAMS. (Circuit Court of Appeals, Second Circuit.) Questions of law certified to the supreme court of the United States. See 19 Sup. Ct. 743, 174 U. S. 397.

(95 Fed. 1007.)

UNITED STATES v. HARSHA. (Circuit Court of Appeals, Sixth Circuit.) Questions of law certified to the supreme court of the United States. See 19 Sup. Ct. 294, 172 U. S. 567; 6 C. C. A. 178, 56 Fed. 953; 34 C. C. A. 690, 92 Fed. 1023.

(95 Fed. 1007.)

UNITED STATES v. HIRSCH et al. (Circuit Court of Appeals, Second Circuit. January 24, 1899.) No. 48. Appeal from the Circuit Court of the United States for the Southern District of New York. Henry C. Platt, for appellant. Before WALLACE, LACOMBE, and SHIPMAN, Circuit Judges.

PER CURIAM. Affirmed, in open court, on authority of U. S. v. Stoddard (decided in First circuit) 34 C. C. A. 175, 91 Fed. 1005. See 87 Fed. 194.

(95 Fed. 1007.)

UNITED STATES v. ISELIN et al. (Circuit Court of Appeals, Second Circuit. January 24, 1899.) No. 56. Appeal from the Circuit Court of the United States for the Southern District of New York. Henry C. Platt, for appellant. Before WALLACE, LACOMBE, and SHIPMAN, Circuit Judges.

PER CURIAM. Affirmed, in open court, on authority of U. S. v. Stoddard, Haserick, Richards & Co. (decided in First circuit) 34 C. C. A. 175, 91 Fed. 1005. See 87 Fed. 194.

END OF CASES IN VOL. 36.

Digitized by Google

Digitized by Google

INDEX.

ABANDONMENT.

Of homestead, see "Homestead," § 1.

ACCORD AND SATISFACTION.

An agreement to accept notes of a third person in part payment of a debt, and to extend the time for payment of the remainder, on the giving of certain security, must be fully executed before it can be pleaded as an accord and satisfaction.
—First Nat. Bank v. Leech, 94 Fed. 310.....36 C. C. A. 262

ACCRUAL.

Of right of action, see "Limitation of Actions," § 2.

ACTION.

By trustee in bankruptcy, see "Bankruptcy," § 2.
Criminal prosecutions, see "Criminal Law."
Dismissal of action, see "Dismissal and Nonsuit."
For breach of contract, see "Contracts," § 3.
Foreclosure of mortgage, see "Mortgages," § 4; "Railroads," § 3.
For infringement of patent, see "Patents," § 3.
Jurisdiction of courts, see "Courts."
Limitation by statutes, see "Limitation of Actions."
Malicious actions, see "Malicious Prosecution."
On insurance policies, see "Insurance," § 8.
Parties to actions, see "Parties."
Review of proceedings, see "Appeal and Error."
Setting aside fraudulent conveyance, see "Fraudulent Conveyances," § 1.
Stay of proceedings, see "Appeal and Error," § 5.
Suits in admiralty, see "Admiralty"; "Maritime Liens," § 3.
—— in equity, see "Equity."

§ 1. **Joinder, splitting, consolidation, and severance.**
Rev. St. § 921, authorizing consolidation of suits, applies as well to suits in equity as at law, and the consolidation of two suits in equity is within the sound discretion of the court, but suits consolidated remain separate as to parties, pleadings, and decrees, unless otherwise directed.
—Toledo, St. L. & K. C. R. Co. v. Continental Trust Co., 95 Fed. 497; Hamlin v. Same, Id.; Rose v. Same, Id.....36 C. C. A. 155

ADEQUATE REMEDY AT LAW.

Effect on jurisdiction of equity, see "Equity," § 1.

Digitized by Google

ADJUDICATION.

Operation and effect of former adjudication, see "Judgment," § 2.

ADMINISTRATION.

Of property by receiver, see "Receivers," § 1.

ADMIRALTY.

See "Maritime Liens"; "Salvage"; "Seamen"; "Shipping."

§ 1. **Jurisdiction.**

In the exercise of their admiralty and maritime jurisdiction, the United States courts are governed solely by the legislation of congress and the general principles of maritime law. Accordingly, they are not bound by state statutes of limitation.

—Pacific Coast S. S. Co. v. Bancroft-Whitney Co., 94 Fed. 180..... 36 C. C. A. 135

§ 2. **Remedies in personam and in rem.**

A court of admiralty acquires its jurisdiction over a libel in rem for breach of a contract of affreightment by the filing of the libel, and it is immaterial that the vessel is not within the territorial limits of the court at that time, where she is subsequently seized therein on alias monition.

—Pacific Coast S. S. Co. v. Bancroft-Whitney Co., 94 Fed. 180..... 36 C. C. A. 135

§ 3. **Parties, process, claims, and stipulations or other security.**

In a suit in rem for collision, where the vessel attached had been released on stipulation, on the insolvency of claimant's sureties an order was made pursuant to a rule of court requiring the claimant to furnish additional security, and, on a failure to comply with such order, the claimant's answer was stricken out, and a decree entered pro confesso for an amount of damages ascertained on a reference by a commissioner. *Held*, that the striking out of the answer and entry of the decree could not be deemed a punishment of the claimant for failure to obey the court's order, but was a proper procedure to bring to an end a proceeding in rem in which, through the fault of the claimant, the libelant had neither the res nor security.

—The Fred M. Lawrence, 94 Fed. 1017.....36 C. C. A. 631

§ 4. **Appeal.**

Where the evidence in a suit in admiralty is taken before an examiner, the decision of the trial court on questions of fact is not entitled to the same controlling weight as where the judge saw and heard the witnesses testify, and will be more readily reviewed by an appellate court.

—The Sappho, 94 Fed. 545.....36 C. C. A. 395

An assignment "that the court erred in holding that libelant was entitled to any compensation for the injuries received" by him is too general.

—Lafourche Packet Co. v. Henderson, 94 Fed. 871...36 C. C. A. 519

ADOPTION.

The measure of damages for breach of a contract by one person to adopt another and make the latter an heir, under the law of Pennsylvania, is not the value of the share of the promisor's estate at his death which would have been inherited by the promisee, but the value of the services rendered or outlay incurred by the promisee on the faith of the promise, with interest.

—Sandham v. Grounds, 94 Fed. 83.....36 C. C. A. 103

Digitized by Google

Where a contract for adoption was to be performed in a certain state, and the estate to which the person to be adopted would thus have become an heir is there situated, the law of such state governs as to the measure of damages for a breach of the contract.
—Sandham v. Grounds, 94 Fed. 83.....36 C. C. A. 103

AFFREIGHTMENT.

Contracts, see "Shipping," § 2.

AGENCY.

See "Principal and Agent."

AGREEMENT.

See "Contracts."

AMOUNT IN CONTROVERSY.

Jurisdictional amount, see "Courts," § 1.

APPEAL AND ERROR.

In admiralty, see "Admiralty," § 4.

§ 1. **Decisions reviewable.**
No appeal lies from a decree refusing leave to intervene and become a party.
—Toledo, St. L. & K. C. R. Co. v. Continental Trust Co., 95 Fed. 497; Hamlin v. Same, Id.; Rose v. Same, Id.....36 C. C. A. 155

To constitute a final judgment for purpose of appeal it is not essential that it should be a bar to another suit.
—Colorado Eastern Ry. Co. v. Union Pac. Ry. Co., 94 Fed. 312..... 36 C. C. A. 263

An order of dismissal for want of prosecution, with judgment for costs, is a final judgment, from which an appeal will lie.
—Colorado Eastern Ry. Co. v. Union Pac. Ry. Co., 94 Fed. 312..... 36 C. C. A. 263

§ 2. **Presentation and reservation in lower court of grounds of review.**
An objection to the sufficiency of a verdict cannot be urged in an appellate court, where the bill of exceptions does not show that the defect was called to the attention of the trial court, and proper exception taken to its action thereon.
—Case v. Hall, 94 Fed. 300.....36 C. C. A. 259

§ 3. **Parties.**
Where a decree provided in general terms for a conveyance and release by two defendants, who were husband and wife, of all their rights, titles, and interests in certain real estate, the title to a part of which was in the husband and a part in the wife, but under the statutes of the state each had a dower interest in the realty owned by the other, such decree, as to all of the property involved, affects rights of both defendants; and neither can maintain an appeal without joining the other, or obtaining an order of severance.
—Hook v. Mercantile Trust Co. of New York, 95 Fed. 41..... 36 C. C. A. 645

§ 4. **Requisites and proceedings for transfer of cause.**
With reference to the rule that there is no necessity for issuance of citation where appeal is taken in open court, one who appears for the purpose

Digitized by Google

of making a motion to dismiss, even though the motion relates to a want of jurisdiction and lack of proper service, is in court for all purposes relating to the disposition of the motion, whether on appeal or otherwise.
—Pike v. Gregory, 94 Fed. 373.....36 C. C. A. 299

§ 5. **Supersedeas or stay of proceedings.**
An undertaking on appeal given to stay proceedings pending the appeal is not delivered, so as to become effective, until filed, and hence, though signed in another state, is "executed" in the state where filed.
—Howard Ins. Co. of New York v. Silverberg, 94 Fed. 921.....
36 C. C. A. 549

§ 6. **Record and proceedings not in record.**
The evidence taken in an equity cause in a federal court must be made a part of the record and certified on appeal, otherwise it will be disregarded; and, unless the record contains some evidence to sustain the finding, the decree will be reversed.
—Mears v. Lockhart, 94 Fed. 274.....36 C. C. A. 239

The charge of a trial court is no part of the record, and cannot be noticed on appeal, unless brought into the record by the bill of exceptions, and without such charge before the court the refusal to give instructions requested cannot be reviewed.
—Case v. Hall, 94 Fed. 300.....36 C. C. A. 259

Neither testimony nor instructions can be added to a bill of exceptions after it is signed and filed, by stipulation of counsel in the appellate court.
—Case v. Hall, 94 Fed. 300.....36 C. C. A. 259

§ 7. **Assignment of errors.**
A party cannot assign as error a finding of a judge or referee made at his request.
—National Loan & Investment Co. v. Rockland Co., 94 Fed. 335.....
36 C. C. A. 370

Where, on appeal from a final order of the district court granting a discharge to a bankrupt, no assignment of errors is filed in such court, as required by rule 11 of the circuit courts of appeal (31 C. C. A. cxlvi., 90 Fed. cxlvi.), the judgment of the district court will be affirmed.
—In re Dunning, 94 Fed. 709.....36 C. C. A. 437

§ 8. **Dismissal, withdrawal, or abandonment.**
That the court below had no jurisdiction of the parties cannot be made the basis of a motion to dismiss an appeal.
—Pike v. Gregory, 94 Fed. 373.....36 C. C. A. 299

A failure to join necessary parties on an appeal is jurisdictional, and a motion to dismiss on that ground may be entertained at any time before final disposition of the appeal.
—Hook v. Mercantile Trust Co. of New York, 95 Fed. 41.....
36 C. C. A. 645

§ 9. **Hearing and rehearing.**
It is the intention of the court that the granting of a rehearing without restriction shall operate to vacate its judgment, so that thereafter the cause shall stand as if no judgment had been entered.
—Hook v. Mercantile Trust Co. of New York, 95 Fed. 41.....
36 C. C. A. 645

§ 10. **Review.**
The action of a trial court in denying a motion for judgment on the ground of a variance, and in permitting the amendment of the declaration, after the conclusion of plaintiff's evidence, to conform to the proof, is not an abuse of discretion, where it is not claimed that defendant was misled by the variance to his prejudice.
—Southern Exp. Co. v. Platten, 93 Fed. 936.....36 C. C. A. 46

Digitized by Google

In determining whether a judgment is supported by a special finding, the sufficiency of the facts found is the sole question to be determined, and hence the admission of evidence of immaterial facts is not error.
—Lamson v. Beard, 94 Fed. 30; C. B. Congdon & Co. v. Same, Id.; Phelps v. Same, Id.....36 C. C. A. 56

Refusal to direct a verdict for defendant at close of plaintiff's case cannot be assigned as error.
—Detroit Crude-Oil Co. v. Grable, 94 Fed. 73.....36 C. C. A. 94

While the findings of fact made by the court are not as conclusive as the findings of a jury, they are presumptively correct, and will not be disturbed by the appellate court, unless they are against the weight of evidence.
—Dickey v. Dickey, 94 Fed. 231.....36 C. C. A. 211

It is the settled rule of the supreme court and the circuit courts of appeals that, where a case is tried by a federal court without a jury, the sufficiency of the evidence to sustain its general findings of fact cannot be considered by the appellate court.
—Supreme Lodge, Knights of Pythias, v. England, 94 Fed. 369..... 36 C. C. A. 298

The findings of the chancellor on a question of fact will not be disturbed, unless clearly shown to be against the weight of evidence.
—Lansing v. Stanisics, 94 Fed. 380.....36 C. C. A. 306

A circuit court of appeals will not disturb an interlocutory order granting an injunction where the questions of law or fact to be ultimately determined are difficult, and injury to the moving party will be immediate, certain, and great if the relief is denied, while the loss of the opposing party will be comparatively small if it is granted.
—Dimick v. Shaw, 94 Fed. 266.....36 C. C. A. 347

The court will not review the verdict of a jury where there is some evidence to sustain it, although it may be against the apparent weight of evidence.
—Western Coal & Mining Co. v. Berberich, 94 Fed. 329..... 36 C. C. A. 364

As to the weight and effect of the evidence, the finding of a circuit court, where a jury is waived by stipulation in writing, is as conclusive on a writ of error as the verdict of a jury.
—State Nat. Bank v. Smith, 94 Fed. 605.....36 C. C. A. 412

When a decree dismissing a bill absolutely is erroneous, in that the dismissal should be without prejudice, the court will modify it on appeal, though complainant does not urge the error.
—Harrison v. Farmers' Loan & Trust Co. of New York, 94 Fed. 728 .....36 C. C. A. 443

APPORTIONMENT.

Of salvage compensation, see "Salvage," § 2.

ASSAULT AND BATTERY.

§ 1. **Civil liability.**
In an action of tort to recover damages for an assault and battery, where there is proof of substantial physical hurt and injury, the plaintiff is entitled to recover compensation for the mental pain and suffering that necessarily resulted from the original injury.
—Southern Exp. Co. v. Platten, 93 Fed. 936.....36 C. C. A. 46

A declaration to recover for an assault alleged to have been committed on plaintiff by representatives and agents of defendant in the course of

Digitized by Google

their employment is not demurrable because it fails to state the names of some of the assailants, alleged to be unknown to plaintiff.
—Southern Exp. Co. v. Platten, 93 Fed. 936.....36 C. C. A. 46

ASSIGNMENT OF ERRORS.

See "Appeal and Error," § 7.

ASSIGNMENTS.

Assignment of debt on Sunday, see "Sunday."

ASSOCIATIONS.

See "Building and Loan Associations."

ASSUMPTION.

Of risk by employé, see "Master and Servant," § 2.

ATTORNEY AND CLIENT.

§ 1. **Compensation and lien of attorney.**
A contract between attorney and client for the rendition of legal services in connection with an estate to which the client was an heir, providing that the attorney's compensation should "in no event be more" than that received from other heirs similarly interested, nor more than a certain per cent. of the amount recovered for the client, does not fix the amount of compensation, but merely imposes maximum limits thereto, leaving the amount to be determined on a quantum meruit, within such limits.
—Russell v. Young, 94 Fed. 45.....36 C. C. A. 71

BAILMENT.

Where a dealer in musical instruments placed a piano on a steamer as an advertisement, under a verbal agreement with the captain under which it could be removed at any time, at the option of either party, such piano remained the property of the dealer, and did not become any part of the furniture of the vessel, so as to pass under a mortgage of the vessel and her apparel and furniture; nor did it pass under a sale of the vessel in admiralty as a part of her property, it having been removed by leave of court after her seizure, but before the sale.
—Learned v. Brown, 94 Fed. 876; Rumble v. Same, Id.....
36 C. C. A. 524

BANKRUPTCY.

§ 1. **Petition, adjudication, and warrant.**
A debtor made a general assignment for the benefit of creditors under a state statute providing for the administration and distribution by the state courts of estates so assigned, and requiring creditors to file their claims within three months after notice from the assignee, on pain of being postponed until all proving creditors were paid in full. The time having not yet arrived when a petition in involuntary bankruptcy could be filed under the act of 1898, certain creditors filed their claims with the assignee; being then in ignorance of facts tending to show that the assignment was

Digitized by Google

fraudulent, and that the debtor had disposed of property in fraud of creditors. No dividend was declared under the assignment, nor any judicial action taken on the claims filed. *Held*, that such creditors were not estopped to maintain a petition in involuntary bankruptcy against the debtor.
—In re Curtis, 94 Fed. 630.....36 C. C. A. 430

Where a judgment previously recovered against the bankrupt still appears on the records of the court, which rendered it as an unsatisfied obligation against him in favor of the judgment creditor, it is rightly included in the bankrupt's schedule as a debt due to that creditor, although it has actually been sold to another creditor, and the bankrupt is chargeable with knowledge of the sale.
—Sellers v. Bell, 94 Fed. 801.....36 C. C. A. 502

Where a proposed voluntary bankrupt, who has no property except such as is exempt, borrows $50, wherewith to pay the fees and costs of his attorney, just before filing his petition, he is not required to list the amount so borrowed in his schedule of assets, and his omission to do so is no ground of opposition to his discharge.
—Sellers v. Bell, 94 Fed. 801.....36 C. C. A. 502

A proposed voluntary bankrupt, who has not money enough to pay the filing fees, is not required to solicit gifts or loans from his friends for that purpose; and he is not guilty of a false oath in making affidavit that he "cannot obtain" the requisite sum, although it appears that friends would have advanced him the amount if requested.
—Sellers v. Bell, 94 Fed. 801.....36 C. C. A. 502

A voluntary bankrupt, whose petition is accompanied by an affidavit that he is without and cannot obtain the money necessary to pay the filing fees, cannot subsequently be required to pay such fees out of any property set apart to him as exempt, or out of money earned by him after the filing of the petition.
—Sellers v. Bell, 94 Fed. 801.....36 C. C. A. 502

§ 2. Assignment, administration, and distribution of bankrupt's estate.

A sheriff, holding property of an involuntary bankrupt under writs levied within four months before the commencement of the proceedings in bankruptcy, has no right, as against the trustee, to retain possession of the property until payment of his fees. Such fees are taxable in the court from which the writs issued, and, when there taxed and allowed, may be made the basis of a claim in the court of bankruptcy.
—In re Francis-Valentine Co., 94 Fed. 793.....36 C. C. A. 499

Where actions are begun in a state court, and writs issued and levied on property of an insolvent debtor, within four months before the institution of proceedings in involuntary bankruptcy against him, the trustee is entitled to recover possession of such property from the sheriff holding the same under the levy, notwithstanding the pendency of an action of replevin in a state court against the sheriff by a stranger claiming ownership of the property; and the court of bankruptcy has jurisdiction to order the surrender of the property on summary petition by the trustee.
—In re Francis-Valentine Co., 94 Fed. 793.....36 C. C. A. 499

The district court, as a court of bankruptcy, has no jurisdiction of a petition by a trustee in bankruptcy for the cancellation of a conveyance of land previously made by the bankrupt to his wife, and alleged to have been fraudulent as to creditors, and for the recovery of the land for the benefit of the estate, nor to enjoin the bankrupt's wife from prosecuting a suit against the trustee to recover personal property claimed by her.
—Camp v. Zellars, 94 Fed. 799.....36 C. C. A. 501

A statutory lien for the wages of labor is not dissolved or annulled by proceedings in bankruptcy against the employer, merely because such liens are not expressly preserved by the bankruptcy act. On the contrary, the intention of the bankruptcy act is to protect all liens, whether arising

Digitized by Google

by contract or by statute, except only such as are expressly declared to be annulled or invalidated.

—In re Kerby-Dennis Co., 95 Fed. 116.....36 C. C. A. 677

Where a statute of the state (3 How. Ann. St. Mich. §§ 8427a-8427p) creates a lien in favor of employés performing labor in the manufacture of lumber, but provides that the debt or claim shall not remain a lien on the product unless a statement thereof is filed within 30 days, and action begun within 3 months, holders of such liens, perfected according to the statute, against the estate of the employer in bankruptcy, are entitled to payment in full out of the proceeds of the property affected, in preference to claims for labor of the same kind which have not been preserved as the statute directs, although both classes of claims are equally within the description of claims for "wages," as to which the bankruptcy act declares that they shall "have priority and be paid in full out of bankrupt estates." Bankruptcy Law, § 64b.

—In re Kerby-Dennis Co., 95 Fed. 116.....36 C. C. A. 677

A lien for the wages of labor created by such a statute, and preserved in force according to its directions, is not dissolved by an adjudication in bankruptcy against the employer, under section 67f of the bankruptcy act (30 Stat. 564), providing that "liens obtained through legal proceedings against a person who is insolvent, at any time within four months prior to the filing of a petition in bankruptcy against him, shall be deemed null and void in case he is adjudged a bankrupt."

—In re Kerby-Dennis Co., 95 Fed. 116.....36 C. C. A. 677

§ 3. Rights, remedies, and discharge of bankrupt.

The bankrupt's omission to keep books of account cannot be made a ground of opposition to his discharge, when it appears that, since a time more than three years prior to the passage of the bankruptcy act, he has not been engaged in any business to which the keeping of books would be necessary or appropriate.

—Sellers v. Bell, 94 Fed. 801.....36 C. C. A. 502

Under Code Ala. § 2037, exempting from execution personal property to the amount of $1,000, and, in addition thereto, "all necessary and proper wearing apparel," a watch may be included in the term "wearing apparel"; and consequently, where the schedule of a voluntary bankrupt disclosed no assets except as appeared in the item "personal wearing apparel, $100," which he claimed as exempt, he is not guilty of making a false oath to such schedule, so as to bar his discharge, although it is shown that he owned a gold watch worth $50, which he habitually wore, and which he intended to include in the item mentioned.

—Sellers v. Bell, 94 Fed. 801.....36 C. C. A. 502

Where a husband, being at the time in business and enjoying good credit, advanced to his wife a sum of money to enable her to complete a purchase of realty for her own benefit, but took no note for the amount, and made no entry or memorandum of the loan, and never asked for repayment, and, being subsequently adjudged bankrupt, testified that his wife owed him the money, but that he did not exact it of her, *held*, that his omission to include this claim in his schedule of property would not bar his right to a discharge in bankruptcy, especially as the money, if repaid, would be claimable by the bankrupt as part of his statutory exemption, except as against a single creditor holding a note with waiver of exemption.

—Sellers v. Bell, 94 Fed. 801.....36 C. C. A. 502

BATTERY.

See "Assault and Battery."

BANKS AND BANKING.

§ 1. Banking corporations and associations.

In an action by a bank to recover the proceeds of drafts wrongfully drawn by its president and used for his personal benefit, the defense that

Digitized by Google

he was permitted to draw them through the culpable negligence of the directors is unavailing, where there was no finding of such negligence, or that defendants were influenced thereby to accept the drafts, of which they had notice the president was making improper use.
—Lamson v. Beard, 94 Fed. 30; C. B. Congdon & Co. v. Same, Id.; Phelps v. Same, Id.....36 C. C. A. 56

Possession of books by a bank, containing entries of drafts fraudulently drawn by the president in personal brokerage transactions, is not notice thereof to the bank, where the books were under the sole control of the president, and kept in such a manner as to conceal his defalcations.
—Lamson v. Beard, 94 Fed. 30; C. B. Congdon & Co. v. Same, Id.; Phelps v. Same, Id.....36 C. C. A. 56

Where a transaction between the president of a bank and defendants, in which the president paid defendants money belonging to the bank, which he wrongfully appropriated, was concealed from the bank, and the mere statement of the facts to the directors would have disclosed the fraud, defendants are liable to the bank for the money so received.
—Lamson v. Beard, 94 Fed. 30; C. B. Congdon & Co. v. Same, Id.; Phelps v. Same, Id.....36 C. C. A. 56

In an action by a bank to recover money fraudulently paid out by its president by means of drafts, a finding that the president was not a depositor, and that such wrongful appropriation constituted embezzlement, was not nullified by the fact that it was also found that the entries on the bank's books tended to show that the bank was paid for the drafts so drawn.
—Lamson v. Beard, 94 Fed. 30; C. B. Congdon & Co. v. Same, Id.; Phelps v. Same, Id.....36 C. C. A. 56

Subscribers to the capital stock of a national bank previously organized and carrying on business, who accepted certificates of stock representing a portion of the original capital stock, obtained by the bank in some manner from the former holders, are estopped, after the lapse of five years, during which they retained the stock, received two dividends, and paid one assessment thereon, to deny that they are stockholders, in a suit by the receiver to collect a further assessment, on the bank's insolvency, on the ground that they supposed they were purchasing a part of an issue of increased stock which the bank had voted to issue, but the issuance of which had not then been authorized by the comptroller.
Rand v. Columbia Nat. Bank, 94 Fed. 349; Same v. Tillinghast, Id. .....36 C. C. A. 292

When the directors and officers of a bank have misappropriated its funds, they are liable for interest on the amount from the date of the misappropriation, as damages; and no statute is necessary to authorize the allowance of such interest by a court of equity.
—Cooper v. Hill, 94 Fed. 582.....36 C. C. A. 402

No interest is recoverable against the fund in the hands of the receiver of an insolvent national bank on recovery in a suit to establish a claim against the bank, made necessary solely by the disallowance of the claim by the receiver. The receiver is required to exercise his judgment as to the allowance of claims, and other creditors are not chargeable with interest because of an error on his part.
—Merchants' Nat. Bank v. School Dist. No. 8, of Meagher County, Mont., 94 Fed. 705.....36 C. C. A. 432

§ 2. **Functions and dealings.**

A finding that money of a bank, appropriated by the president to his personal use by means of drafts, was wrongfully taken by him, is equivalent to a finding that he had no authority to draw and use the drafts.
—Lamson v. Beard, 94 Fed. 30; C. B. Congdon & Co. v. Same, Id.; Phelps v. Same, Id.....36 C. C. A. 56

Where the president of a bank wrongfully appropriated the bank's funds to his personal use by means of drafts, which he so entered on the bank's

Digitized by Google

books as to conceal their fraudulent character, the bank is not estopped by the president's course of dealing from denying his authority to draw drafts for such purpose.

—Lamson v. Beard, 94 Fed. 30; C. B. Congdon & Co. v. Same. Id.: Phelps v. Same, Id.....36 C. C. A. 56

In the absence of special authority, conferred by the directors of a bank by resolution, acquiescence, or implied assent, the president of a bank has no authority to draw drafts on its funds in payment of personal debts.

—Lamson v. Beard, 94 Fed. 30; C. B. Congdon & Co. v. Same, Id.: Phelps v. Same, Id.....36 C. C. A. 56

If the directors of a bank, trusting the president's integrity or individual responsibility, authorized him to use drafts drawn on its funds for private purposes, whether paid for at the time or not, any loss resulting from the misuse of such authority would fall on the bank, and not on a third person, who had taken the drafts for value and in good faith, which in such case would be determined by the established rules governing the transfer of negotiable paper.

—Lamson v. Beard, 94 Fed. 30; C. B. Congdon & Co. v. Same. Id.: Phelps v. Same, Id.....36 C. C. A. 56

Knowledge by the president of a bank of his misappropriation of its funds in personal transactions is not notice to the bank.

—Lamson v. Beard, 94 Fed. 30; C. B. Congdon & Co. v. Same. Id.: Phelps v. Same, Id.....36 C. C. A. 56

In response to letters soliciting an account and making an offer of services for the care of business in its neighborhood, a bank wrote, "If we understand your proposition, you agree that you will take from us all items on [neighboring states], crediting our account with the total of our letter on receipt at par, and remitting New York at par the year round on our balance in excess of $10,000." The correspondent was directed to advise of collections by the collection number of the remitting bank, so that they could be checked without difficulty. Each letter of advice contained the passage: "I inclose for collection and ..... Please advise collection by number, and return immediately if not honored." The list of items frequently directed protests, which directions were followed, and immediately on such protest the amount of such item and protest fees were charged back to remitting bank. Some items were charged with the note "Held," probably meaning held for future direction. Of many of the items the remitting bank was the mere mandatary for collection. *Held*, that the contract was one for collection of the items forwarded, and not of purchase, and the forwarding bank was entitled to all items not collected before suspension of the collecting bank, and afterwards collected by subagents, and traced to the possession of the receiver appointed to wind it up.

—Richardson v. Louisville Banking Co., 94 Fed. 442..36 C. C. A. 307

An agreement between two banks, by which one agrees to "handle" the items of exchange and commercial paper of the other within a certain territory, crediting the amount of such items to the account of the other on receipt, and under which the sending bank transmits such items as collections, indorsed payable to "any national or state bank," with directions to protest and return if unpaid, is an agreement for the making of collections only, and not of purchase and sale of the paper, and does not create the relation of debtor and creditor between the two banks as to items received and credited, but uncollected, at the time of the failure of the receiving bank; and any such items, or their proceeds, which can be identified as having come into the hands of its receiver, may be recovered by the sending bank.

—Richardson v. Continental Nat. Bank, 94 Fed. 450..36 C. C. A. 315

Neither a bank nor its receiver can deny the receipt of money deposited with the bank as a trust fund on the ground that no money was actually deposited, where it received and accepted credit for the amount with a correspondent, and received the money thereon in due course of business.

—Merchants' Nat. Bank v. School Dist. No. 8, of Meagher County, Mont., 94 Fed. 705.....36 C. C. A. 432

Digitized by Google

A national bank received funds of a school district which it had no right to receive as an ordinary deposit, or to mingle with its own funds, and which it undertook to hold for the special purpose of paying certain bonds of the school district, and no other. It did in fact mingle the funds with its own, and became insolvent, none of the bonds having been presented for payment. It had on hand, at the time it suspended business, cash in excess of the amount of such deposit, which came into the hands of its receiver. *Held*, that such deposit constituted a trust fund, which was recoverable by the school district from the receiver; the presumption being that so much of the cash on hand as equaled the deposit was the money of the school district.

—Merchants' Nat. Bank v. School Dist. No. 8, of Meagher County, Mont., 94 Fed. 705.....36 C. C. A. 432

§ 3. National banks.

An indictment against a sole defendant, charging that, as cashier of a national banking association, he caused and procured the making of false entries in the books of the bank, by certain clerks under his control as such cashier, with intent to defraud, sufficiently charges him with the offense as principal; the making of such entries by his direction being the same, in legal effect, as his making them in person.

—Peters v. United States, 94 Fed. 127.....36 C. C. A. 105

A finding as to the intent with which false entries were made in the books of a national bank by an officer of the bank may be based on legitimate inferences from the facts shown, and where, on the trial of a defendant for making such entries with intent to deceive the bank examiner, it is found that the entries were false; that they were made, or caused to be made, by defendant; and that their necessary effect was to deceive the bank examiner,—it may be inferred that they were made with such intent.

—Peters v. United States, 94 Fed. 127.....36 C. C. A. 105

In a prosecution of an officer of a national bank for making false entries in its books with intent to deceive the bank examiner, where there was testimony as to certain deposits made which were marked "special," and that the identical money was a few days later returned to the depositors, an instruction was correct which charged the jury that, if they found beyond a reasonable doubt that the understanding between such depositors and the defendant was that the money was only to be used by the bank for the purpose of being shown to the examiner as a part of the funds of the bank, then the entry of such sums as deposits was a false entry.

—Peters v. United States, 94 Fed. 127.....36 C. C. A. 105

Where it is not shown that a certain collection made by a receiver of an insolvent national bank was forwarded by a correspondent of the bank, nor included in the list of items sent, it is not sufficiently traced; and this though the receiver testified that the item was collected for the forwarding bank.

—Richardson v. Louisville Banking Co., 94 Fed. 442..36 C. C. A. 307

A decree which commands the receiver of an insolvent national bank to pay over a large sum of money within 10 days, where, as a matter of fact, and in accordance with law, the funds are in the custody of the comptroller of the currency, unduly limits the time for satisfying the decree, and might result in the receiver being in contempt for not paying over moneys which are not within his control.

—Richardson v. Louisville Banking Co., 94 Fed. 442..36 C. C. A. 307

An order directing payment of interest by the receiver of a national bank from date of judicial demand is erroneous, as funds coming into the hands of a receiver are turned over to the comptroller, and could not earn interest, and any payment of interest would necessarily be taken from some other trust fund; and this particularly where the involved circumstances of the case made it impossible to pay over the amount without investigation and an accounting.

—Richardson v. Louisville Banking Co., 94 Fed. 442..36 C. C. A. 307

Digitized by Google

A suit by the receiver of an insolvent national bank against its officers and directors to compel restitution of funds unlawfully diverted by them is one to execute a trust, and involves an accounting as to trust funds, and hence is of equitable cognizance.

—Cooper v. Hill, 94 Fed. 582.....36 C. C. A. 402

A national bank, however, has no power to prosecute a mining business on property which it has acquired,—much less, to expend its funds in prospecting for mineral on such property; and directors who authorize such expenditure are personally liable therefor to the bank or its receiver.

—Cooper v. Hill, 94 Fed. 582.....36 C. C. A. 402

A national bank which has lawfully acquired the title to property in payment of a debt has implied authority to make reasonable repairs thereon for the purpose of putting it in salable condition, and its directors cannot be held personally liable for money so expended in good faith.

—Cooper v. Hill, 94 Fed. 582.....36 C. C. A. 402

The officers and directors of a national bank without authority of law used its funds in prospecting and attempting to develop mining property which had been acquired by the bank. Their action was not fraudulent, but was taken in good faith for the benefit of the bank, but resulted in the loss of the funds so diverted. They subsequently sold their interests in the bank, and retired from its management, leaving it solvent and prosperous. Under the new management it subsequently became insolvent, and its receiver brought a suit in equity against the former directors to recover the amount so diverted by them. Such suit was not brought until more than six years after the last of the expenditures in the mining venture had been made, which was the limit of time, under the statutes of the state, within which an action at law for the recovery of the money could be maintained; but subsequently, and within the six years, the defendants, as directors, had repaid to themselves from the funds of the bank certain advances made by them individually in aid of such venture. *Held*, that the court would follow the statute, and as to the amounts originally expended the suit was barred by laches, but was maintainable for the recovery of the amounts subsequently withdrawn without legal authority.

—Cooper v. Hill, 94 Fed. 582.....36 C. C. A. 402

When a loss has been caused to a national bank by the appropriation of its funds to a purpose unauthorized by law, or by culpable negligence or conversion of its funds, the officers who participated in or consented to the act are jointly and severally liable for the entire amount.

—Cooper v. Hill, 94 Fed. 582.....36 C. C. A. 402

A bill by the receiver of a national bank against its officers and directors for the unlawful diversion of funds of the bank is sufficient to support a recovery, when the diversion is proved, although a further allegation that such diversion was fraudulent is not proved. The gravamen of the bill is the fact of unlawful diversion.

—Cooper v. Hill, 94 Fed. 582.....36 C. C. A. 402

A national bank advised plaintiff that it would pay all checks of a third person, although such person had no funds on deposit, as was known to both plaintiff and the bank. In reliance on such promise, plaintiff cashed checks of such person, and transmitted them to the bank for payment. The bank issued and sent to plaintiff its drafts on a correspondent for the amount of the checks, which drafts were refused payment. *Held*, that the contract was one purely of guaranty, and was ultra vires on the part of the bank, and the transaction gave plaintiff no right of action against it on the drafts.

—Bowen v. Needles Nat. Bank, 94 Fed. 925.....36 C. C. A. 553

A national bank has no power to lend its credit to any person or corporation, or to become guarantor of the obligations of another, except in the case of the transfer of promissory notes discounted, which is in the ordinary course of banking.

—Bowen v. Needles Nat. Bank, 94 Fed. 925.....36 C. C. A. 553

Digitized by Google

A pledgee of stock of a national bank, who sells it in accordance with the terms of the pledge, and becomes the purchaser, but never has it transferred on the books of the bank, is not liable for an assessment made under Rev. St. § 5151, on the bank's insolvency.
—Robinson v. Southern Nat. Bank, 94 Fed. 964....36 C. C. A. 584

BILLS AND NOTES.

Power of corporation to issue promissory notes, see "Corporations," § 4.

§ 1. Requisites and validity.
Where the president of a bank, as such, drew drafts on its funds, in favor of certain brokers as payees, for margins on brokerage transactions, such drafts are neither commercial paper, nor contracts, until accepted by the payees; and by acceptance the payees become parties to their original execution, and hence are put on inquiry whether the president exceeded his authority in drawing them, and, if so, such payees are liable to the bank for their proceeds.
—Lamson v. Beard, 94 Fed. 30; C. B. Congdon & Co. v. Same, Id.; Phelps v. Same, Id.....36 C. C. A. 56

§ 2. Rights and liabilities on indorsement or transfer.
A creditor, receiving a bank draft drawn to his order from his debtor in payment of the debt, is entitled to accept the draft without inquiry, not because of a presumption that the debtor had paid for the draft, but because it was drawn by the authorized officer of the bank in the usual course of business, acting without apparent or known interest in the transaction.
—Lamson v. Beard, 94 Fed. 30; C. B. Congdon & Co. v. Same, Id.; Phelps v. Same, Id.....36 C. C. A. 56

The receiver of such draft, though apparently an original party, as against the drawer is in effect an indorsee, and hence is only affected by equities of which he had notice before accepting it.
—Lamson v. Beard, 94 Fed. 30; C. B. Congdon & Co. v. Same, Id.; Phelps v. Same, Id.....36 C. C. A. 56

Where the president of a bank, as such, drew drafts on the bank's funds on deposit with its correspondents, payable to the order of certain brokers, for margins on transactions in futures carried for him personally, such payees are not bona fide holders of such drafts, but are put on inquiry as to the president's authority to draw the same on the bank's funds for his personal use, which inquiry they should have made from the directors of the bank; but they were under no obligation to undertake an examination of the bank's books to ascertain whether the president had reimbursed the bank.
—Lamson v. Beard, 94 Fed. 30; C. B. Congdon & Co. v. Same, Id.; Phelps v. Same, Id.....36 C. C. A. 56

BONDS.

Municipal bonds, see "Municipal Corporations," § 3.
Railroad bonds, see "Railroads," § 3.

BREACH.

Of condition, see "Insurance," § 4.
Of covenant, see "Insurance," § 4.

BROKERS.

Insurance brokers, see "Insurance," § 1.

Digitized by Google

BUILDING AND LOAN ASSOCIATIONS.

Under the statutes of New York, the taking of premiums for loans made by building and loan associations does not render them usurious, under the general usury statutes.
—Andruss v. People's Building, Loan & Saving Ass'n, 94 Fed. 575.... 36 C. C. A. 336

A borrowing stockholder in a building and loan association, whose stock has been forfeited by the association, in accordance with its rules, for default in payment of dues, is not entitled to credit on his loan for the amount paid thereon.
—Andruss v. People's Building, Loan & Saving Ass'n, 94 Fed. 575.... 36 C. C. A. 336

Where the by-laws of a building and loan association provide that all payments shall be made to its secretary at the office of the association in the state in which it is incorporated, and a bond and mortgage executed to the association by a borrowing stockholder each contain a stipulation that it is to be governed by the laws of such state, the contract will not be held usurious, if not so by the laws of such state where it is to be performed.
—Andruss v. People's Building, Loan & Saving Ass'n, 94 Fed. 575.... 36 C. C. A. 336

CARRIERS.

Carriage of goods by vessels, see "Shipping," § 2.
—— of passengers by vessels, see "Shipping," § 3.

CAUSE OF ACTION.

See "Malicious Prosecution," § 2.

CHANCERY.

See "Equity."

CHARGE.

To jury in civil actions, see "Trial," § 3.
—— in criminal prosecutions, see "Criminal Law," § 4.

CHATTEL MORTGAGES.

§ 1. Rights and liabilities of parties.
The fact that a mortgagor of personal property has given subsequent mortgages on the same property, which are unsatisfied, is a defense pro tanto to an action brought by him against the first mortgagee for conversion of the mortgaged property.
—Kohn v. Dravis, 94 Fed. 288.....36 C. C. A. 253

Under Code Iowa 1897, § 3466, which provides that, when a determination of the controversy between the parties before the court cannot be made without the presence of other parties, the court must order them to be brought in, a mortgagee of personal property, sued by the mortgagor for its conversion, has the right to have subsequent mortgagees brought in.
—Kohn v. Dravis, 94 Fed. 288.....36 C. C. A. 253

Where a mortgage on a stock of goods authorized the mortgagee to sell at retail, at not less than cost price, until a sufficient amount was realized

Digitized by Google

to pay the mortgage debt and costs of sale, but the mortgagee, after selling a portion of the goods at retail as provided, sold the remainder at auction, the mortgagor may, at his election, adopt as the basis for the assessment of his damages the market value of the goods which would have remained after satisfaction of the mortgage debt, had the mortgagee proceeded with the sale at retail, or the market value of all the goods not sold at retail, less the amount remaining due on the mortgage debt after the application thereon of the net proceeds of the portion so sold.
—Kohn v. Dravis, 94 Fed. 288.....36 C. C. A. 253

The measure of a mortgagor's damages for conversion of the mortgaged property by the mortgagee, or its sale in violation of the terms of the mortgage, is the market value, at the time of such conversion or sale, of the portion that would have remained, after sufficient had been sold in the manner provided by the mortgage, to satisfy the mortgage debt and costs.
—Kohn v. Dravis, 94 Fed. 288.....36 C. C. A. 253

In an action for conversion, by a mortgagor of a stock of goods against the mortgagee, where it appeared that defendant sold a part of the stock in the manner authorized by the mortgage, he is entitled to allowance for the costs of such sale, notwithstanding an unauthorized sale of the remainder.
—Kohn v. Dravis, 94 Fed. 288.....36 C. C. A. 253

§ 2. Foreclosure.
A mortgagee who avails himself of the power of sale contained in the mortgage must strictly pursue its terms, and, when sufficient of the property has been thus sold to satisfy the debt secured and costs, there is an implied agreement that the remainder unsold shall be returned to the mortgagor.
—Kohn v. Dravis, 94 Fed. 288.....36 C. C. A. 253

CHILD.

See "Adoption."

CITIES.

See "Municipal Corporations."

CLAIMS.

Against United States, see "United States," § 2.

COMMUNITY PROPERTY.

See "Husband and Wife," § 1.

COMPENSATION.

For property taken for public use, see "Eminent Domain," § 1.
Of attorney, see "Attorney and Client," § 1.
Of corporate officers, see "Corporations," § 3.
Salvage, see "Salvage," § 1.

COMPLAINT.

In criminal prosecution, see "Indictment and Information."

COMPROMISE AND SETTLEMENT.

See "Accord and Satisfaction."

Digitized by Google

CONDEMNATION.

Taking property for public use, see "Eminent Domain."

CONDITIONS.

In insurance policies, see "Insurance," § 4.

CONSOLIDATION.

Of actions, see "Action," § 1.

CONTRACTS.

Assignment of debt on Sunday, see "Sunday."
By corporation, see "Corporations," § 4.
By United States, see "United States," § 1.
Discharge of contract, see "Accord and Satisfaction."
Of adoption, see "Adoption."
Parol or extrinsic evidence, see "Evidence," § 5.
Particular classes of express contracts, see "Bailment"; "Bills and Notes"; "Indemnity"; "Insurance"; "Partnership"; "Vendor and Purchaser."
—— affreightment, see "Shipping," § 2.
—— employment, see "Master and Servant."

§ 1. **Construction and operation.**
Evidence of a practical construction placed on a written contract by the parties is not admissible to affect its construction by a court in an action thereon, where its terms are plain and unambiguous.
—Russell v. Young, 94 Fed. 45.....36 C. C. A. 71

§ 2. **Performance or breach.**
A provision of a written contract for the repair of a vessel, that no extra work should be done unless an estimate in writing was first made and submitted to and signed by an officer of the company owning the vessel, may be waived; and where, after the vessel was stripped to begin the work, it was found to be impossible to make the repairs specified in the contract without to a large extent rebuilding the hull, and after consultation with the officers of the company the contractor was told by the president to go on with the work, which he did, and under the direction of a superintendent employed by the company, and with the knowledge of its officers and directors, replaced all the rotten parts of the hull, and made the vessel sound and seaworthy, the company, having accepted the vessel, must be considered as having waived the written contract, and cannot invoke its provisions to defeat recovery for all work done not specified therein.
—The Sappho, 94 Fed. 545.....36 C. C. A. 395

§ 3. **Actions for breach.**
Where letters introduced in evidence by a plaintiff in proof of the contract sued upon do not constitute in themselves a completed contract, but merely negotiations with a view to a contract, and they are supplemented by oral testimony, it is proper to submit to the jury the question whether the contract alleged was in fact completed.
—Harvard Pub. Co. v. Syndicate Pub. Co., 94 Fed. 754..36 C. C. A. 470

CONTRIBUTORY NEGLIGENCE.

See "Negligence," § 2.

Digitized by Google

CONVEYANCES.

See "Chattel Mortgages"; "Mortgages."
In fraud of creditors, see "Fraudulent Conveyances."

CORPORATIONS.

See "Building and Loan Associations"; "Municipal Corporations"; "Railroads," § 1.
Banks, see "Banks and Banking," § 1.
Liability for exemplary damages, see "Libel and Slander," § 3.

§ 1. Incorporation and organization.
A board of levee inspectors created by act of the legislature of Arkansas for a county, and given the powers usually incident to corporations, including the power to condemn land for levee purposes, employ engineers, attorneys, and other agents, make contracts for work, and take bonds from the contractors, and fix the rate of taxation for levee purposes within their district, constitutes a corporation, with power to sue and be sued, although not in express terms declared by the act to be a corporation.
—Board of Levee Inspectors of Chicot County v. Crittenden, 94 Fed. 613 .....36 C. C. A. 418

§ 2. Capital, stock, and dividends.
A holder of railroad stock, issued to him as full paid, in payment of an undisputed claim, takes it free of all trusts created in favor of the railroad company by previous contracts to which he was not a party.
—Angle v. Chicago, St. P., M. & O. Ry. Co., 94 Fed. 717..... 36 C. C. A. 438

§ 3. Officers and agents.
Where, after the organization of a corporation, it was agreed and understood at an informal meeting of all the stockholders that the officers should be paid a reasonable compensation for their services, and by a by-law the board of directors was given power to fix the compensation of officers, their subsequent action in voting the president a reasonable salary for past services was legal, and a note of the corporation executed to him therefor was not without consideration.
—National Loan & Investment Co. v. Rockland Co., 94 Fed. 335..... 36 C. C. A. 370

Officers of a corporation, who are also directors, and who, without any agreement, express or implied, with the corporation or its owners, or their representatives, have voluntarily rendered their services, can recover no back pay or compensation therefor; and it is beyond the powers of the board of directors, after such services are rendered, to pay for them out of the funds of the corporation, or to create a debt of the corporation on account of them; but such officers, who have rendered their services under an agreement, either express or implied, with the corporation, its owners or representatives, that they shall receive reasonable but indefinite compensation therefor, may recover as much as their services are worth, and it is not beyond the powers of the board of directors to fix and pay reasonable salaries to them after they have discharged the duties of their offices.
—National Loan & Investment Co. v. Rockland Co., 94 Fed. 335..... 36 C. C. A. 370

§ 4. Corporate powers and liabilities.
A declaration, in an action against a corporation for personal injuries, which alleges that defendant employed certain detectives to investigate an alleged robbery, and that in the course of such employment such detectives, with other persons procured by them, committed an assault on plaintiff for the purpose of compelling him to confess to the commission of the robbery, and inflicted the injuries sued for, states sufficient facts to connect the defendant with the injury, and to charge it with liability

Digitized by Google

therefor; the means employed by its agents in the investigation being left to their discretion, in the exercise of which they were within their authority. A ratification or repudiation of their acts by defendant after they were committed, and plaintiff's right of action had accrued, would be immaterial.

—Southern Exp. Co. v. Platten, 93 Fed. 936.....36 C. C. A. 46

Under the modern rule adopted by the courts, a corporation is liable at common law for torts committed by its servants or agents, precisely as a natural person would be.

—Southern Exp. Co. v. Platten, 93 Fed. 936.....36 C. C. A. 46

A private trading corporation has the implied power to issue promissory notes, and one who purchases notes executed in behalf of such a corporation, and signed by its officers, may rely on the presumption that such officers have discharged their duty, and have not exceeded their authority in executing them.

—National Loan & Investment Co. v. Rockland Co., 94 Fed. 335..... 36 C. C. A. 370

The fact that the owner of a vessel was a corporation, and took no formal action by its board of directors, would not prevent its being bound by the action of its officers waiving the terms of a written contract, and the acceptance of the benefit of the contractor's work without objection.

—The Sappho, 94 Fed. 545.....36 C. C. A. 395

A contract entered into by a corporation, which is ultra vires of its charter, cannot be ratified or become binding on the ground of estoppel, and the only ground on which the corporation can become liable to the payment of money on account of such a contract, which has been performed by the other party, is that it has received a benefit or advantage thereby which it cannot justly retain.

—Bowen v. Needles Nat. Bank, 94 Fed. 925.....36 C. C. A. 553

The doctrine of ultra vires has no application to notes and a mortgage executed by the president in the name of a corporation which has power to execute such instruments, and the corporation may be estopped, by its subsequent conduct in ratification of the action of the president, to allege his want of authority or any informality in their execution to defeat its liability thereon.

—G. V. B. Min. Co. v. First Nat. Bank, 95 Fed. 23..36 C. C. A. 633

Where a mortgage executed in the name of a corporation recites that the seal of the corporation is affixed, and following the signature of the president is the symbol "[L. S.]," such symbol will be regarded as having been adopted and used for the occasion as the seal of the corporation, and the mortgage will not be held invalid, if in all other respects properly executed.

—G. V. B. Min. Co. v. First Nat. Bank, 95 Fed. 23..36 C. C. A. 633

2 Laws N. Y. 1892, c. 688, requiring the written assent of two-thirds of the stockholders as a condition precedent to the execution of a mortgage by a corporation, as construed by the courts of the state, was intended for the protection of the stockholders against the improvident or collusive acts of the officers in incumbering the property of the corporation; hence the form of assent by the stockholders is immaterial, if the intention is clear, and a mortgage executed in behalf of a corporation by its president, with the written indorsement thereon of the assent of another stockholder, who, together with the president, at the time owned more than two-thirds of the stock, is valid under such statute.

—G. V. B. Min. Co. v. First Nat. Bank, 95 Fed. 23..36 C. C. A. 633

A corporation which receives the benefit of money borrowed by its president, for which he executed the notes of the corporation, secured by a mortgage on its property, and which, with full knowledge of the facts, procures successive renewals of such notes through a number of years, cannot thereafter, for the first time, deny their validity.

—G. V. B. Min. Co. v. First Nat. Bank, 95 Fed. 23..36 C. C. A. 633

Digitized by Google

Where the president of a corporation is permitted to exercise full power and authority in the conduct and management of its business, and deals with the property and affairs of the corporation in such a manner and for such a length of time as to justify others with whom he transacts business in believing that he had authority to do the acts in the manner he does, such third persons have a right to deal with him on the assumption that he has such authority, and the corporation, having knowledge of such acts, and of the manner in which the corporate business is transacted, cannot thereafter, to the injury and prejudice of such parties, deny his authority or disaffirm his acts.

—G. V. B. Min. Co. v. First Nat. Bank, 95 Fed. 23..36 C. C. A. 633

Where the business of a corporation has habitually been transacted in an irregular manner, without observing the formalities legally required to bind it, with the knowledge and acquiescence of its stockholders, and it has in such manner made contracts and incurred obligations, the strict rules of law, however well settled, limiting the mode of exercising the powers of corporations by their officers, are not applicable to such contracts, as against third parties who have dealt with the corporation in good faith, and with knowledge of its manner of doing business.

—G. V. B. Min. Co. v. First Nat. Bank, 95 Fed. 23..36 C. C. A. 633

COURTS.

Review of decisions, see "Appeal and Error."
Trial by court without jury, see "Trial," § 4.

§ 1. United States courts.

The courts of the United States do not resort to the common law as a source of criminal jurisdiction, but can only take cognizance of such crimes and offenses as are expressly designated by the laws of congress, and of which they are by such laws given jurisdiction.

—Peters v. United States, 94 Fed. 127.....36 C. C. A. 105

Where a federal court, by its receiver, has possession of all the property of a railroad company for the purpose of administering it as the property of an insolvent corporation in a suit brought by general creditors, such possession draws to that court, as auxiliary, all suits and proceedings with respect to the property, and it has jurisdiction of proceedings to foreclose a mortgage without regard to the citizenship of the parties, whether such proceedings are by cross bill or intervening petition in the pending suit, or by an original bill.

—Toledo, St. L. & K. C. R. Co. v. Continental Trust Co., 95 Fed. 497; Hamlin v. Same, Id.; Rose v. Same, Id.....36 C. C. A. 155

It is not the domicile of a corporation created by an act of congress which confers jurisdiction on the federal courts of suits to which it is a party, but the fact that it was so created, and that any suit by or against it arises under a law of the United States.

—Supreme Lodge, Knights of Pythias, v. England, 94 Fed. 369..... 36 C. C. A. 298

Where the sole grounds relied upon by a plaintiff in a suit in a federal court to entitle him to a recovery, as disclosed by his pleading and the opening statement of his counsel, were the invalidity, under the statutes of the state, of certain tax proceedings, and the identical proceedings had been adjudged valid by the supreme court of the state, though not in a suit between the same parties, so as to render the matter res judicata as between them, its decision was nevertheless binding on the federal court as a construction of the local statutes, and the direction of a verdict for defendant by the court, on the conclusion of the plaintiff's opening statement, was not error.

—Haley Live-Stock Co. v. Board of Com'rs of Routt County, 94 Fed. 297.....36 C. C. A. 350

Digitized by Google

Simple contract creditors cannot maintain a creditors' bill, though state practice permits it.
—Harrison v. Farmers' Loan & Trust Co. of New York, 94 Fed. 728 .....36 C. C. A. 443

Where an action in a federal court is based on several accounts, exhibited with the declaration, the amount of the accounts in the aggregate is the amount in dispute, and, when it exceeds $2,000, the court is not deprived of jurisdiction, though the defendant successfully attacks the validity of the transfer of one of the accounts to the plaintiff, reducing the amount remaining below the jurisdictional limit.
—Tennent-Stribling Shoe Co. v. Roper, 94 Fed. 739..36 C. C. A. 455

The federal courts in Missouri are not required to follow the statute of that state (Laws 1895, p. 168), which requires juries, in cases in which exemplary damages are allowed, to assess such damages separately.
—Times Pub. Co. v. Carlisle, 94 Fed. 762; Journal Co. v. Same, Id.; World Pub. Co. v. Same, Id.....36 C. C. A. 475

A federal court is not at liberty to accept as conclusive the construction of a contract by the supreme court of a state, where such construction in no manner depends on any state law, and is not pleaded as creating an estoppel between the parties; but is required to exercise its independent judgment, giving to the state decision, however, due weight as a precedent.
—Bancroft v. Hambly, 94 Fed. 975.....36 C. C. A. 595

§ 2. **Concurrent and conflicting jurisdiction, and comity.**
In general the administration of the estates of deceased persons is left to the local law, and a federal court will not interfere.
—Bedford Quarries Co. v. Thomlinson, 95 Fed. 208..36 C. C. A. 272

The pendency in a state court of a suit to foreclose a mortgage does not preclude a federal court from entertaining jurisdiction of an action at law by the mortgagee to recover damages for the conversion or destruction of the mortgaged property, which amounts to an abandonment by the plaintiff of any claim to the property itself.
—Hubinger v. Central Trust Co. of New York, 94 Fed. 788.....
36 C. C. A. 494

COVERTURE.

See "Husband and Wife."

CREDITORS.

See "Bankruptcy"; "Fraudulent Conveyances."

CREDITORS' SUIT.

Remedies in cases of fraudulent conveyances, see "Fraudulent Conveyances," § 1.

Simple-contract creditors cannot come into a court of equity to obtain a seizure of property of the debtor in satisfaction of their claims.
—Harrison v. Farmers' Loan & Trust Co. of New York, 94 Fed. 728 .....36 C. C. A. 443

CRIMINAL LAW.

Indictment, information, or complaint, see "Indictment and Information."

§ 1. **Former jeopardy.**
In a prosecution against an officer of a national banking association, under Rev. St. § 5209, for making false entries in the books of the association, and in reports to the comptroller, the indictment containing

Digitized by Google

a number of counts, some charging the making of entries with intent to injure and defraud the association, and others with intent to deceive the association, and, in case of reports, the comptroller, the jury, on the first trial, rendered a verdict, which was set aside and a new trial granted, in which they found the defendant "guilty, as charged in the indictment, in falsifying the returns to the comptroller of the currency, and also books of the * * * bank, and on the balance of the counts we do not agree." *Held*, that such verdict could not be construed as a special verdict, amounting to an acquittal.

—Peters v. United States, 94 Fed. 127.....36 C. C. A. 105

§ 2. **Arraignment and pleas, and nolle prosequi or discontinuance.**

Where a so-called "special plea of former acquittal" is made in the form of a motion to discharge the defendant and exonerate his bond, based on former proceedings in the same cause and court, so that no evidence thereon is required, and only a question of law is presented, it is not necessary that issue should be joined thereon, and it may properly be disposed of by the court, like any other motion.

—Peters v. United States, 94 Fed. 127.....36 C. C. A. 105

§ 3. **Evidence.**

For the purpose of showing the falsity of an entry in the books of a national bank purporting to show a special deposit by a county treasurer of $10,000 immediately prior to a report made to the comptroller, which was shown to have been withdrawn a few days later, the government introduced the treasurer as a witness, who testified that he did not remember whether or not he made the deposit, but, if he did so, it was from public funds in his hands as such treasurer. *Held*, that it was within the discretion of the court to permit the introduction of the treasurer's cashbook for the purpose of showing whether or not any entry of such deposit or withdrawal appeared therein, although the witness testified that, if he made the deposit, no record thereof would appear on the books of his office.

—Peters v. United States, 94 Fed. 127.....36 C. C. A. 105

§ 4. **Trial.**

A defendant who, after the overruling of a special plea of former acquittal, proceeds to trial without objection as to the manner in which the plea was disposed of, waives the right to raise the question on appeal.

—Peters v. United States, 94 Fed. 127.....36 C. C. A. 105

It is not essential that the record of a criminal trial should show the presence of the defendant at every step of the proceedings, but the presumption is that his presence, once noted, continues at least during that entire day.

—Peters v. United States, 94 Fed. 127.....36 C. C. A. 105

In determining whether a charge in a criminal case is misleading, it must be read and considered as an entirety.

—Peters v. United States, 94 Fed. 127.....36 C. C. A. 105

§ 5. **Punishment and prevention of crime.**

Where a verdict of guilty is rendered on a number of counts, a sentence which does not exceed that which may legally be imposed on any one count is supported by the indictment, if any count is good.

—Peters v. United States, 94 Fed. 127.....36 C. C. A. 105

CUSTOMS DUTIES.

§ 1. **Goods subject to duty, rate, and amount.**

Carbon sticks, 36 inches long, intended for ultimate use in electric lighting, but which require to be cut into suitable lengths, the ends of which must be pointed or ground, before they can be so used, are dutiable under paragraph 97 of the tariff act of 1897, as articles or wares composed wholly

Digitized by Google

of carbon, not specially provided for, and not under paragraph 98, as carbons for electric lighting.
—United States v. Reisinger, 94 Fed. 1002.....36 C. C. A. 626

DAMAGES.

Compensation for property taken for public use, see "Eminent Domain," § 1.
In action for assault and battery, see "Assault and Battery," § 1.
—— for libel, see "Libel and Slander," § 3.
—— for wrongful death, see "Death," § 1.
Measure of damages for breach of contract for adoption, see "Adoption."

§ 1. Inadequate and excessive damages.
Where both bones of the leg of a seaman were broken through negligence, and after the injury he was grossly neglected by the officers of the ship, and the injury was permanent and greatly damaged him in his earning capacity, damages of $2,000 were not excessive.
—Lafourche Packet Co. v. Henderson, 94 Fed. 871...36 C. C. A. 519

DEATH.

§ 1. Actions for causing death.
In an action for wrongful death the defendant is not entitled to prove in mitigation of damages that plaintiff has received insurance on the life of the deceased from a collateral source wholly independent of defendant.
—Clune v. Ristine, 94 Fed. 745.....36 C. C. A. 450

DECREE.

In equity, see "Equity," § 4.

DEEDS.

Of trust, see "Mortgages."
Parol or extrinsic evidence, see "Evidence," § 5.

DEFAMATION.

See "Libel and Slander."

DESCENT AND DISTRIBUTION.

Descent and distribution, see "Wills."

DISCHARGE.

From indebtedness, see "Bankruptcy," § 3.

DISCLAIMER.

Affecting claim of patent, see "Patents," § 2.

DISCRETION OF COURT.

Review on appeal, see "Appeal and Error," § 10.

Digitized by Google

DISMISSAL AND NONSUIT.

Dismissal of appeal or writ of error, see "Appeal and Error," § 8.
Proceeding for condemnation, see "Eminent Domain," § 2.

§ 1. Involuntary.

Dismissal of cause for want of prosecution is within the discretion of the court, even in the absence of a rule permitting it.
—Colorado Eastern Ry. Co. v. Union Pac. Ry. Co., 94 Fed. 312..... 36 C. C. A. 263

Where nearly six years had elapsed since the filing of the original petition without steps to bring cause to trial, during which time plaintiff had twice filed petitions praying that suit be not dismissed for want of prosecution, alleging the pendency of other suits involving the matter in dispute, and such suits were finally disposed of, and no further steps were taken in the cause until two years later, when defendant filed petition to dismiss for want of prosecution, the court did not abuse its discretion in granting the application.
—Colorado Eastern Ry. Co. v. Union Pac. Ry. Co., 94 Fed. 312..... 36 C. C. A. 263

When a simple contract creditor files a creditors' bill, the dismissal should be without prejudice.
—Harrison v. Farmers' Loan & Trust Co. of New York, 94 Fed. 728 .....36 C. C. A. 443

DOCUMENTS.

As evidence in civil actions, see "Evidence," § 4.

DUTIES.

Customs duties, see "Customs Duties."

EASEMENTS.

Public easements, see "Highways."

EMINENT DOMAIN.

§ 1. Compensation.

General benefits resulting to a landowner in common with others from a public improvement are not to be taken into consideration, as against the value of his property taken or destroyed in making such improvement.
—Board of Levee Inspectors of Chicot County v. Crittenden, 94 Fed. 613 .....36 C. C. A. 418

§ 2. Proceedings to take property and assess compensation.

A proceeding for condemnation of right of way is a suit, so as to authorize the court to dismiss it for want of prosecution.
—Colorado Eastern Ry. Co. v. Union Pac. Ry. Co., 94 Fed. 312..... 36 C. C. A. 263

EMPLOYES.

See "Master and Servant."

Digitized by Google

EQUITY.

Consolidation of suits, see "Action," § 1.
Equitable estoppel, see "Estoppel," § 1.
Particular subjects of equitable jurisdiction, see "Trusts."
Proceedings by creditors, see "Creditors' Suit"; "Fraudulent Conveyances."
Relief against judgment, see "Judgment," § 1.
Suits for infringement of patents, see "Patents," § 3.

§ 1. Jurisdiction, principles, and maxims.

A bill by the assignee of a contract with the government, who had completed the work thereunder, against the assignor, who was insolvent, and owed the assignee on account of the contract more than was due from the government, and who had filed objections with the government against payment to the assignee, to enjoin the assignor from collecting or receiving the money due for the work, and to settle, as between the parties, which had the better right to the fund, is within the cognizance of equity.

—Dulaney v. Scudder, 94 Fed. 6.....36 C. C. A. 52

Ordinarily a bill in equity will not lie to compel personal representatives to satisfy a debt of their decedent, since the remedy at law is adequate.

—Bedford Quarries Co. v. Thomlinson, 95 Fed. 208..36 C. C. A. 272

Equity has jurisdiction of a bill by a receiver of a national bank to set aside a transfer of notes made by the bank to prefer a creditor.

—Alabama Iron & Railway Co. v. Austin, 94 Fed. 897..... 36 C. C. A. 536

§ 2. Laches and stale demands.

One claiming an interest in mining property that is subject to great and sudden fluctuations in value, or the value of which is uncertain, cannot remain silent and inactive, awaiting developments, while those in possession are expending money in its development, and a court of equity will deny him relief, where he has failed to bring suit within a comparatively short period.

—Curtis v. Lakin, 94 Fed. 251.....36 C. C. A. 222

Partners instituting suit to compel a co-partner to account for the proceeds of partnership property transferred to a corporation in exchange for stock, and to compel the corporation to transfer to them the stock, where it does not appear that the corporation had notice of their claim, and the stock may have passed into the hands of innocent purchasers, must proceed with reasonable diligence, and, where they have waited a year before commencing suit, relief will be denied.

—Curtis v. Lakin, 94 Fed. 251.....36 C. C. A. 222

The plaintiffs and the defendant L. entered into a partnership for the purpose of locating, developing, and operating mines. While prospecting under the agreement, L. located two mining claims in his own name, contrary to the agreement; and on July 27, 1894, conveyed a part interest to third persons; and on March 6, 1896, the entire interest in the claims was transferred to the defendant corporation, organized for that purpose, in exchange for stock. The complainants were first advised of the sale of part interest in the claims in 1895, but never communicated with L., for the purpose of obtaining an accounting or ascertaining his intentions. On November 13, 1897, about one year after plaintiffs were informed of the conveyance to the corporation, and two years after the first conveyance, and after the claims had increased in value to an amount exceeding $200,000, and expenditures had been made in developing them, they filed a bill against L. and the corporation, asking for a dissolution of the partnership and an accounting, and that the defendant corporation be decreed a trustee for the benefit of plaintiffs. *Held*, that the plaintiffs had been guilty of laches barring the suit.

—Curtis v. Lakin, 94 Fed. 251.....36 C. C. A. 222

Digitized by Google

The delay of plaintiffs in commencing suit against their co-partner for dissolution and an accounting, and to declare a third person purchasing partnership property from him a trustee, is not excused by the fact that the partnership agreement had been misplaced, and was not found until shortly before the suit was commenced.
—Curtis v. Lakin, 94 Fed. 251.....36 C. C. A. 222

§ 3. **Taking and filing proofs.**
Testimony can only be taken orally before the court on the hearing of an equity cause "upon due notice given, as prescribed by previous order," in accordance with equity rule 67. It cannot be so taken on an ex parte order.
—Mears v. Lockhart, 94 Fed. 274.....36 C. C. A. 239

§ 4. **Decree, and enforcement thereof.**
The court having taken jurisdiction of a suit by the assignee of a contract with the United States against the assignor to enjoin the assignor from collecting or receiving the money due under it, properly ascertains the amount due complainant from defendant, and renders a personal decree against him for that sum.
—Dulaney v. Scudder, 94 Fed. 6.....36 C. C. A. 52

ESTABLISHMENT.

Of highways, see "Highways," § 1.

ESTOPPEL.

By judgment, see "Judgment," § 2.
Of corporation, see "Corporations," § 4.
To avoid or forfeit insurance policy, see "Insurance," § 5.

§ 1. **Equitable estoppel.**
A shipper is not estopped to deny the validity of a provision of a bill of lading on the ground of its unreasonableness, since he does not stand on an equal footing with the carrier in accepting the bill of lading.
—Pacific Coast S. S. Co. v. Bancroft-Whitney Co., 94 Fed. 180.....
36 C. C. A. 135

Creditors of a de facto corporation, who dealt with it as a corporation, are estopped to deny its corporate existence for the purpose of defeating a mortgage which it executed in such capacity.
—Toledo, St. L. & K. C. R. Co. v. Continental Trust Co., 95 Fed. 497; Hamlin v. Same, Id.; Rose v. Same, Id.....36 C. C. A. 155

Where, at the time of the sale of property situated on public land, it was understood between the parties, though not stated in the contract, that the purchaser claimed the right to collect and receive a sum due from the United States on account of the cancellation of an entry made of the land, on which the purchase money had been paid, and thereafter, at the request of the purchaser, the seller, with knowledge of the facts, executed a power of attorney to enable the purchaser to collect the money in its name, which he took steps to do, the seller was estopped to subsequently revoke such power of attorney and collect the money and retain it for its own use, which prevented the purchaser from itself afterwards collecting and retaining the money.
—Pacific Mill & Mining Co. v. Leete, 94 Fed. 968....36 C. C. A. 587

The acquiescence by a seller of property in a claim of the purchaser to a sum to be refunded by the government on account of the concellation of an entry of land on which the property was situated created an estoppel, which prevented the seller from itself collecting and retaining the money.
—Pacific Mill & Mining Co. v. Leete, 94 Fed. 968....36 C. C. A. 587

Digitized by Google

EVIDENCE.

See "Witnesses."
Admissibility of evidence under pleading, see "Pleading," § 1.
In action for malicious prosecution, see "Malicious Prosecution," § 3.
In criminal prosecutions, see "Criminal Law," § 3.
Reception at trial, see "Trial," § 1.

§ 1. **Judicial notice.**
A federal court sitting in one state will take judicial notice of the public statutes of another state.
—Andruss v. People's Building, Loan & Saving Ass'n, 94 Fed. 575.... 36 C. C. A. 336

§ 2. **Presumptions.**
When the circumstances in proof tend to fix a liability on a party who has it in his power to offer evidence of all the facts as they existed, and rebut the inferences which the circumstances in proof tend to establish, and he fails to offer such proof, the natural conclusion is that the proof, if produced, would support the inferences against him.
—Pacific Coast S. S. Co. v. Bancroft-Whitney Co., 94 Fed. 180..... 36 C. C. A. 135

§ 3. **Relevancy, materiality, and competency in general.**
Sale by auction in a great mart of commerce is a proper method of determining the value of goods damaged in the hands of a carrier.
—Pacific Coast S. S. Co. v. Bancroft-Whitney Co., 94 Fed. 180..... 36 C. C. A. 135

§ 4. **Documentary evidence.**
In an action in a federal court in which it was sought to collaterally impeach a prior judgment of a state court, the admission in evidence of the record of a second suit in the state court, commenced by the person against whom the former judgment was rendered, to relieve himself therefrom, for the sole purpose of showing due diligence on his part, is not reversible error.
—Cooper v. Newell, 94 Fed. 792.....36 C. C. A. 498

§ 5. **Parol or extrinsic evidence affecting writings.**
Provisions in an insurance policy that it shall be void in case of concurrent insurance or a mortgage on the property, unless the consent of the company thereto is shown by a written indorsement on the policy, do not prevent the insured from sustaining the validity of the policy by parol evidence showing that it was issued with knowledge of the existence of concurrent insurance or of a mortgage on the property.
—McElroy v. British America Assur. Co. of Toronto, Canada, 94 Fed. 990.....36 C. C. A. 615

§ 6. **Opinion evidence.**
An expert may be asked a question involving a point to be decided by the jury.
—Western Coal & Mining Co. v. Berberich, 94 Fed. 329..... 36 C. C. A. 364

EXAMINATION.

Of witnesses in general see "Witnesses," § 1.

EXCESSIVE DAMAGES.

See "Damages," § 1.

EXECUTORS AND ADMINISTRATORS.

See "Wills."

Digitized by Google

EXEMPTIONS.

See "Homestead."

EXPERT TESTIMONY.

In civil actions, see "Evidence," § 6.

FALSE IMPRISONMENT.

See "Malicious Prosecution."

FEDERAL COURTS.

See "Courts," § 1.

FEDERAL QUESTIONS.

Grounds for jurisdiction, see "Courts," § 1.

FINDINGS.

Review on appeal, see "Appeal and Error," § 10.

FORECLOSURE.

Of mortgage, see "Chattel Mortgages," § 2; "Mortgages," § 4; "Railroads," § 3.

FORMER JEOPARDY.

Bar to prosecution, see "Criminal Law," § 1.

FRAUDULENT CONVEYANCES.

§ 1. Remedies of creditors.
A bill by the receiver of a bank to set aside a preferential transfer of notes, in violation of Rev. St. § 5242, is not sustained by proof that the notes were put into the transferee's hands for payment by him, and that, instead of paying them, he wrongfully kept them.
—Alabama Iron & Railway Co. v. Austin, 94 Fed. 897..... 36 C. C. A. 536

GRANTS.

Of public lands, see "Public Lands."

GUARANTY.

See "Indemnity."

HIGHWAYS.

§ 1. Establishment, alteration, and discontinuance.
Laws N. Y. 1892, c. 493, providing for the extending of highways in one town into or through other towns in the same county, was not in violation of the state constitution because it conferred on certain courts of the

Digitized by Google

state the power to determine the necessity or expediency of such extensions, the highest court of the state having upheld the exercise of such powers by the courts in numerous analogous cases arising under the same constitution.
—Town of Greenburg v. International Trust Co., 94 Fed. 755..... 36 C. C. A. 471

HOMESTEAD.

§ 1. **Abandonment, waiver, or forfeiture.**
The execution and recording of a disclaimer of homestead rights by a husband and wife, in property not at the time occupied as a homestead, for the purpose of procuring a loan on such property, will be given effect as an abandonment in favor of the mortgagee.
—Andruss v. People's Building, Loan & Saving Ass'n, 94 Fed. 575.... 36 C. C. A. 336

HUSBAND AND WIFE.

§ 1. **Community property.**
There can be no recovery of specific property, as part of the community, in an action by a divorced wife against the estate of her former husband, where it does not appear that the property is in the possession of, or in any wise claimed by, defendant.
—Young v. Rapier, 94 Fed. 283.....36 C. C. A. 248

To entitle a divorced wife to a share in the increased value of her husband's separate property caused by the expenditure of community funds, the amount of such expenditure must be shown.
—Young v. Rapier, 94 Fed. 283.....36 C. C. A. 248

Where the only evidence that a divorced wife had accepted the community was that of a futile suit to have the divorce annulled, and a suit to have her decreed the owner of an undivided one-half interest in property claimed to have been acquired during the community, commenced more than 20 years after the divorce, she will be presumed to have renounced the community, under Rev. Civ. Code La. art. 2420, providing that a divorced wife who has not accepted the community within the delays fixed is supposed to have renounced the same, unless she has within the term obtained a prolongation.
—Young v. Rapier, 94 Fed. 283.....36 C. C. A. 248

IMPEACHMENT.

Of witness, see "Witnesses," § 2.

IMPORTS.

Duties, see "Customs Duties."

INDEMNITY.

Under a bond for indemnity given on behalf of an employé appointed as agent for the sale of merchandise on commission, which by its terms declares that its true intent and meaning are that the surety "shall be responsible for moneys, securities, or property diverted from the employer through fraud or dishonesty on the part of the employé," proof that on a settlement of accounts between them there was an indebtedness from the employé to the employer is not of itself sufficient to authorize a recovery by the employer against the surety, as such indebtedness may have been authorized by agreement between the employer and employé, or by their

Digitized by Google

course of dealing, and may have been incurred without any fraud or dishonesty on the part of the employé.
—Monongahela Coal Co. v. Fidelity & Deposit Co. of Maryland, 94 Fed. 732.....36 C. C. A. 444

INDICTMENT AND INFORMATION.

§ 1. Requisites and sufficiency of accusation.
The sufficiency of an indictment is to be tested by ascertaining whether it contains every element of the offense intended to be charged, and sufficiently apprises the defendant of what he must meet, and whether, in case other proceedings are taken against him for a similar offense, the record shows with accuracy to what extent he may plead a former acquittal or conviction.
—Peters v. United States, 94 Fed. 127.....36 C. C. A. 105

An averment in the second or a subsequent count of an indictment, drawn under Rev. St. § 5209, that said defendant, on a date given, "being then and there the cashier of said association as aforesaid," as such cashier, committed the acts charged, is sufficient to identify and incorporate in such count the averments of the first count that the defendant was, at the time referred to, the duly elected and acting cashier of a certain national banking association, and that such association was at the time existing and carrying on business under the laws of the United States.
—Peters v. United States, 94 Fed. 127.....36 C. C. A. 105

The designation in an indictment of the year in which the offense is laid by Arabic figures is sufficient, and no prefix is essential; the year of the Christian era being understood as meant in all public or judicial documents in this country, unless otherwise expressed.
—Peters v. United States, 94 Fed. 127.....36 C. C. A. 105

Where a statute fully, directly, and expressly, without any uncertainty or ambiguity, sets forth all the elements of an offense, an indictment is sufficient which charges the offense substantially in the language of the statute.
—Peters v. United States, 94 Fed. 127.....36 C. C. A. 105

INDORSEMENT.

Of bill of exchange or promissory note, see "Bills and Notes," § 2.

INFANTS.

See "Adoption."

INFORMATION.

Criminal accusation, see "Indictment and Information."

INFRINGEMENT.

Of patent, see "Patents," § 3.

IN PAIS.

Estoppel, see "Estoppel," § 1.

INSOLVENCY.

See "Bankruptcy."

Digitized by Google

INSURANCE.

§ 1. Insurance agents and brokers.

An insurance solicitor, who takes an application for insurance, which is approved and accepted by an insurance company, and on which it issues a policy, and delivers it to the solicitor, who delivers it to the insured, and collects the premium, is, by the ratification of his acts done in its behalf, made the agent of the company in the transaction, and his knowledge binds the company, notwithstanding a provision of the policy that no person, unless duly authorized in writing, shall be deemed its agent; the insured having no knowledge of the actual relations between the solicitor and the company.

—McElroy v. British America Assur. Co. of Toronto, Canada, 94 Fed. 990.....36 C. C. A. 615

§ 2. The contract in general.

A marine policy permitted a tug to navigate the waters of Long Island Sound and shores and "all inland and Atlantic Coast waters of the United States, and all waters adjacent, connecting, or tributary to any of the above waters." The policy also provided that any deviation beyond the limits named should not avoid the policy, but that no liability should exist during such deviations, and "upon the return of said vessel within the limits named herein" the policy should be and remain in full force and effect. The tug went without the waters described to Mexico, thence with a tow she started for New York, and when off Charleston Bay, standing in for a supply of coal, was wrecked on a shoal about 1½ miles from the nearest mainland. *Held*, that the place of loss was in the "Atlantic Coast waters of the United States," and was covered by the policy.

—St. Paul Fire & Marine Ins. Co. v. Knickerbocker Steam Towage Co., 93 Fed. 931.....36 C. C. A. 19

An insured has the right to rely on the presumption that the policy he receives is in accordance with his application, and his failure to read it will not relieve the insurer or its agent from the duty of so writing it.

—McElroy v. British America Assur. Co. of Toronto, Canada, 94 Fed. 990.....36 C. C. A. 615

The fact that an application for a policy of insurance against business losses by the insolvency of debtors was made out in the state where the applicant resided does not render the contract subject to the statutes of that state, where the application was forwarded to the company in another state, where the policy was issued, and, so far as appears, where a loss thereunder is payable. Such a policy is a commercial instrument, and governed by the general principles of commercial law, unless the statutes of the state where the contract was made control its construction.

—American Credit Indemnity Co. v. Carrollton Furniture Mfg. Co., 95 Fed. 111.....36 C. C. A. 671

A policy of insurance against business losses by reason of insolvency of debtors contained definitions of insolvency, among which was the return unsatisfied of an execution in favor of the insured. It also required the insured to give notice, within 10 days after learning of the insolvency of a debtor, on blanks furnished by the company, and in the manner prescribed by it. Such blanks contained no reference to insolvency, but required the insured to answer questions as to the "failure" of a debtor, date, nature, etc. *Held*, that the word "failure" was used in its commercial sense, and that confessions of judgments by a debtor who was in business, and a seizure of his stock by the sheriff, causing a suspension of his business, was a "failure" in a commercial sense, and that a report of such failure by the insured within 10 days, with the questions in the company's blanks fully answered, fulfilled the requirements as to notice, and a second notice after the return of an execution unsatisfied was not required.

—American Credit Indemnity Co. v. Carrollton Furniture Mfg. Co., 95 Fed. 111.....36 C. C. A. 671

Digitized by Google

§ 3. **Avoidance of policy for misrepresentation, fraud, or breach of warranty or condition.**

When there is a distinct agreement that an application for insurance is a part of the contract, and the statements in the application are expressly declared to be warranties, they are to be treated as such, and not merely as representations, and must be strictly true, or the policy will not take effect.

—American Credit Indemnity Co. v. Carrollton Furniture Mfg. Co., 95 Fed. 111.....36 C. C. A. 671

§ 4. **Forfeiture of policy for breach of promissory warranty, covenant, or condition subsequent.**

A policy of marine insurance provided that it should be void if other insurance was made on the vessel exceeding $50,000. The policy also provided that, in the event of a deviation from certain waters, the policy should be suspended, and take effect on return to such waters. The tug, desiring to go outside of the waters designated, applied to defendant company for permission and indorsement on the policy, which was refused. Thereafter it took out a policy in another insurance company, which, with the policies then existing, would have exceeded the prescribed limits. The latter policy provided that, if the assured had other insurance prior in date, the company should be liable only for so much as the amount of the prior insurance was deficient towards covering the property insured. This prior insurance was to the total value of the vessel. *Held* that, as such latter policy could take effect only on the suspension of the other policies, and was at once suspended upon the revival of the other policies on a return within the limits, there was at no time insurance in effect more than the agreed amount, and the policy sued on was not void for overinsurance.

—St. Paul Fire & Marine Ins. Co. v. Knickerbocker Steam Towage Co., 93 Fed. 931.....36 C. C. A. 19

A provision of an iron-safe clause in a policy of insurance on merchandise, which, in addition to requiring the insured to keep his books and inventory in a safe or other secure place at night, makes the policy void in the event that he shall fail to produce such books and inventory in case of loss, must be given a reasonable, and not a strictly literal, construction; and, so construed, in connection with the provision for the manner in which the books and inventory shall be kept to insure their safety, it requires the insured to produce them after the fire, if within his power to do so, and casts upon him the responsibility for their loss in all cases where such loss is due to a wrongful or fraudulent act on his part, or to his culpable negligence.

—Liverpool & London & Globe Ins. Co. v. Kearney, 94 Fed. 314.... 36 C. C. A. 265

By a clause in a policy of insurance on a stock of merchandise the insured agreed to keep the books containing a record of his business, together with his last inventory, "securely locked in a fireproof safe at night, * * * or in some secure place not exposed to a fire which would destroy the house where such business is carried on." *Held*, that such clause gave the insured an option to keep the books either in a safe or some other secure place, which option he might exercise at any time, and was not violated by the removal of the books in the night from the safe to a place of safety outside on the approach of a fire to the building, such removal being but an act of prudence; nor did the accidental loss of the inventory during such removal preclude a recovery on the policy.

—Liverpool & London & Globe Ins. Co. v. Kearney, 94 Fed. 314.... 36 C. C. A. 265

§ 5. **Estoppel, waiver, or agreements affecting right to avoid or forfeit policy.**

Where the agent of an insurance company, at the time he writes a policy, has knowledge of an incumbrance on the property, or that the insured has procured or arranged to procure concurrent insurance thereon, his knowledge binds the company, in the absence of fraud, and it is estopped

Digitized by Google

to claim the invalidity of the policy on such grounds, notwithstanding any provisions of the policy in that regard.
—McElroy v. British America Assur. Co. of Toronto, Canada, 94 Fed. 990.....36 C. C. A. 615

§ 6. **Notice and proof of loss.**
Mere silence, by failure to reply to a letter regarding a loss, is not a waiver of a positive requirement of the policy as to notice of the loss, when the policy expressly provides that it shall not be held a waiver, and that changes in the conditions of the policy must be in writing, signed by the president or secretary of the company.
—American Credit Indemnity Co. v. Carrollton Furniture Mfg. Co., 95 Fed. 111.....36 C. C. A. 671

§ 7. **Payment or discharge, contribution, and subrogation.**
An insurance company which has paid a loss upon partnership goods is not prevented, by the subsequent death of one of the partners and the resulting dissolution of the firm, from maintaining a suit in admiralty, in the partnership name, to recover the amount of the loss from the carrier.
—Pacific Coast S. S. Co. v. Bancroft-Whitney Co., 94 Fed. 180..... 36 C. C. A. 135

§ 8. **Actions on policies.**
Where a defendant in an action on a policy of life insurance pleads as a defense that the insured committed suicide, by reason of which the policy became void, the burden of establishing such defense rests upon the defendant throughout the trial. The fact that the plaintiff introduces in evidence the proofs of death furnished the defendant, containing the statement that the insured committed suicide and the verdict of a coroner's jury to that effect, while such evidence is entitled to its weight, and, standing alone, would establish the fact of suicide prima facie, does not shift the burden of proof on the issue, so as to require the plaintiff on the whole case to prove, by a preponderance of evidence, that death resulted from other causes.
—Supreme Lodge Knights of Pythias of the World v. Beck, 94 Fed. 751 .....36 C. C. A. 467

INTERLOCUTORY INJUNCTION.

Review on appeal, see "Appeal and Error," § 10.

INVENTION.

See "Patents."

JEOPARDY.

Former jeopardy bar to prosecution, see "Criminal Law," § 1.

JOINDER.

Of parties in civil actions, see "Parties," § 1.

JUDGES.

See "Courts."

JUDGMENT.

Decree in equity, see "Equity," § 4.
Review, see "Appeal and Error."

Digitized by Google

§ 1. Equitable relief.

A holder of bonds of a corporation, the value of which is impaired by a collusive decree, to which he was not a party, establishing other claims against the corporation as liens upon its property superior to the lien of its bonds, may maintain a suit to impeach such decree, as otherwise he would be without remedy.

—Richardson v. Loree, 94 Fed. 375.....36 C. C. A. 301

A suit in equity in a federal court to impeach a former decree of such court, to which the complainant in the bill was not a party, for fraud and collusion, while ancillary to the suit in which such decree was rendered for purposes of jurisdiction, so that it may be entertained without regard to the citizenship of the parties, is an original suit, in a chancery sense; and, in passing on a demurrer to the bill which states the facts, the court cannot look into the record of the former suit, except so far as it is made a part of the bill, nor can such record be brought before the court by any averments or recitals in the demurrer.

—Richardson v. Loree, 94 Fed. 375.....36 C. C. A. 301

§ 2. Conclusiveness of adjudication.

Where an indictment for stealing certain road orders from the office of the clerk of court was sustained on demurrer, and the accused tried thereunder and acquitted, in a subsequent action for malicious prosecution accused cannot claim that the prosecution was instituted without probable cause, because the road orders were not subjects of larceny, as the judgment of the criminal court was binding and valid on the questions necessarily involved in the maintenance of the indictment, to wit, that a criminal offense was charged.

—Staunton v. Goshorn, 94 Fed. 52.....36 C. C. A. 75

Where one not originally a party is permitted to file a petition in a suit in equity, and to set up new and different rights from any involved in the original bill, such petition (at least, as against a stranger to the suit, who during its pendency, and before the filing of the petition, has acquired possession of the property in litigation) must be treated as the commencement of a new suit; and such person must be brought in by process in accordance with the established practice, or he will not be concluded by a decree in favor of the petitioner.

—Hook v. Mercantile Trust Co. of New York, 95 Fed. 41.....
36 C. C. A. 645

§ 3. Pleading and evidence of judgment as estoppel or defense.

Where an order dismissing a law case is pleaded in bar in an equity suit, and no proof is offered except the order itself, defendant cannot show the nature of the law case by affidavit after trial.

—Alabama Iron & Railway Co. v. Austin, 94 Fed. 897.....
36 C. C. A. 536

JUDICIAL NOTICE.

In civil actions, see "Evidence," § 1.

JURISDICTION.

Amount in controversy, see "Courts," § 1.
In admiralty, see "Admiralty," § 1.
In equity, see "Equity," § 1.
Particular courts, see "Courts."
Probate jurisdiction of federal courts, see "Courts," § 2.

JURY.

Instructions in civil actions, see "Trial," § 3.
Taking case or question from jury at trial, see "Trial," § 2.

Digitized by Google

JUSTIFICATION.

Of actionable words, see "Libel and Slander," § 2.

LACHES.

Effect in equity, see "Equity," § 2.

LANDS.

See "Public Lands."

LETTERS PATENT.

For inventions, see "Patents."

LEVEES.

Whether or not there exists a servitude upon the lands bordering on the Mississippi river within all the original Louisiana territory which authorizes the taking of land for a public levee without compensation (a question not decided), it has never been the policy of the state of Arkansas to claim or exercise such right, and it cannot be asserted in a federal court by a board of levee inspectors created by the legislature of that state by an act which provides for the payment of compensation for lands so taken.
—Board of Levee Inspectors of Chicot County v. Crittenden, 94 Fed. 613 .....36 C. C. A. 418

A levee board, in taking earth and timber from land of an individual owner for the repair of a levee previously constructed, acts in its corporate capacity and within its powers, although there is no statutory provision for such taking; and the board is liable in such capacity, under the constitution of Arkansas, for just compensation to the landowner for so much of his property as was "taken, appropriated, or damaged."
—Board of Levee Inspectors of Chicot County v. Crittenden, 94 Fed. 613 .....36 C. C. A. 418

LIBEL AND SLANDER.

§ 1. Words and acts actionable, and liability therefor.

A good name is more estimable than tangible property, and as valuable, and the law gives corresponding redress for its injury.
—Times Pub. Co. v. Carlisle, 94 Fed. 762; Journal Co. v. Same, Id.; World Pub. Co. v. Same, Id.....36 C. C. A. 475

Every man is presumed to be innocent of crime until he is proved to be guilty; but there is a stronger presumption that a man of good reputation is not guilty of a criminal charge, and he who attacks the reputation of such a man cannot escape the effect of this presumption.
—Times Pub. Co. v. Carlisle, 94 Fed. 762; Journal Co. v. Same, Id.; World Pub. Co. v. Same, Id.....36 C. C. A. 475

§ 2. Justification and mitigation.

The fact that the information from which a libelous publication was made was derived from another, who made or repeated the charge it contained, and that the name of the informant was stated in the libel, is no justification for its publication.
—Times Pub. Co. v. Carlisle, 94 Fed. 762; Journal Co. v. Same, Id.; World Pub. Co. v. Same, Id.....36 C. C. A. 475

Digitized by Google

§ 3. **Actions.**
Under the Code matter in mitigation of damages for the publication of a libel must be pleaded before it can be proved.
—Times Pub. Co. v. Carlisle, 94 Fed. 762; Journal Co. v. Same, Id.; World Pub. Co. v. Same, Id.....36 C. C. A. 475

A violation of the rights and feelings of the victim of a libel, which is caused by a reckless disregard of them, is the legal equivalent of an intentional violation of them.
—Times Pub. Co. v. Carlisle, 94 Fed. 762; Journal Co. v. Same, Id.; World Pub. Co. v. Same, Id.....36 C. C. A. 475

Malice, in its legal sense,—that is to say, "an act done wrongfully, without legal justification or excuse,"—is conclusively implied from such a publication.
—Times Pub. Co. v. Carlisle, 94 Fed. 762; Journal Co. v. Same, Id.; World Pub. Co. v. Same, Id.....36 C. C. A. 475

Exemplary damages may be allowed by a jury, in an action of libel, when the publication has been made with a reckless disregard of the rights of the person libeled, although it was not inspired by ill will, spite, or intent to injure him.
—Times Pub. Co. v. Carlisle, 94 Fed. 762; Journal Co. v. Same, Id.; World Pub. Co. v. Same, Id.....36 C. C. A. 475

A corporation is liable for exemplary damages for acts done in the course of its business, by its agents, while acting within the scope of their authority and duty, to the same extent as an individual; and a corporation publishing a newspaper may be liable for such damages for circulating a libel therein.
—Times Pub. Co. v. Carlisle, 94 Fed. 762; Journal Co. v. Same, Id.; World Pub. Co. v. Same, Id.....36 C. C. A. 475

The unprivileged publication of matter that is false and libelous per se warrants the recovery of compensatory damages, without allegation or proof of malice in its ordinary acceptation; that is to say, ill will, bad motive, hatred, or intent to injure.
—Times Pub. Co. v. Carlisle, 94 Fed. 762; Journal Co. v. Same, Id.; World Pub. Co. v. Same, Id.....36 C. C. A. 475

Exemplary damages may be allowed by the jury, in an action of libel, when the publication was made with ill will, or a willful intent to injure the party libeled, and the matter published was false, libelous, and unprivileged.
—Times Pub. Co. v. Carlisle, 94 Fed. 762; Journal Co. v. Same, Id.; World Pub. Co. v. Same, Id.....36 C. C. A. 475

In an action of libel, it is ordinarily a question for the jury, in view of all the facts and circumstances of the case, whether or not exemplary damages should be allowed; and the amount of such damages is exclusively within their province.
—Times Pub. Co. v. Carlisle, 94 Fed. 762; Journal Co. v. Same, Id.; World Pub. Co. v. Same, Id.....36 C. C. A. 475

LIENS.

See "Maritime Liens."
Dissolution by adjudication in bankruptcy, see "Bankruptcy," § 2.
For taxes, see "Taxation," § 1.

LIMITATION OF ACTIONS.

Laches, see "Equity," § 2.

§ 1. **Statutes of limitation.**
A plea of the statute of limitations relates to the remedy, and is governed by the law of the forum.
—Underwood v. Patrick, 94 Fed. 468.....36 C. C. A. 330

Digitized by Google

§ 2. **Computation of period of limitation.**
Where a vendor sold land to a syndicate, taking notes of one member for deferred payments of purchase money, a right of action by the vendor against another member of the syndicate for the recovery of such purchase money, if any existed, accrued on the maturity of the notes.
—Underwood v. Patrick, 94 Fed. 468.....36 C. C. A. 330

The directors of a national bank are not trustees of an express trust, with respect to the property or funds of the bank, but of an implied or resulting trust created by the operation of the law upon their official relation to the bank; and the statute of limitations and the doctrine of laches may be invoked in their defense, when sued for a breach of such trust. Such an action is maintainable either at law or in equity, and a court of equity will follow the statute of limitations, unless unusual or extraordinary circumstances render its application inequitable in a particular case.
—Cooper v. Hill, 94 Fed. 582.....36 C. C. A. 402

A cause of action against the directors of a bank for fraudulently diverting its funds for their own benefit accrues as soon as the diversion is complete, in the absence of concealment of the facts on their part; and where such facts are shown upon the records of the bank, and become known to a cashier who succeeds the one involved in the transaction, and who has no interest in the matter adverse to the bank, his knowledge is notice to the bank.
—Cooper v. Hill, 94 Fed. 582.....36 C. C. A. 402

The running of the statute against an action on an appeal undertaking given on appeal to the general term of the superior court of the city of New York is not affected by the taking of a further appeal from the judgment of the general term to the court of appeals.
—Howard Ins. Co. of New York v. Silverberg, 94 Fed. 921.....
36 C. C. A. 549

§ 3. **Acknowledgment, new promise, and part payment.**
As an action against another of the purchasers, who did not sign the notes, would not be based thereon, but on a collateral promise, a payment on the notes after their maturity by the maker or a subsequent grantee would not extend the time within which such action could be brought.
—Underwood v. Patrick, 94 Fed. 468.....36 C. C. A. 330

LOAN COMPANIES.

See "Building and Loan Associations."

MALICIOUS PROSECUTION.

§ 1. **Nature and commencement of prosecution.**
One who both makes an arrest, and originates the proceeding in which it is made, may, though protected as to the arrest, be liable for malicious prosecution.
—Reisterer v. Lee Sum, 94 Fed. 343.....36 C. C. A. 285

§ 2. **Want of probable cause.**
On a trial for malicious prosecution, the defense that defendants acted under the advice of attorneys may be sustained, though the advice was taken after the arrest, but before the issuance of the warrant.
—Staunton v. Goshorn, 94 Fed. 52.....36 C. C. A. 75

The advice of reputable counsel, bona fide sought and given on full and fair statement of all the facts, and as a consequence of which a prosecution was instituted, is a sufficient defense in a suit for malicious prosecution.
—Staunton v. Goshorn, 94 Fed. 52.....36 C. C. A. 75

The evidence showed that certain public officials in charge of the public records of the court and the sheriff of the county were informed, by a

Digitized by Google

deputy clerk, that a former clerk was about to steal certain public records and destroy them, with an intent to prejudice such officials by showing payments made without proper vouchers, and that on a certain day he would carry his purpose into effect. On such day the former clerk was discovered by the officials removing such records from the clerk's office, and thereupon they procured his arrest. *Held* that, in an action by such clerk for malicious prosecution, the jury should have been instructed that there existed, so far as the public officials were concerned, probable cause for the institution of the criminal proceedings.
—Staunton v. Goshorn, 94 Fed. 52.....36 C. C. A. 75

In an action for malicious prosecution, defendants are not liable, no matter how vindictive they may have acted, nor what their motives may have been, if they acted with probable cause.
—Staunton v. Goshorn, 94 Fed. 52.....36 C. C. A. 75

Whether or not there was probable cause for the institution of a criminal proceeding, where the facts are undisputed, is a question of law for the court; otherwise, one of fact for the jury.
—Staunton v. Goshorn, 94 Fed. 52.....36 C. C. A. 75

A former clerk was arrested on a charge of stealing public records with intent to destroy them, but defended on the ground that his purpose was simply to examine the same in order to ascertain their validity. Certain public officials had been informed by a deputy clerk of the intent of such former clerk to steal the papers, and, on finding him in possession of the papers, caused his arrest. *Held*, in an action against such officials and the deputy clerk for malicious prosecution, it was error to instruct the jury that if the purpose of such former clerk in taking the papers was to examine them, and not to destroy them, and the person giving the information to the public officials had knowledge of such intent, that the arrest and prosecution of such clerk for taking the papers was without probable cause, in that it made no distinction between the public officials and the deputy clerk, as such public officials had no knowledge of the facts other than as communicated to them by said deputy clerk.
—Staunton v. Goshorn, 94 Fed. 52.....36 C. C. A. 75

Where defendant put in motion a criminal proceeding against plaintiff, a Chinaman, under the Chinese exclusion act, on the ground that he had not a certificate of residence as required thereby, thus subjecting him to imprisonment and compelling him to establish his innocence, the only incriminating circumstances at the time being want of resemblance between plaintiff and the indistinct photograph attached to the certificate in his possession, and the existence of scars on his face, while the certificate stated that the person named in it had no physical marks or peculiarities for identification, and the photographer testified that in his opinion the photograph was one of plaintiff, and that it might originally have shown the scars, and that they might have faded out, and defendant did not attempt to compare the photograph with the one which the act required to be filed in the office of the collector of internal revenue, and did not inquire when the scars were received, a finding of want of probable cause, from which malice may be inferred, is justified, though at a subsequent investigation, before trial before the commissioner, there was sufficient evidence of probable cause, in that plaintiff made contradictory statements as to his residence, when he obtained the certificate, and as to whether he had the scars before the photograph was taken, and he was found to be an inch taller than described in the certificate.
—Reisterer v. Lee Sum, 94 Fed. 343.....36 C. C. A. 285

§ 3. **Actions.**

On a trial of several defendants for malicious prosecution in procuring the trial of plaintiff for stealing public records, plaintiff could not prove statements made by him to third parties before the taking of the papers, as to what were his objects and purpose in procuring such papers, such evidence being hearsay.
—Staunton v. Goshorn, 94 Fed. 52.....36 C. C. A. 75

Digitized by Google

MARITIME LIENS.

§ 1. **Nature, grounds, and subject-matter in general.**

There is no lien on a vessel, either under the general maritime law or under the Code of Louisiana, for premiums due on insurance policies taken for the benefit of the owners, and from which lienholders would receive no benefit in case of loss.

—Learned v. Brown, 94 Fed. 876; Rumble v. Same, Id..... 36 C. C. A. 524

Where a vessel is owned by resident citizens of a state, and her headquarters are at a port therein, such place must be treated as her home port, and no lien is given by the general maritime law for supplies furnished at such port, which are presumed to have been furnished on the credit of the owners, and any liens asserted for such supplies must rest upon the laws of the state.

—Learned v. Brown, 94 Fed. 876; Rumble v. Same, Id..... 36 C. C. A. 524

The statute of Louisiana grants no lien for money advanced to the master or owners of a vessel in the home port, no matter for what purpose.

—Learned v. Brown, 94 Fed. 876; Rumble v. Same, Id..... 36 C. C. A. 524

The statute of Louisiana does not authorize a part owner of a vessel to assert a lien against it for wages due him, as against creditors of the vessel.

—Learned v. Brown, 94 Fed. 876; Rumble v. Same, Id..... 36 C. C. A. 524

§ 2. **Creation, operation, and effect.**

Under the Pennsylvania statutes, either Act June 13, 1836, as amended by Act June 24, 1895, or Act April 20, 1858, relating to liens for work done or materials furnished in the building or equipment of vessels, a delivery of an article made for the equipment of a steamer, either by placing it in the vessel or delivering it to the owners, is essential to create a lien on the vessel therefor.

—Hays v. James Rees & Sons Co., 93 Fed. 984.....36 C. C. A. 45

Under the statute of Louisiana relating to liens or privileges against vessels (Code 1870, art. 3237), as construed by the courts of the state, a vessel owned in the state, and trading in its waters, is not considered as making voyages, within the meaning of that article, and the privileges granted thereby may be asserted at any time within six months, without regard to the number of trips made by the vessel during that time.

—Learned v. Brown, 94 Fed. 876; Rumble v. Same, Id..... 36 C. C. A. 524

Parties who have united in a libel of intervention against a vessel do not waive their right to a lien by withdrawing such libel and filing separate libels.

—Learned v. Brown, 94 Fed. 876; Rumble v. Same, Id..... 36 C. C. A. 524

A release to a claimant under an appraisal and stipulation or bond, not made under the limited liability act, of a part of the res seized under a libel in admiralty has the same effect upon the liens upon the part released that a discharge of the entire res under a like appraisal and stipulation or bond would have had upon the liens upon the whole thing, which is to discharge the liens of those who were parties to the proceeding when the release was made, but no others.

—Hawgood & Avery Transit Co. v. Dingman, 94 Fed. 1011; Barry Towing & Wrecking Co. v. Inter-Ocean Coal & Coke Co., Id.... 36 C. C. A. 627

An intervener in a suit to enforce liens against a vessel, who claims ownership of a part of the property libeled, and obtains its release on ap-

Digitized by Google

praisal and bond, cannot, by subsequently setting up a claim to a lien in his own behalf, become entitled to share in the proceeds of the bond and the remaining property.

—Hawgood & Avery Transit Co. v. Dingman, 94 Fed. 1011; Barry Towing & Wrecking Co. v. Inter-Ocean Coal & Coke Co., Id.... 36 C. C. A. 627

§ 3. **Enforcement.**

In a suit to enforce a lien given by the general maritime law for damage to cargo, a limitation of one year contained in the Code of Civil Procedure of California (section 813), which gives a lien for injuries to goods shipped on board a vessel, does not apply, although the bill of lading was signed within that state before the goods were shipped, and the freight was to be delivered at a port therein.

—Pacific Coast S. S. Co. v. Bancroft-Whitney Co., 94 Fed. 180..... 36 C. C. A. 135

Respondents in a suit to enforce maritime liens are required to file cross libels, to take out process, and have it served in the usual way, if they have liens which they wish to enforce, and cannot obtain such relief by merely pleading their claims in their answers.

—Hawgood & Avery Transit Co. v. Dingman, 94 Fed. 1011; Barry Towing & Wrecking Co. v. Inter-Ocean Coal & Coke Co., Id.... 36 C. C. A. 627

MARRIED WOMEN.

See "Husband and Wife."

MASTER AND SERVANT.

§ 1. **Services and compensation.**

In an action on a contract of employment to recover salary for services rendered thereunder, in which the complaint alleges performance on the part of the employé, proof of such performance is essential, and the plaintiff cannot recover on evidence that the employé was prevented from performing the contract by defendant, it being shown that he did not in fact render any services thereunder.

—Bancroft v. Hambly, 94 Fed. 975.....36 C. C. A. 595

§ 2. **Master's liability for injuries to servant.**

Where the knowledge and the means of knowledge of the servant in respect to a patent defect are equal or superior to those of the master, the servant cannot recover for injuries resulting from such defect, where there is no question of the intricate character of the machinery or the imperfect intelligence of the servant involved.

—Detroit Crude-Oil Co. v. Grable, 94 Fed. 73.....36 C. C. A. 94

The rim of a fly wheel was fastened on by bolts that projected towards the engine from 1½ to 3 inches. Between the wheel and the engine block there was a water-pipe line connected with the engine pump. This line was only a half inch from the longest projecting bolt, and when the pump was in operation it vibrated. *Held*, that an engineer accepting employment under such conditions, and remaining in service without reliance on any promise of the master to remove the cause of danger, assumed the risk of the bolts catching the pipe and breaking it, and throwing part of it against him, although he did not anticipate that such an event might result from the situation of things.

—Detroit Crude-Oil Co. v. Grable, 94 Fed. 73.....36 C. C. A. 94

A master is liable for an injury to a servant, resulting from an obvious defect and known danger, where the servant relied on an express or implied promise by the master to make repairs, for such time as would be

Digitized by Google

reasonably required to repair the defect, but no longer; and, in the event of an injury during such time, the servant could recover therefor.

—Detroit Crude-Oil Co. v. Grable, 94 Fed. 73.....36 C. C. A. 94

The danger of a hatch between decks, usually left open and unlighted, is assumed by one engaged to coal the vessel, and who had been so employed two or three times a week for a year on the same vessel, or vessels of the same construction, and on which the custom as to lighting and covering the hatch was the same; he having, on going towards it, after completion of his work, to make his exit by the ladder leading from it, and without availing himself of one of the lanterns furnished, fallen down it.

—The Saratoga, 94 Fed. 221.....36 C. C. A. 208

That an open, unlighted hatch between decks, down which an employé, who had been engaged in coaling the vessel, fell when going to it, to make his exit by a ladder leading from it to the upper, was usually unlighted, is shown, in the absence of conflicting evidence, by testimony of witnesses that the kind of light there usually was exactly the same as on the evening of the accident, and that the coaling of the vessel and putting out of the lights had always been done in the same way before, and the testimony of one of the coaling gang that, when he heard some one had fallen, he started along with his lamp in his hand, "which," he said, "I always do. I take my lamp to see my way out."

—The Saratoga, 94 Fed. 221.....36 C. C. A. 208

It is the duty of a master operating a mine to use all appliances readily attainable, known to science, for the prevention of accidents arising from the accumulation of gas or other explosive substances.

—Western Coal & Mining Co. v. Berberich, 94 Fed. 329.....
36 C. C. A. 364

A rock weighing some 200 tons, which was embedded in the face of the slope of a railroad cut along the side of a mountain, slid from its place, in the night, upon the track, and an engine attached to a train, coming in collision with it, was wrecked, and the engineer killed. The cut was through a formation known as "slide," consisting of loose boulders embedded in clay or gravel and the slope stood at an angle of about 45 degrees. The road had been built about eight years, during which time no change had been made in the slope, and the only inspections had been made by observations from passing trains or hand cars. The bank was regarded as safe by the company's engineers. There had been no recent rains, and no night patrol of the cut was being made at the time. *Held*, in an action against the railroad company to recover for the death of the engineer, that such facts did not warrant a peremptory instruction for the defendant, but that the question whether it had exercised ordinary care to construct and maintain its track in a reasonably safe condition was one for the jury.

—Clune v. Ristine, 94 Fed. 745.....36 C. C. A. 450

A seaman does not assume the risk involved in the use, under orders, of patently defective appliances furnished him by the master.

—Lafourche Packet Co. v. Henderson, 94 Fed. 871...36 C. C. A. 519

Plaintiff had been for years foreman of track repairs on the tracks in the yards of the defendant railroad company, and was familiar with the course of business in switching in the yards. He knew that when an engine of the defendant went westward beyond a certain point on a certain track it must return on another track. He knew that an engine had gone upon the first-named track, and must shortly return upon the other. He glanced at the switches, and thought he saw that the track was closed, and walked between the tracks, and turned to cross on the return track, when he was struck by the engine. He did not look, on the assumption that the engine was not coming, because he had heard no signal of its approach. *Held*, that he was guilty of contributory negligence.

—Grand Trunk Ry. Co. of Canada v. Baird, 94 Fed. 946.....
36 C. C. A. 574

Digitized by Google

MINES AND MINERALS.

§ 1. Title, conveyances, and contracts.
A court of equity has jurisdiction of a suit to enjoin a trespasser from working a mine upon, and removing mineral from, land the title to which has been finally adjudicated in complainant's favor.
—Dimick v. Shaw, 94 Fed. 266.....36 C. C. A. 347

MORTGAGES.

Abandonment of homestead in favor of mortgagee, see "Homestead," § 1.
By corporation, see "Corporations," § 4.
Personal property, see "Chattel Mortgages."
Property which passes under mortgage, see "Bailment."
Railroad mortgages, see "Railroads," § 3.

§§ 1, 2. Construction and operation.
Notes, and a mortgage securing the same, executed at the same time, constitute a single contract, and a provision of the mortgage that, on the failure of the maker to perform any agreement contained in either the notes or mortgage, the entire debt may be collected, gives the holder the right, on default in the payment of interest, to declare the notes due for all purposes, and to collect them by suit in the ordinary form, as well as by foreclosure.
—Brewer v. Penn Mut. Life Ins. Co., 94 Fed. 347....36 C. C. A. 289

§ 3. Rights and liabilities of parties.
The right and obligation of a mortgagee in possession to apply rents and profits upon the mortgage debt is a doctrine of equity, and is not affected by a state statute providing that a mortgage is only security for a debt, and passes no title, as mortgages were always so regarded by courts of equity.
—Huguley Mfg. Co. v. Galeton Cotton Mills, 94 Fed. 269.....
36 C. C. A. 236

A mortgagee may maintain an action at law for an injury wrongfully done to the mortgaged property, whereby its value is lessened, and his security impaired, provided he sustains an actual loss thereby, and the measure of his recovery is the amount of such loss.
—Hubinger v. Central Trust Co. of New York, 94 Fed. 788.....
36 C. C. A. 494

§ 4. Foreclosure by action.
A mortgagee having a valid mortgage which is foreclosed in a court of competent jurisdiction, and who becomes the purchaser under the decree, and is given possession of the property, cannot be treated as a trespasser wrongfully in possession on a subsequent reversal of the decree, but is entitled on an accounting to the benefit of the equitable rules governing mortgagees in possession, and to have the rental value of the property during his possession applied on a deficiency remaining due him after its resale.
—Huguley Mfg. Co. v. Galeton Cotton Mills, 94 Fed. 269.....
36 C. C. A. 236

The Iowa statute (McClain's Ann. Code, § 4429), providing that property acquired by a purchaser in good faith, under a judgment subsequently reversed, shall not be affected by such reversal, does not apply to a case where an order confirming a sale of property under a decree of foreclosure is alone appealed from and reversed, the purchaser being a party to the appeal, and on such reversal it is the duty of the purchaser to restore the property.
—Hubinger v. Central Trust Co. of New York, 94 Fed. 788.....
36 C. C. A. 494

Digitized by Google

§ 5. Redemption.

Under Code Civ. Proc. Neb. § 497a (Comp. St. p. 595), providing for redemption by the owner of premises sold under foreclosure, the owner may redeem, where other than the plaintiff was purchaser, by paying the purchaser, or tendering into court before the confirmation of the sale, the amount of his bid, with 12 per cent. interest from the date of sale.

—Clarke v. Northwestern Mut. Life Ins. Co., 94 Fed. 262..... 36 C. C. A. 233

It is not the business of courts to anticipate controversies, and it will not take jurisdiction of a petition of the owner of the equity of redemption asking leave to redeem from a foreclosure sale, and the advice and instruction of the court as to the effect of redemption, and the nature of the title that will accrue to the redemptioner.

—Clarke v. Northwestern Mut. Life Ins. Co., 94 Fed. 262..... 36 C. C. A. 233

Where the court entertains a petition of the owner of the equity of redemption asking leave to redeem from a foreclosure sale, it cannot pass on the question of the effect of the redemption, and the rights and title acquired by it.

—Clarke v. Northwestern Mut. Life Ins. Co., 94 Fed. 262..... 36 C. C. A. 233

MUNICIPAL CORPORATIONS.

§ 1. Proceedings of council or other governing body.

That a police provision pursuant to clear legislative authority is found in an ordinance which contains contract provisions does not affect the essential character of the power exercised, as within the corporate limits the police provision has the force of a law enacted by the legislature.

—Pittsburg, C. & St. L. Ry. Co. v. Hood, 94 Fed. 618..36 C. C. A. 423

§ 2. Public improvements.

A contractor for the making of public improvements in an Illinois city, governed by the city and village act (1 Starr & C. Ann. St. [2d Ed.] 777 et seq.), which provides (article 9, § 49) that all persons taking such contracts, who agree to be paid from special assessments, "shall have no claim or lien upon the city or village in any event, except from the collection of the special assessment made for the work contracted for," and whose contract provided that he should make no claim against the city in any event, except from collections, and should take all risk of the invalidity of the special tax, cannot maintain an action against the city for a general judgment on the ground that its officers failed or refused to levy a second assessment after the first had been held invalid by the supreme court of the state, but is confined to his remedy to compel the officers to perform their duty.

—City of Pontiac v. Talbot Pav. Co., 94 Fed. 65....36 C. C. A. 88

Act Pa. Feb. 24, 1871 (P. L. 126), provides for the making and keeping in the office of the engineer of the city of Pittsburg of books of plans showing the situation and dimensions of property in the city, and also containing the names of the owners, and a record of transfers. It makes it the duty of owners to have their property registered in such books, requires grantees to have their conveyances entered thereon before they shall be eligible to record, and prothonotaries and clerks of courts in which proceedings for partition shall be had to make reports thereof to the engineer showing the divisions and transfers of property therein made, and provides that property shall not be subject to sale for taxes or other municipal claims except in the name of the registered owner. The purpose of the act, as declared by the supreme court of the state, is to facilitate the assessment and collection of taxes and municipal claims on real estate, and to protect the registered owners against the sale of their property for taxes or assessments without notice to them. A conveyance made in 1837 of what was then a rural tract of land, but later became a part of the city, was entered on the books of the engineer. In 1871, after

Digitized by Google

the death of the grantee, the land was partitioned among her heirs, but the proceedings were not reported to the engineer by the clerk as required by law. Subsequently one of the heirs to whom a portion had been allotted subdivided the same, the plan thereof being approved by the engineer, and entered on his books in the name of the heir. *Held* that, as to the lots shown by such subdivision, the heir, and not her ancestor, was the registered owner for the purposes of municipal assessment, and that liens for such assessments filed thereon in her name when she was in fact the owner, and which were otherwise regular, were valid as against a subsequent incumbrancer claiming through her.

—City of Pittsburg v. Murphy, 95 Fed. 57.....36 C. C. A. 654

§ 3. **Fiscal management, public debt, securities, and taxation.**

Under the constitution of Montana, which limits the indebtedness of municipal corporations, and provides that all obligations in excess of the amount so limited shall be void, a city not authorized by statute to levy and collect a special tax for water purposes, and which is already indebted beyond the constitutional limit, has no power to bind itself by a contract for a supply of water to be furnished for municipal purposes; and a claim accrued for water furnished under such a contract is within the constitutional prohibition, and cannot be enforced.

—City of Helena v. Mills, 94 Fed. 916.....36 C. C. A. 1

The Pennsylvania act of May 23, 1889 (P. L. 277), provides that no municipal department of a city of the third class shall create any debt or make any contract, except in pursuance of previous authority of law or ordinance; that every contract which involves an appropriation of money shall designate the item of appropriation on which it is founded, and the estimated amount of appropriation thereunder shall be charged against such item, and so certified by the controller on the contract, before it shall take effect; and that, if the controller shall certify any contract in excess of the appropriation made therefor, the city shall not be liable for such excess, but the controller may be held liable therefor on his bond. The act also authorizes the creation of a water and lighting department, the board of commissioners of which shall make all contracts relating to the department, but only as authorized thereto by the previous consent and direction of the councils. The councils of the city of Altoona, which is a city of the third class, passed an ordinance providing for the construction of certain improvements to the city's water plant, and directed the board of water commissioners to contract therefor. It appropriated for the purpose an unexpended balance of a fund previously created amounting to $35,000, and expressly limited the cost of the improvements to that sum. The board entered into a contract with plaintiffs for the construction of the improvements for a sum slightly under $35,000, but providing for an increase or diminution in the estimated quantities of work or materials. The controller certified the contract, in general terms, as "subject to the appropriation made" by the ordinance, but stated no amount in his certificate. *Held*, that the plaintiffs could not recover against the city on such contract any sum in excess of the $35,000 appropriated by the ordinance, being chargeable with notice of the limitations placed upon the powers of the board by the statute and the ordinance.

—Jutte & Foley Co. v. City of Altoona, 94 Fed. 61....36 C. C. A. 84

The board of education of the city of Huron, organized under Laws Dak. 1887, c. 47, is a body corporate, separate and independent from the city of Huron, and, in determining whether bonds issued by it increase the corporate indebtedness beyond the prescribed limit, its debts, and not the debts of the city, are to be computed.

—Board of Education of City of Huron, S. D., v. National Life Ins. Co. of Montpelier, Vt., 94 Fed. 324; Same v. Peaslee, Id.; Same v. Monadnock Sav. Bank, Id.....36 C. C. A. 278

Comp. Laws Dak. 1887, §§ 1149, 1150, providing that the limit of bonded indebtedness that may be incurred by a city or other municipal corporation shall be based on its assessed valuation for the year preceding the incur-

Digitized by Google

ring of the indebtedness, do not apply to boards of education created under Laws Dak. 1887, c. 47, which is complete in itself, and restricts the power of boards of education to issue bonds to an amount not exceeding 3 per cent. of their assessed valuation, though it is silent as to what assessment shall be used in the computation.

—Board of Education of City of Huron, S. D., v. National Life Ins. Co. of Montpelier, Vt., 94 Fed. 324; Same v. Peaslee, Id.; Same v. Monadnock Sav. Bank, Id.....36 C. C. A. 278

Under Laws Dak. 1887, c. 47, restricting the power of boards of education to issue bonds to an amount not exceeding 3 per cent. of their assessed valuation, the computation must be based on the last completed assessment before the bonds were issued.

—Board of Education of City of Huron, S. D., v. National Life Ins. Co. of Montpelier, Vt., 94 Fed. 324; Same v. Peaslee, Id.; Same v. Monadnock Sav. Bank, Id.....36 C. C. A. 278

The city of Lampasas was incorporated April 18, 1873, under a special charter, authorizing its mayor and aldermen, among other things, to construct waterworks and issue bonds for public improvements. Its organization was perfected, and continued until 1876, when its officers resigned, and administration of its affairs was abandoned. In 1883 an effort was made to form a new municipality, including within its limits the territory of the original city and a large amount of contiguous territory. Officers were elected, and the new government was organized, and continued to perform the functions of a municipal corporation until 1890, when quo warranto proceedings were instituted, and the officers removed, on the ground that the special act of 1873 was still in force, and that the resignation of its officers and its failure to continue the administration of its affairs did not amount to a dissolution of the corporation. Thereafter an election was held under the charter of 1873, and its government reorganized, and nearly all of the additional territory attempted to be included in the new city was subsequently annexed. In 1885, while the illegal organization was in force, it issued bonds for the purpose of constructing waterworks. The waterworks were constructed and accepted by the city. Upon the dissolution of this organization, the waterworks passed into the possession of one holding a claim for services as superintendent, and the city ceased to exercise control over the same, and paid to the person in possession monthly rates for the use of the water. *Held*, that the officers acting under the irregular organization were de facto officers of the city, and the bonds issued by them were valid.

—City of Lampasas v. Talcott, 94 Fed. 457.....36 C. C. A. 318

The fact that the municipal authorities gave a credit to the purchaser of the bonds of a town, instead of selling them for cash, as required by the statute, is not a defense to an action on such bonds by a subsequent bona fide purchaser.

—Town of Greenburg v. International Trust Co., 94 Fed. 755..... 36 C. C. A. 471

NATIONAL BANKS.

See "Banks and Banking," § 3.

NEGLIGENCE.

Of employers, see "Master and Servant," § 2.
Of railroad companies, see "Railroads," § 5.
Of servant, see "Master and Servant," § 2.

§ 1. Proximate cause of injury.

The proximate cause of one of the coaling gang on a vessel falling down a hatch between decks, open and unlighted, as usual, towards which he started to make his exit by the ladder leading from it to the upper deck,

Digitized by Google

is his failure to make use of one of the lanterns furnished the men to guide themselves as well as their wheelbarrows; he knowing of the hatch and of the custom relative thereto.
—The Saratoga, 94 Fed. 221.....36 C. C. A. 208

§ 2. **Contributory negligence.**
Where the father of a child two years of age was absent from home, and the mother had gone to a neighbor's, a short distance away, leaving the child, with older children, at play in the yard, where a neighbor was also at work, and the child escaped, unobserved, and went upon a railroad track some 250 feet from the house, and was run over and killed by a passing train, it cannot be held, as a matter of law, that the parents were guilty of contributory negligence, but the question is one for the jury.
—Garner v. Trumbull, 94 Fed. 321.....36 C. C. A. 361

NONSUIT.

Before trial, see "Dismissal and Nonsuit."

NOTES.

Promissory notes, see "Bills and Notes."

NOTICE.

Loss insured against, see "Insurance," § 6.

NUISANCE.

§ 1. **Public nuisances.**
In the absence of legislative authority, either direct or through the authorized action of a municipality, the construction and use by a railroad company of its road longitudinally on a public highway is a public nuisance.
—Pittsburg, C. & St. L. Ry. Co. v. Hood, 94 Fed. 618..36 C. C. A. 423

OFFICERS.

Bank officers, see "Banks and Banking," §§ 1, 2.
Corporate officers, see "Corporations," § 3.

OPINION EVIDENCE.

In civil actions, see "Evidence," § 6.

ORDERS.

Review of appealable orders, see "Appeal and Error."

PARENT AND CHILD.

See "Adoption."

PAROL EVIDENCE.

In civil actions, see "Evidence," § 5.

Digitized by Google

PARTIES.

On appeal or writ of error, see "Appeal and Error," § 3.

§ 1. Defendants.

The government is not a necessary party to a suit by the assignee of a contract with it against the assignor to enjoin his collecting or receiving the money due under it, and to settle as between the parties the better right to the fund.

—Dulaney v. Scudder, 94 Fed. 6.....36 C. C. A. 52

PARTNERSHIP.

§ 1. The relation.

B., who was the owner of a publishing company, entered into a contract with S., by which he sold and assigned to him an interest in the business, reciting that it was shortly to be incorporated, in consideration of past services, and that S. should devote his services to the company for 10 years. The contract provided that the interest of S. should be forfeited and revert to B. if S. should fail to perform his part of the contract, and that one-half of it should revert in case of his death within five years. It further provided that the salary of S. should be a certain sum per month. *Held*, that the contract created a partnership, and contemplated the payment of the salary of S. by the firm, or by the corporation when formed, and that an action to recover such salary could not be maintained against B. individually.

—Bancroft v. Hambly, 94 Fed. 975.....36 C. C. A. 595

PATENTS.

§ 1. Patentability.

On a question of anticipation, if the identity of methods and results is doubtful, the doubt must be resolved in favor of the successful patentee, who, in a practical way, has materially advanced the art. Judgment (C. C. 1898) 90 Fed. 201, modified.

—Simonds Rolling-Mach. Co. v. Hathorn Mfg. Co., 93 Fed. 958; Hathorn Mfg. Co. v. Simonds Rolling-Mach. Co., Id.....
36 C. C. A. 24

Large sales and increasing popularity cannot be accepted as certain proofs of novelty and invention, especially when the article, as made and sold by complainant, differs in many respects from the article shown in the specifications, and covered by the claims.

—Christy v. Hygeia Pneumatic Bicycle Saddle Co., 93 Fed. 965.....
36 C. C. A. 31

There is no invention in constructing a bicycle saddle top with vertical, walled depressions, adapted to receive two cushions or pads, and hold them firmly in place.

—Christy v. Hygeia Pneumatic Bicycle Saddle Co., 93 Fed. 965.....
36 C. C. A. 31

There is no invention in merely applying and adapting, to the planing and grooving of cakes of ice, mechanism previously used in the planing of wood.

—Briggs v. Duell, 93 Fed. 972.....36 C. C. A. 38

When a specific element is not claimed as a device by itself, but all the claims are for a combination, this is, in effect, an admission that such element was old, and was not invented by the patentee.

—Overweight Counterbalance Elevator Co. v. Improved Order of Red Men's Hall Ass'n of San Francisco, 94 Fed. 155..36 C. C. A. 125

In a safety valve, the making of an extension consisting of two rods, upward, within and through the top of the valve case, and above the

Digitized by Google

muffler, for the purpose of affording means for controlling from the outside the steam-regulating device, does not, under the circumstances of this case, involve patentable invention.
—Crosby Steam Gage & Valve Co. v. Ashton Valve Co., 94 Fed. 516.... 36 C. C. A. 335

To be entitled to the benefit of the doctrine of equivalents, it is not essential that the patent shall be for a pioneer invention in the broad sense of that term. If the invention is one which marks a decided step in the art, and has proved of value to the public, the patentee will be entitled to the benefit of the rule of equivalents, though not in so liberal a degree as if his invention were of a primary character.
—Bundy Mfg. Co. v. Detroit Time-Register Co., 94 Fed. 524..... 36 C. C. A. 375

In a workman's time recorder, the mere substitution, for a turning key having the workman's number on its ward, of a pushing key having such number upon a fin, the function of each being to set in motion mechanism which operates the impression devices, is but the use of a mechanical equivalent.
—Bundy Mfg. Co. v. Detroit Time-Register Co., 94 Fed. 524..... 36 C. C. A. 375

The meritoriousness of an improvement depends—First, upon the extent to which the former art taught or suggested the step taken; and, second, upon the advance made in the usefulness of the machine as improved.
—Bundy Mfg. Co. v. Detroit Time-Register Co., 94 Fed. 524..... 36 C. C. A. 375

§ 2. Disclaimers.
To be estopped by the action of the patent office, the patentee must be shown to have surrendered something which he now claims in order to obtain that which was allowed.
—Bundy Mfg. Co. v. Detroit Time-Register Co., 94 Fed. 524..... 36 C. C. A. 375

§ 3. Infringement.
Where the suit is brought against a corporation and certain individual defendants, and infringement is found, the decree need not be limited to the joint infringement of all the defendants, but may also go against the individual defendants for their several individual infringements. Judgment (C. C. 1898) 90 Fed. 201, modified.
—Simonds Rolling-Mach. Co. v. Hathorn Mfg. Co., 93 Fed. 958; Hathorn Mfg. Co. v. Simonds Rolling-Mach. Co., Id..... 36 C. C. A. 24

A patent for a machine for making leaden bullets and shot by rolling or forging the piece of lead between cylindrical dies, the edges of which are sharpened to cut away surplus material, *held* not to have anticipated an invention for forging metal articles which are circular in cross section, such as car axles, etc., which operates by forging the hot metal and spreading or crowding away the surplus material, and compacting the outer surface of the article forged. Judgment (C. C. 1898) 90 Fed. 201, modified.
—Simonds Rolling-Mach. Co. v. Hathorn Mfg. Co., 93 Fed. 958; Hathorn Mfg. Co. v. Simonds Rolling-Mach. Co., Id..... 36 C. C. A. 24

A patent for an eyeglass case, having a cover or lid of stiff material, bulged out in the middle, or buckled, so that the edges thereof fit close on the edges of the front piece while at the middle of the cover room is left to fit over the projecting or bulged portion of the front piece of the eyeglasses, *held* not infringed by a case which, among other differences, has a flexible and resilient lid, which is not bulged or buckled, but has a plain surface.
—Warren v. Casey, 93 Fed. 963.....36 C. C. A. 29

A patent for a bed bottom, in which the novelty consists altogether in connecting the ends of the transverse stiffening rods or strips to the side

Digitized by Google

edges of the woven-wire fabric, is not infringed by a mattress in which there is no such connection, and which has its transverse tie wires attached at their outer ends to the frame.

—Ryan v. Runyon, 93 Fed. 970.....36 C. C. A. 36

A patent for an improved spring mattress made in two parts, and in which a conspicuous feature is the manner of hinging the two sections together by means of a continuous unbroken woven-wire facing, free from the ridge or hard unyielding hinge piece found in other hinged mattresses, is not infringed by a mattress in which the two sections have a central longitudinal iron brace or tie rod, which also acts as a hinge rod, running through the upper facing or web of the mattress from end to end.

—Ryan v. Runyon, 93 Fed. 970.....36 C. C. A. 36

There is no error in admitting in evidence a patent of which notice has not been given, under Rev. St. § 4920, where it is introduced, not as an anticipation, but merely to show the prior state of the art, as bearing solely upon the question of infringement.

—Overweight Counterbalance Elevator Co. v. Improved Order of Red Men's Hall Ass'n of San Francisco, 94 Fed. 155..36 C. C. A. 125

Where, in a jury trial, the question is as to whether an element in defendant's machine is the mechanical equivalent of one of the elements in the patented machine, the mere fact that there is testimony by experts that it is such an equivalent does not necessarily require the submission of the case to the jury; for the court is not bound to accept the opinion of experts, but may draw its own conclusions from an inspection of the respective machines or models, and if, in its opinion, the evidence is insufficient to support a verdict for the plaintiff, it may instruct the jury to find for defendant.

—Overweight Counterbalance Elevator Co. v. Improved Order of Red Men's Hall Ass'n of San Francisco, 94 Fed. 155..36 C. C. A. 125

If the invention claimed be but an improvement on a known machine, by a mere change of form or combination of parts, the patentee cannot treat another as an infringer who has improved the original machine by the use of a different form or combination performing the same functions. The inventor of the first improvement cannot invoke the doctrine of equivalents to suppress all other improvements which are not mere colorable evasions of the first.

—Overweight Counterbalance Elevator Co. v. Improved Order of Red Men's Hall Ass'n of San Francisco, 94 Fed. 155..36 C. C. A. 125

In a case of wanton infringement, where it appeared that defendant had made and used a certain number of the infringing articles, and that the business of manufacturing the patented article as carried on by the patentee was one in which the expenses of manufacture could be readily computed, *held*, that he was entitled to recover the difference between the cost of manufacture, as shown by his evidence, and his established selling price, in the absence of any evidence contradicting his figures; especially when, if successful contradiction were possible, it lay within defendant's power to furnish the evidence.

—Rose v. Hirsh, 94 Fed. 177.....36 C. C. A. 132

In cases of wanton infringement, any doubt arising in respect to the sufficiency of the evidence to warrant a finding of the amount of damages is to be resolved against the infringer.

—Rose v. Hirsh, 94 Fed. 177.....36 C. C. A. 132

Where the patentee himself manufactures the patented article, and maintains a close monopoly, so that one desiring to use it could purchase it only from him, it is proper, in case of wanton infringement, to conclude that but for the infringement the infringer would have purchased the articles from the patentee, and consequently that the latter is entitled to all damages resulting from the loss of such sales.

—Rose v. Hirsh, 94 Fed. 177.....36 C. C. A. 132

Digitized by Google

A patent for a workman's time recorder, in which the printing is done by pressing a recording strip against the type by a blow from an impression hammer, is infringed by a mechanism in which the type is pressed upon the recording strip by pressure only. The two methods are mere mechanical equivalents.
—Bundy Mfg. Co. v. Detroit Time-Register Co., 94 Fed. 524..... 36 C. C. A. 375

One may not escape infringement by the mere joinder of two elements into one integral part, if the united part effects the same results, in substantially the same way, as the separate parts before the union.
—Bundy Mfg. Co. v. Detroit Time-Register Co., 94 Fed. 524..... 36 C. C. A. 375

A patent owner who, for about 14 years, witnesses the extensive and increasing manufacture and sale of an alleged infringing machine, without taking any steps to enforce his rights, is guilty of laches precluding him from maintaining an infringement suit.
—Richardson v. D. M. Osborne & Co., 93 Fed. 828...36 C. C. A. 610

§ 4. Decisions on the validity, construction, and infringement of particular patents.

The right of the owner of the Fowler patent, No. 181,664, for an improvement in machines for bundling grain, to sue for infringement, *held* to have been lost by laches.
—Richardson v. D. M. Osborne & Co., 93 Fed. 828...36 C. C. A. 610

The Hinkle patent, No. 257,943, for an improvement in freight and passenger elevators, construed, and *held* not infringed.
—Overweight Counterbalance Elevator Co. v. Improved Order of Red Men's Hall Ass'n of San Francisco, 94 Fed. 155..36 C. C. A. 125

The Bauer patent, No. 305,882, for a watchman's time detector, construed, limited, and *held* not infringed as to claim 4 by the time recorder of the Watson patent, No. 515,805.
—Bundy Mfg. Co. v. Detroit Time-Register Co., 94 Fed. 524..... 36 C. C. A. 375

The Simonds patent, No. 319,754, for improvements in dies for forging articles circular in cross section, such as car axles, etc., *held* not anticipated by the Bundy English patent of May 1, 1806, for "machines or instruments for making leaden bullets and other shot," and also *held* valid and infringed as to claim 1. Judgment (C. C. 1898) 90 Fed. 201, modified.
—Simonds Rolling-Mach. Co. v. Hathorn Mfg. Co., 93 Fed. 958; Hathorn Mfg. Co. v. Simonds Rolling-Mach. Co., Id..... 36 C. C. A. 24

The incorporation, into the first claim of the Briggs patent, No. 367,267, for an apparatus for planing cakes of ice (which claim was adjudged invalid by the circuit court of appeals), of new matter describing a cutter consisting of a number of points, which will not only cut, but groove, the ice in one operation, and of an ice elevator adapted to force the ascending cakes of ice into contact with the cutter, would not make the claim patentable, so as to warrant a reissue.
—Briggs v. Duell, 93 Fed. 972.....36 C. C. A. 38

The Tower patent, No. 378,223, for a penholder with a layer of cork, called a "sleeve," at its lower end, to form a cushion (supposed to be antinervous), construed, and *held* not infringed.
—Tower v. Eagle Pencil Co., 94 Fed. 361.....36 C. C. A. 294

The Gail patent, No. 399,867, for an improvement in woven-wire mattresses or bed bottoms, construed, as limited by the prior state of the art to the specific form shown and described, and *held* not infringed.
—Ryan v. Runyon, 93 Fed. 970.....36 C. C. A. 36

The Ryan patent, No. 403,143, relating to woven-wire mattresses or bed bottoms, construed, as limited by the prior state of the art to the specific constructions shown, and *held* not infringed.
—Ryan v. Runyon, 93 Fed. 970.....36 C. C. A. 36

Digitized by Google

The Simonds patent, No. 419,292, for a method of making rolled-metal forgings that are circular in cross-sectional area, *held* not anticipated by the Bundy English patent of May 1, 1806, and also *held* valid and infringed. Judgment (C. C. 1898) 90 F. 201, modified.

—Simonds Rolling-Mach. Co. v. Hathorn Mfg. Co., 93 Fed. 958; Hathorn Mfg. Co. v. Simonds Rolling-Mach. Co., Id. ..... 36 C. C. A. 24

The Bundy patent, No. 452,894, for a workman's time recorder, construed, and *held* infringed as to claims 3 and 4 by the time recorder of the Watson patent, No. 515,805.

—Bundy Mfg. Co. v. Detroit Time-Register Co., 94 Fed. 524..... 36 C. C. A. 375

The Lohbiler patent, No. 496,058, for improvements in safety valves, is void for want of invention.

—Crosby Steam Gage & Valve Co. v. Ashton Valve Co., 94 Fed. 516.... 36 C. C. A. 335

The Christy patent, No. 532,444, for a bicycle saddle having a solid top, with vertical, walled depressions, adapted to receive and hold in place two cushions or pads, is void for want of invention.

—Christy v. Hygeia Pneumatic Bicycle Saddle Co., 93 Fed. 965..... 36 C. C. A. 31

The Warren patent, No. 589,676, for an eyeglass case, construed as limited in view of the prior state of the art to the particular device described, and *held* not infringed.

—Warren v. Casey, 93 Fed. 963.....36 C. C. A. 29

PATENTS ENUMERATED.

UNITED STATES.

ORIGINAL.

24,076. Ice planers 39
117,442. Watchmen's clocks..... 378
150,126. Eyeglass cases 30
181,664. Harvesters 610
185,276. Hoisting apparatus 127
199,181. Telltale clocks 378
210,788. Time recorders 379, 392
212,420. Harvesters 611
257,943. Elevators 125, 126
271,220. Ice planers 39
295,949. Eyeglass cases 30
305,882. Time detectors ..376, 378, 392
310,093. Ice planers 39
319,092. Time recorders 379
319,754. Dies for forging metal articles 25
329,400. Ice planers 39
346,576. Ice planers 40, 41
367,267. Ice planers 38–40
378,223. Penholders 294, 295
393,205. Time recorders 379
399,867. Spring mattresses 37
403,143. Spring mattresses 37, 38
411,586. Time recorders 379
419,292. Dies for forging metal articles 25
426,378. Eyeglass cases 30
452,894. Time detectors 376
477,235. Eyeglass cases 30
487,367. Bicycle saddles 33
496,058. Safty valves 335
504,944. Tubular metal umbrella sticks 132
515,805. Time detectors 376
532,444. Bicycle saddles 31, 32
559,438. Eyeglass cases 30
589,676. Eyeglass cases 29, 30

REISSUED.

11,060. Ice planers 40, 41

PAYMENT.

See "Accord and Satisfaction."
Part payment within statute of limitations, see "Limitation of Actions," § 3.

PERSONAL INJURIES.

See "Assault and Battery," § 1; "Negligence."
To employé, see "Master and Servant," § 2.

Digitized by Google

PLEA.

In criminal prosecution, see "Criminal Law," § 2.

PLEADING.

In action for assault and battery, see "Assault and Battery," § 1.
—— for libel, see "Libel and Slander," § 3.
Indictment or criminal information or complaint, see "Indictment and Information."

§ 1. **Issues, proof, and variance.**
Where plaintiff in an action for damages counts on the loss of profit on a sale of property which he alleges he had made, but was prevented from consummating by reason of defendants' breach of a contract to sell him the property, and in compliance with an order of court files a bill of particulars, setting out the name of the person to whom he had made the sale, and its terms, he is not entitled to introduce evidence of a different sale to another person.
—Hanson v. Smith, 94 Fed. 960.....36 C. C. A. 581

§ 2. **Defects and objections, waiver, and aider by verdict or judgment.**
The sufficiency of a declaration is reviewable on error by the circuit court of appeals, and, if it fails to state a cause of action, the defect is not cured by a general finding for plaintiff by the circuit court, where a jury is waived, nor is it waived by the defendant by answering and proceeding to trial after his demurrer has been overruled.
—City of Pontiac v. Talbot Pav. Co., 94 Fed. 65....36 C. C. A. 88

POLICY.

Of insurance, see "Insurance."

PRACTICE.

See "Dismissal and Nonsuit"; "Judgment"; "Process"; "Trial."
Adoption by United States courts of practice of state courts, see "Courts," § 1.
Condemnation proceedings, see "Eminent Domain," § 2.
On review, see "Appeal and Error."
In admiralty, see "Admiralty"; "Maritime Liens," § 3.
In bankruptcy, see "Bankruptcy," § 1.
In criminal prosecutions, see "Criminal Law."
In equity, see "Equity."
Procedure of particular courts, see "Courts."

PRESUMPTIONS.

In civil actions, see "Evidence," § 2.

PRINCIPAL AND AGENT.

See "Attorney and Client."
Corporate agents, see "Corporations," § 3.
Insurance agents, see "Insurance," § 1.

Digitized by Google

§ 1. **The relation.**

Acts of an alleged agent tending to show the exercise of control and authority over the business of the principal, and declarations and statements of agency made in the presence of other known agents, are admissible to establish the agency.

—Southern Exp. Co. v. Platten, 93 Fed. 936.....36 C. C. A. 46

§ 2. **Rights and liabilities as to third persons.**

The fact that an agent also acts as agent for the party adversely interested in the transaction does not prevent his principal from being bound by notice to or knowledge acquired by such agent where the principal consents to such adverse agency.

—Pine Mountain Iron & Coal Co. v. Bailey, 94 Fed. 258..... 36 C. C. A. 229

Where one negotiating the sale of a mortgage for a trust company is also the agent of the proposed purchaser for the purpose of investing his money and examining his titles, and pending the negotiations the agent becomes the owner of the mortgage, without the knowledge of the principal, the agency ceases, so that on the subsequent purchase of the mortgage by the principal he is not bound by notice to or knowledge of the agent as to defects in the mortgage or its title, and is a bona fide purchaser for value.

—Pine Mountain Iron & Coal Co. v. Bailey, 94 Fed. 258..... 36 C. C. A. 229

The making of a note by the teller in favor of the depositor, which he placed with her securities in the bank, without her knowledge, and upon her merely expressing her willingness to make him a loan on security, when in fact no loan was made and no check was given by her, but the money had previously been wrongfully taken from her account, could not operate to bind her, as a ratification of such withdrawal, nor relieve the bank from liability to her therefor.

—National Bank of Oshkosh v. Munger, 95 Fed. 87...36 C. C. A. 659

A depositor in a bank authorized the teller to act as her agent in making and collecting loans, but he was not authorized to draw money from her account, except on checks procured from her. The arrangement was continued for a number of years, during which she gave several hundred checks, aggregating over $90,000. During the same time, without the authority or knowledge of the depositor, the bank permitted the teller from time to time to withdraw money from her account on a "teller's memorandum," which was merely a direction to the bookkeeper to charge her account with a stated sum, and such sums he appropriated to his own use. *Held*, that in such transactions the teller acted in his capacity as an officer of the bank, and not, so far as the bank was concerned, within the apparent scope of his agency for the depositor, and that the bank was liable to her for the amounts so withdrawn.

—National Bank of Oshkosh v. Munger, 95 Fed. 87...36 C. C. A. 659

A bank which permits an agent of a depositor to have money transferred from the depositor's account to the credit of a concern which it knows the agent to be chiefly interested in is chargeable with knowledge that he cannot bind his principal in such a transaction, and acts at its peril.

—National Bank of Oshkosh v. Munger, 95 Fed. 87...36 C. C. A. 659

PROCESS.

§ 1. **Service.**

Service in ancillary proceedings on the attorney of record in the original cause is sufficiently supported by an order permitting such substituted service, on bill alleging that defendant is not an inhabitant of the district, and cannot be served with process and summons therein, and that he has an attorney appearing for him in the case to which the suit is ancillary, and asking that service be made on such attorney.

—Pike v. Gregory, 94 Fed. 373.....36 C. C. A. 299

Digitized by Google

PROMISSORY NOTES.

See "Bills and Notes."

PROOF.

Taking and filing proof in equity, see "Equity," § 3.

PROPERTY.

See "Mines and Minerals"; "Shipping."
Taking for public use, see "Eminent Domain."

PROXIMATE CAUSE.

Of injury, see "Negligence," § 1.

PUBLIC DEBT.

See "Municipal Corporations," § 3.

PUBLIC LANDS.

§ 1. **Survey and disposal of lands of United States.**

A pre-emption settler on unsurveyed public lands, who, at the time a railroad grant attached by the definite location of the line of road, had in no way indicated the boundaries of his claim, cannot, by thereafter extending his improvements over a tract which he had not at that time claimed or improved, and which by the subsequent survey was shown to be within a section granted to the railroad company, acquire any claim or rights thereto as against the railroad company.

—United States v. Central Pac. R. Co., 94 Fed. 906..36 C. C. A. 546

The provision of section 6 of the Northern Pacific Railroad grant, that "the odd sections of land hereby granted" should not be liable to sale, or entry or pre-emption before or after their survey, except by the company, must be construed in connection with section 3, containing the grant, and which limited the same to lands to which the United States should "have full title * * * free from pre-emption or other claims or rights at the time the lien of said road is definitely fixed and the plat thereof filed." Hence lands to which pre-emption rights had attached at any time prior to the filing of the map of definite location, being reserved from the grant, were not within the provisions of section 6, and up to that time the right of pre-emption was not affected by anything in the act, or by the filing of the map of general route thereunder.

—Northern Pac. Ry. Co. v. McCormick, 94 Fed. 932..36 C. C. A. 560

A qualified settler, who enters upon and improves unsurveyed public land, with the intention of obtaining title thereto under the pre-emption laws, has a claim thereon, which is a right of pre-emption, and which continues until three months after the map of survey of the land has been filed in the land office, unless his entry is sooner made; and where a settler was so occupying and residing upon a tract of unsurveyed land at the time of the filing of the map of definite location of the line of the Northern Pacific Railroad, which brought the land within the boundaries of its grant, although the settler had made no application for entry, such land was at that time subject to a "pre-emption claim or right," within the meaning of the reservation clause of the act making such grant, and the company acquired no title thereto.

—Northern Pac. Ry. Co. v. McCormick, 94 Fed. 932..36 C. C. A. 560

Digitized by Google

By Act Cong. June 16, 1880 (21 Stat. 287), congress granted to the state of Nevada 2,000,000 acres of land, to be selected by the state from "unappropriated, nonmineral, public lands." By an act of the state legislature of March 3, 1887 (St. 1887, p. 102), the state expressly disclaimed on behalf of itself and its grantees any rights in any mineral lands which had been or might be selected under such grant, and further provided that its conveyances should give no rights as against persons in actual adverse possession. *Held*, that the state acquired no rights in land selected under the grant which was in fact known mineral land, containing both salt and the precious metals, which had been appropriated in 1865 under an act for the location of land containing salt, surveyed, and the location recorded, and which had ever since been in the actual possession of the locator and his grantees, who had erected a quartz mill thereon at a cost of over $50,000, and that a patent executed by the state therefor to an applicant to purchase who had actual knowledge of all such facts was void.

—Garrard v. Silver Peak Mines, 94 Fed. 983.....36 C. C. A. 603

Saline lands are mineral, within the meaning of a provision of an act of congress reserving mineral lands from a grant.

—Garrard v. Silver Peak Mines, 94 Fed. 983.....36 C. C. A. 603

§ 2. Disposal of lands of the states.

A patent, to lands issued by a state without authority of law, and prohibited by the law of the state which issued it, is subject to collateral attack in an action at law.

—Garrard v. Silver Peak Mines, 94 Fed. 983.....36 C. C. A. 603

PUBLIC USE.

Taking property for public use, see "Eminent Domain."

PUNISHMENT.

See "Criminal Law," § 5.

RAILROADS.

Use of highway, see "Nuisance," § 1.

§ 1. Railroad companies.

Where the entire property and franchise of a railroad company are sold in foreclosure proceedings, and conveyed to the purchaser, such act puts an end to the capacity of the company to do the only business for which it was created, and may be treated as a de facto dissolution of the corporation, for the purpose of a final administration of its assets; and such action is especially justified where there are preferred stockholders having a prior right in the distribution of any surplus remaining after payment of the debts of the corporation, but who have no voice in its management, and, in such case, a pending creditors' suit against the company may be utilized by the court for the purpose of requiring all creditors, on due notice by publication, to present their claims, and, on their adjustment and payment, for making distribution of any surplus in accordance with the rights of the stockholders as established in the foreclosure suit.

—Toledo, St. L. & K. C. R. Co. v. Continental Trust Co., 95 Fed. 497; Hamlin v. Same, Id.; Rose v. Same, Id.....36 C. C. A. 155

A provision in certificates of preferred stock issued by a railroad company, making such stock a lien on not only the net earnings, but on the property of the company, is not illegal, as against common stockholders, in the absence of a statute or charter provision affecting it; and, where such certificates were issued and placed on the market with the knowledge and acquiescence of the then owner of all the common stock, holders of

Digitized by Google

common stock cannot after 10 years, and on final distribution of the property of the company for the first time, raise the objection that such provision was not authorized by any action of the directors.

—Toledo, St. L. & K. C. R. Co. v. Continental Trust Co., 95 Fed. 497; Hamlin v. Same, Id.; Rose v. Same, Id.....36 C. C. A. 155

Under the statute of Illinois (3 Starr & C. Ann. St. p. 3241), providing that "whenever any railroad which is situated partly in this state and partly in one or more other states, and heretofore owned by a corporation formed by consolidation of railroad corporations of this and other states," has been sold under a decree of a court, and "purchased as an entirety," and is held by corporations of the different states in which it is situated, the Illinois corporation owning the portion within that state may consolidate with the others, it is no objection to the legality of such consolidation that the original consolidated company which operated the road before its sale, as to a short section of it, held only the equitable title, the legal title being in a local company, practically all of whose stock was owned by the consolidated company, nor can it be held that the road was not "purchased as an entirety," within the meaning of the statute, because it was sold in two divisions, being covered by separate mortgages, where both divisions were sold on the same day to the same purchaser, and were conveyed by one deed.

—Toledo, St. L. & K. C. R. Co. v. Continental Trust Co., 95 Fed. 497; Hamlin v. Same, Id.; Rose v. Same, Id.....36 C. C. A. 155

Where the statutes of a state authorize the consolidation of railroad companies of the state with those of other states under certain conditions or circumstances, a consolidation of such companies creates a de facto corporation, even though the constituent companies did not possess the qualifications required by the statute to render the consolidated company a corporation de jure, and its corporate existence can only be questioned on that ground by the state.

—Toledo, St. L. & K. C. R. Co. v. Continental Trust Co., 95 Fed. 497; Hamlin v. Same, Id.; Rose v. Same, Id.....36 C. C. A. 155

Under Rev. St. Ohio, § 3380, which permits the consolidation of an Ohio railroad company with a company of "an adjoining state," where the roads of the two companies will form a continuous line, the legality of a consolidation between an Ohio and an Indiana company is not affected by the fact that an Illinois company is also included as a constituent member of the consolidated company, where the roads owned by the three companies form a continuous line.

—Toledo, St. L. & K. C. R. Co. v. Continental Trust Co., 95 Fed. 497; Hamlin v. Same, Id.; Rose v. Same, Id.....36 C. C. A. 155

§ 2. **Right of way and other interests in land.**

Evidence of a partial occupancy of a right of way, to show that there was not an adverse holding of the remainder, is not admissible, where the suit, at its inception, was one for damages for occupancy of the entire right of way, in violation of the contract under which it was acquired.

—Scott v. Texas & P. Ry. Co., 94 Fed. 340.....36 C. C. A. 282

That a railroad did not for the statutory period adversely occupy its entire right of way is not material, where the contract under which the right of way was acquired has been fully complied with; the title under the contract alone being sufficient.

—Scott v. Texas & P. Ry. Co., 94 Fed. 340.....36 C. C. A. 282

Where authority, under power delegated by the legislature to a city, is given to construct a railroad upon city streets, reasonable conditions, essential for the protection of the public interest, may be imposed, which, if accepted by the company, are binding on the parties.

—Pittsburg, C. & St. L. Ry. Co. v. Hood, 94 Fed. 618..36 C. C. A. 423

The unauthorized occupation and use of highways by a railway company makes such company a trespasser, and liable for such damages as

Digitized by Google

proximately result to persons or property in the absence of contributory negligence.

—Pittsburg, C. & St. L. Ry. Co. v. Hood, 94 Fed. 618..36 C. C. A. 423

§ 3. **Indebtedness, securities, liens, and mortgages.**

Rev. St. Ohio, § 3313, providing that all stock, bonds, or securities of a railroad company purchased of the company by a director thereof, either directly or indirectly, for less than their par value, shall be "null and void," applies only to original sales made by the company, and the acquiring of an interest in bonds by a director through a contractor to whom the company had contracted to deliver them in payment for work, after they had been issued by the company, and deposited with trustees to be delivered to the contractor as the work progressed, either by direct purchase, or by a secret agreement, made after such issuance and deposit, for a share of the profits of the contract, does not invalidate such bonds.

—Toledo, St. L. & K. C. R. Co. v. Continental Trust Co., 95 Fed. 497; Hamlin v. Same, Id.; Rose v. Same, Id.....36 C. C. A. 155

Nor are they void under the statute by reason of a verbal option given certain directors by the contractor to purchase bonds from him for less than par, after they were earned under his contract, in consideration of their consent, as bondholders of a prior company, to a certain plan of reorganization, which agreement was wholly collateral to his contract with the company.

—Toledo, St. L. & K. C. R. Co. v. Continental Trust Co., 95 Fed. 497; Hamlin v. Same, Id.; Rose v. Same, Id.....36 C. C. A. 155

Such statute is for the protection of the corporation, and does not make stock or bonds of a company sold to a director for less than par absolutely void, but voidable only, and subsequent creditors cannot attack the validity of bonds on that ground, where it is not questioned by the corporation or its stockholders.

—Toledo, St. L. & K. C. R. Co. v. Continental Trust Co., 95 Fed. 497; Hamlin v. Same, Id.; Rose v. Same, Id.....36 C. C. A. 155

In ascertaining the price for which bonds of a railroad company were sold, for the purpose of determining their validity under a statute prohibiting their sale for less than 75 per cent. of their par value, but which fixed no minimum limit on the sale of stock, where the bonds were not sold for cash, but an amount of both bonds and stock were issued to a contractor in consideration of his agreement to purchase a railroad at foreclosure sale, to pay off liens thereon, to reconstruct it, changing it from a narrow-gauge to a standard-gauge road, and to equip it with rolling stock (in effect as the purchase price of a reconstructed and newly-equipped road), it is not necessary that the value of the consideration received by the company should be equally distributed between both bonds and stock, according to the amount of each issued to the contractor, but the stock may properly be computed in the payment at its market value; nor is the value of what was actually done by the contractor the measure of the consideration received by the company for the bonds, but the value of what he undertook by his contract to do.

—Toledo, St. L. & K. C. R. Co. v. Continental Trust Co., 95 Fed. 497; Hamlin v. Same, Id.; Rose v. Same, Id.....36 C. C. A. 155

Where a full settlement has been made between a railroad company and a contractor, to whom the company issued bonds in payment for work, which settlement was acquiesced in by all parties in interest, subsequent creditors of the company cannot attack the validity of the bonds on the ground of fraud on the part of the contractor or a failure to properly perform the contract.

—Toledo, St. L. & K. C. R. Co. v. Continental Trust Co., 95 Fed. 497; Hamlin v. Same, Id.; Rose v. Same, Id.....36 C. C. A. 155

The fact that a federal court acquires jurisdiction of a suit to foreclose a railroad mortgage, by reason of its being ancillary to a pending creditors' suit, in which the court has, through its receiver, taken possession of the

Digitized by Google

mortgaged property, does not make the two suits one, though, for convenience in hearing, they are consolidated, nor does it affect the rules governing parties, issues, or pleading in the foreclosure suit, and, where the mortgage constitutes the first lien on the property, it is not necessary that a decree of foreclosure should await the establishing and adjustment of all claims filed in the creditors' suit.
—Toledo, St. L. & K. C. R. Co. v. Continental Trust Co., 95 Fed. 497; Hamlin v. Same, Id.; Rose v. Same, Id.....36 C. C. A. 155

Under a railroad mortgage which expressly authorized a mortgagor to receive the income until default had been made for three months, whereupon the trustee could take possession of the road and operate the property until sale, or apply for a receiver, upon electing to ask for appointment of a receiver the right to the rents and profits inured to the mortgagee, subject to such terms as the court might impose, at the date of entry by the receiver.
—Central Trust Co. of New York v. Chattanooga, R. & C. R. Co., 94 Fed. 275; Owen v. Jones, Id.....36 C. C. A. 241

Neither the local laws of Georgia nor the decisions of the supreme court of that state limit the security of a mortgagee to the corpus, to the exclusion of the income after default.
—Central Trust Co. of New York v. Chattanooga, R. & C. R. Co., 94 Fed. 275; Owen v. Jones, Id.....36 C. C. A. 241

There being in force a general law for the incorporation of railroads which authorizes the mortgage of future-acquired property, the fact that the original or amended charter of a railroad company does not authorize a mortgage of after-acquired property will not affect the right to execute such mortgage, as power in that respect is given under the general law, and the lien of such a mortgage will take precedence of the liens of subsequent judgments on such after-acquired property.
—Central Trust Co. of New York v. Chattanooga, R. & C. R. Co., 94 Fed. 275; Owen v. Jones, Id.....36 C. C. A. 241

Where a decree for the sale of railroad property in a foreclosure suit contains an independent and unconditional provision that the sale shall be subject to all current liabilities of the receiver, the purchaser takes the property subject to such condition, without regard to the question of priority between such liabilities and the liens under which the sale is made.
—Anderson v. Condict, 94 Fed. 716.....36 C. C. A. 437

§ 4. **Receivers.**
Where a railroad corporation is unable to pay its currently accruing interest, it is actually, as well as technically, insolvent, and its property inadequate security for its mortgage debt, and it may be put in the hands of a receiver.
—Central Trust Co. of New York v. Chattanooga, R. & C. R. Co., 94 Fed. 275; Owen v. Jones, Id.....36 C. C. A. 241

That a mortgage does not expressly include the income on the property mortgaged is not material, as the mortgagee can only be interested in the income on default, on which event, if the maker is insolvent and the security inadequate, he is entitled to the appointment of a receiver to preserve not only the corpus, but the rents and profits, for the satisfaction of the debt.
—Central Trust Co. of New York v. Chattanooga, R. & C. R. Co., 94 Fed. 275; Owen v. Jones, Id.....36 C. C. A. 241

§ 5. **Operation.**
Where the evidence showed that the engineer, on a descending grade, did not discover a child on the track until within a train's length of him, when he applied the air brakes, released the sand, and did everything to stop the train, short of reversing the engine, which would result in a wreck, the reiteration of language in the instruction tending to show that in the court's view he should have reversed the engine was erroneous,

Digitized by Google

as it was the duty of the jury to determine from the evidence whether the care of the engineer was such as a prudent man would have used.

—Texas & P. Ry. Co. v. Harby, 94 Fed. 303.....36 C. C. A. 353

An instruction, in an action against a railroad for causing the death of an infant, which states that it is the duty of the engineer to use every means within his ability to stop the train in order that no injury may be inflicted to one on the track, and that a failure to exercise every power and means consistent with the safety of those on the train and engine to stop the train will render them liable in damages, and which is defective as requiring too high a degree of care, is not rendered less misleading or cured by adding that, "In this respect you are charged that a reasonably prudent and cautious person would have used all the efforts in his power and within his means and ability, consistent with the safety of those on the train and engine, to stop the train," and by conversely stating the matter, saying, "If, however, the engineer, after discovering the peril of the child, used all the efforts at his command, consistent with the safety of those on the engine and the train, to stop the train, and avoid the injury," etc., as the charge clearly limits the qualification of the duty to use all means, etc., alone by the terms "consistent with the safety of those on the engine and train."

—Texas & P. Ry. Co. v. Harby, 94 Fed. 303.....36 C. C. A. 353

An instruction, in an action against a railroad for causing the death of an infant, after stating that servants operating a train should use "such care as an ordinarily prudent person would exercise to stop the train in order to prevent injury to the party on the track," was qualified, without coming to a period, by adding: "And in this behalf the care and caution an ordinarily prudent person would use would be to use every power within their ability and means to stop the train, in order that injury might not be inflicted on the person on the track; and if they fail to exercise this care, and to use every power and means consistent with the safety of themselves in their position on the train, and by reason of their failure to exercise such care and caution the person is injured, then they would be liable for any damage sustained or loss occasioned by reason of the injury." *Held* to require a degree of care higher than such as "ordinarily prudent persons would exercise."

—Texas & P. Ry. Co. v. Harby, 94 Fed. 303.....36 C. C. A. 353

When, for a considerable period, numerous persons have been accustomed to walk across or along a railroad track between given points, those in charge of passing trains are required to take notice of such fact, and to use reasonable precautions to prevent injury to persons whose probable presence on the track should be anticipated.

—Garner v. Trumbull, 94 Fed. 321.....36 C. C. A. 361

An ordinance, under power delegated by the legislature, granting a railway company a right to construct a railroad upon a public landing under condition prohibiting use of the track during specified hours, combines contractual as well as police provisions, the latter being in the interest of public safety.

—Pittsburg, C. & St. L. Ry. Co. v. Hood, 94 Fed. 618..36 C. C. A. 423

Plaintiffs' intestate, a teamster, stopped his team on the landing at a wharf at a point 30 to 60 feet from a train, and commenced to unhitch the horses preparatory to hauling another wagon into position. A movement of the train at this time was made, and the engine let off steam, and otherwise caused much noise. The horses became frightened, and the teamster, in the effort to control them, was dragged and trampled upon by the horses, inflicting injuries from which he died. The operation of trains at this point at the time of the accident was prohibited by ordinance. *Held*, that the act of the railroad company was the proximate cause of the injuries.

—Pittsburg, C. & St. L. Ry. Co. v. Hood, 94 Fed. 618..36 C. C. A. 423

Digitized by Google

RECEIVERS.

Of railroad companies, see "Railroads," § 4.

§ 1. **Management and disposition of property.**

A receiver was appointed for a mining corporation, upon a bill alleging insolvency of the corporation, and inability to earn its charges and operating expenses. By consent, he was to operate the mines, and was authorized to borrow money, and was directed to pay all debts for labor and supplies incurred by the corporation within the six months preceding his appointment; payment to be made from earnings and income, or from money borrowed. *Held*, that the expenses of the receivership and the debts for labor and supplies were not payable alone out of the income and revenues of the corporation, but they might be paid out of the corpus of the estate.

—Reinhart v. Augusta Min. & Inv. Co., 94 Fed. 901; Manhattan Trust Co. v. Same, Id.; Van Volkenburgh v. Prout, Id. .36 C. C. A. 541

The receivership was afterwards extended to a suit to foreclose a mortgage of the mining property, on motion of the trustee of the mortgage; and a decree was passed, without objection, ordering a sale, and giving the debts for labor and supplies, and the expenses of the receivership, priority over the mortgage. A decree of distribution was passed in accordance with the decree of foreclosure, and no appeal was taken therefrom, except by certain of the mortgage bondholders, who had caused the receiver to be appointed. *Held*, that the mortgage bonds were not entitled to priority over said expenses and debts, since the parties had agreed otherwise.

—Reinhart v. Augusta Min. & Inv. Co., 94 Fed. 901; Manhattan Trust Co. v. Same, Id.; Van Volkenburgh v. Prout, Id. .36 C. C. A. 541

RECORDS.

Transcript on appeal or writ of error, see "Appeal and Error," § 6.

REDEMPTION.

From mortgage, see "Mortgages," § 5.

REHEARING.

On appeal or writ of error, see "Appeal and Error," § 9.

RELEASE.

See "Accord and Satisfaction."

RELEVANCY.

Of evidence in civil actions, see "Evidence," § 3.

REMEDY AT LAW.

Effect on jurisdiction of equity, see "Equity," § 1.

REQUESTS.

For instructions to jury in civil actions, see "Trial," § 3.

Digitized by Google

RESCISSION.

Of contract for sale of land, see "Vendor and Purchaser," § 1.

RES JUDICATA.

See "Judgment," § 2.

REVIEW.

See "Appeal and Error."

RIGHT OF WAY.

Of railroads, see "Railroads," § 2.

RISKS.

Assumed by employé, see "Master and Servant," § 2.

SALES.

See "Vendor and Purchaser."

SALVAGE.

§ 1. **Right to compensation.**

Services of tugs in towing a steamer from an offshore sand bar, on which she had grounded, in connection with their carrying out the steamer's anchors to enable her to assist in getting off the bar, are in the nature of salvage services, authorizing compensation on that basis.

—Ulster S. S. Co. v. Cape Fear Towing & Transportation Co., 94 Fed. 214 .....36 C. C. A. 201

§ 2. **Amount and apportionment.**

An allowance of $13,000 for salvage services in getting a steamer off a sand bar should be reduced 50 per cent., though the steamer was worth $300,000, the value of the tugs employed being only $18,000, all the services being rendered under the direction and control of the master of the steamer, the real services which put her afloat being, in the main, rendered by herself, operated by the master and crew, it appearing probable, the good weather continuing, that without the services of the tugs the master would have successfully floated her through the use of his own crew and appliances, no risk being incurred by the salvors, and the tugs being exposed to no danger, the skill shown in rendering the services being of the ordinary kind, the labor being the ordinary employment of the tugs and persons engaged, the time employed being less than a day, and it appearing that extraordinary awards were given by the decree to members of the crews of the tugs, such as $300 to cooks and firemen, who performed no services out of their usual routine, and whose wages were $1 a day.

—Ulster S. S. Co. v. Cape Fear Towing & Transportation Co., 94 Fed. 214 .....36 C. C. A. 201

Where salvage services which occupied less than a day are of the lowest order, and the crews of the tugs perform only services in the ordinary course of employment, the award to them should not be more than two months' pay.

—Ulster S. S. Co. v. Cape Fear Towing & Transportation Co., 94 Fed. 214 .....36 C. C. A. 201

Digitized by Google

SATISFACTION.

See "Accord and Satisfaction."

SEAMEN.

It seems that, under the general admiralty practice, a seaman injured through the use of defective appliances furnished by the owners of the ship may proceed against the ship for damages.
—Lafourche Packet Co. v. Henderson, 94 Fed. 871...36 C. C. A. 519

Where a skid used to stow barrels into the hold was broken on a prior voyage, to the knowledge of the ship's officers, so that, through the sagging of one side of it, a bolt worked up and caught a barrel being sent down, and threw it off and against a seaman engaged in the work, the ship was liable for the injuries inflicted.
—Lafourche Packet Co. v. Henderson, 94 Fed. 871...36 C. C. A. 519

SERVICE.

Of process, see "Process," § 1.

SERVICES.

See "Master and Servant," § 1.

SHIPPING.

See "Admiralty"; "Maritime Liens"; "Salvage"; "Seamen."

§ 1. **Liabilities of vessels and owners in general.**
A provision of a charter party that "the owners shall pay for insurance on the vessel," to be given any effect as between the parties, must be construed as requiring the owners to insure against all such losses as would otherwise fall on the charterer; and, where the owners failed to procure insurance, they made themselves insurers, and cannot cast upon the charterer the burden of paying damages recovered against the vessel for collision, against which they might have insured.
—The Barnstable, 94 Fed. 213.....36 C. C. A. 199

§ 2. **Carriage of goods.**
The rule that the master of a vessel has no authority by virtue of his position, either actual or apparent, to sign a bill of lading for cargo not actually received on board, applies when there is only a deficiency in part through mistake, and the owner cannot be held liable, either by the original consignee or an indorsee of the bill of lading, for such a shortage, where the quantity actually received is delivered.
—American Sugar-Refining Co. v. Maddock, 93 Fed. 980.....
36 C. C. A. 42

Where a steamer was run upon the beach solely because a leak had been discovered which could not be controlled, and water immediately came in over her deck, so that merchandise was injured, the proximate cause of the injury was the leak, and not the stranding of the vessel.
—Pacific Coast S. S. Co. v. Bancroft-Whitney Co., 94 Fed. 180.....
36 C. C. A. 135

A provision in the shipping receipts that all claims against the steamship company or any of its stockholders for damage to the goods must be presented within 30 days from the date thereof, as a condition precedent to suing the company or its stockholders, does not cover the right to

Digitized by Google

maintain a suit in rem against the ship, in which the company appears as claimant.

—Pacific Coast S. S. Co. v. Bancroft-Whitney Co., 94 Fed. 180..... 36 C. C. A. 135

A provision in a bill of lading requiring all claims for damages to be presented within 30 days from the date thereof makes the period of limitation unreasonably short, and is therefore void.

—Pacific Coast S. S. Co. v. Bancroft-Whitney Co., 94 Fed. 180..... 36 C. C. A. 135

Exceptions in a bill of lading introduced by the shipowners themselves in their own favor are to be construed most strongly against them.

—Pacific Coast S. S. Co. v. Bancroft-Whitney Co., 94 Fed. 180..... 36 C. C. A. 135

Although it may be presumed that a vessel is seaworthy when she sails, if soon thereafter a leak is found, without the ship having encountered a peril sufficient to account for it, the presumption is that she was not seaworthy when she sailed.

—Pacific Coast S. S. Co. v. Bancroft-Whitney Co., 94 Fed. 180..... 36 C. C. A. 135

In every contract for the carriage of goods by sea, there is a warranty on the part of the shipowner that the ship is seaworthy at the time of beginning her voyage, and his undertaking to safely carry the goods cannot be discharged because the want of fitness in the vessel is the result of latent defects.

—Pacific Coast S. S. Co. v. Bancroft-Whitney Co., 94 Fed. 180..... 36 C. C. A. 135

Where merchandise is shipped, and the usual bill of lading given, promising to deliver the same in good order, the dangers of the sea excepted, and the goods are found to be damaged, the burden of proof is upon the owner of the vessel to show that the injury was occasioned by one of the excepted causes.

—Pacific Coast S. S. Co. v. Bancroft-Whitney Co., 94 Fed. 180..... 36 C. C. A. 135

Common carriers by water are in the nature of insurers, and are liable for every loss or damage, however occasioned, unless it happens from the act of God or the public enemy, or by the act of the shipper, or from some other cause or accident expressly excepted in the bill of lading.

—Pacific Coast S. S. Co. v. Bancroft-Whitney Co., 94 Fed. 180..... 36 C. C. A. 135

A libel alleged a delivery of goods to a carrier pursuant to a contract of affreightment; that, notwithstanding the contract, the goods were not redelivered to libelants in like good order as received, "but, on the contrary, said merchandise was returned to said port" of shipment "in a greatly damaged condition, by reason of having been wet with sea water during said voyage, which, by reason of the negligence of" the carrier, "gained access to the interior of said ship, where said merchandise was stowed"; and "that, in consequence of the injury and damage to said merchandise, the libelants have sustained damage," etc. *Held*, that the action was not founded upon a tort, but upon the contract of affreightment, and that the claim for damages was based upon the failure of the carrier to deliver the merchandise in good condition; the averment as to negligence being merely illustrative of the manner in which the goods were damaged.

—Pacific Coast S. S. Co. v. Bancroft-Whitney Co., 94 Fed. 180..... 36 C. C. A. 135

Mere delay for the full period of four years allowed by the state statutes of limitation, in bringing a suit in rem to recover damages to cargo, is not, of itself, and in the absence of exceptional circumstances from which laches would be imputable, sufficient to justify the court in declining to entertain the suit.

—Pacific Coast S. S. Co. v. Bancroft-Whitney Co., 94 Fed. 180..... 36 C. C. A. 135

Digitized by Google

A steamer, alleged by her claimants to have been stanch, strong, and seaworthy, and fully manned, officered, and equipped, was discovered, after being only 11 hours at sea in fair weather, to have a list, due to sea water in her between-decks. The water increased so rapidly that a few hours later it was decided to run for a harbor of refuge, where the ship was at once beached to prevent foundering. *Held*, in an action for damage to the cargo, that the burden was on the carrier to show wherein and how the leak arose, so as to bring the loss within the exception in the bill of lading as to perils of the sea.
—Pacific Coast S. S. Co. v. Bancroft-Whitney Co., 94 Fed. 180..... 36 C. C. A. 135

That burden was not discharged by simply showing that the ship was in a seaworthy condition at the commencement of the voyage, and presenting evidence which merely left in doubt the question as to how the leak arose.
—Pacific Coast S. S. Co. v. Bancroft-Whitney Co., 94 Fed. 180..... 36 C. C. A. 135

§ 3. **Carriage of passengers.**
A stipulation in a passenger ticket for second-cabin passage which limits the liability of the carrier for loss of baggage to 250 francs, unless the passenger declares the value of his baggage in excess of such amount, pays for the transportation of the excess in proportion to its value, and takes a bill of lading therefor, is not so unreasonable as to be void as against public policy.
—The Kensington, 94 Fed. 885.....36 C. C. A. 533

Such a provision, though in terms limiting the liability of the "shipowner or agent" only, inures to the benefit of the ship itself, when sought to be held by proceedings in rem solely on the ground that the owner did not fully perform the contract.
—The Kensington, 94 Fed. 885.....36 C. C. A. 533

Where both carrier and passengers are citizens of the United States, and the place of completion of the contract of carriage is within this country, a stipulation for exemption from liability in the contract, authorized by the law of a foreign country, by which the contract is by its terms to be governed, but which is contrary to the public policy of this country, is not enforceable in its courts.
—The Kensington, 94 Fed. 885.....36 C. C. A. 533

The provisions of section 2 of the Harter act as to the limiting of liability by bills of lading or shipping documents do not apply to passenger tickets.
—The Kensington, 94 Fed. 885.....36 C. C. A. 533

A provision in a passenger ticket relating to a limitation of the carrier's liability for loss of baggage, plainly printed in the face of the ticket above the signatures of the ship's agent and the passenger, is a part of the contract.
—The Kensington, 94 Fed. 885.....36 C. C. A. 533

Libelants were passengers on a transatlantic steamer, and their trunks, constituting their baggage, with those of other passengers, were broken to pieces, and the contents destroyed, during the voyage. The vessel encountered unusually rough weather on the passage, and rolled heavily. A witness for libelants, who entered the compartment where the baggage was stowed immediately on the opening of the hatch at the end of the voyage, testified that he examined carefully, but could find no evidence that the trunks had been lashed or otherwise secured against movement in rough weather, and the compartment was not filled. *Held* that, in the absence of any evidence on the subject from claimants, such testimony was sufficient to support the libelants' contention of negligent stowage.
—The Kensington, 94 Fed. 885.....36 C. C. A. 533

SLANDER.

See "Libel and Slander."

Digitized by Google

STATES.

See "United States."
Public lands, see "Public Lands," § 2.

STATUTES.

Adoption by United States courts of state laws as rules of decision, see "Courts," § 1.
Of limitation, see "Limitation of Actions," § 1.

STATUTES CONSTRUED.

UNITED STATES.

STATUTES AT LARGE.

1864, July 2, ch. 217, §§ 3, 6, 13 Stat. 365 560
1880, June 16, ch. 244, 21 Stat. 287 603
1893, Feb. 13, ch. 105, § 2, 27 Stat. 445 533
1897, July 24, ch. 11, § 1, Schedule B, pars. 97, 98, 30 Stat. 156..... 626
1898, July 1, ch. 541, §§ 64b, 67f, 30 Stat. 564..... 677

REVISED STATUTES.

§ 921 156
§§ 3477, 3737..... 52
§ 4920 125
§ 5151 584
§ 5209 .....105, 106
§ 5242 536

ALABAMA.

CODE 1896.

§ 2067 503

CALIFORNIA.

CODE OF CIVIL PROCEDURE.

§ 813 135

DAKOTA.

COMPILED LAWS 1887.

§§ 1149, 1150..... 278

LAWS.

1887, March 11, ch. 47, p. 106..... 278

ILLINOIS.

STARR & CURTIS' ANNOTATED STATUTES 1896.

Volume 1.

Page 777, art. 9, § 49..... 89

Volume 3.

Page 3241 156

IOWA.

CODE.

§ 3466 254

McCLAIN'S ANNOTATED CODE.

§ 4429 494

LOUISIANA.

REVISED CIVIL CODE 1870.

Art. 3237 525

MICHIGAN.

HOWELL'S ANNOTATED STATUTES.

Volume 3.

§§ 8427a–8427p 677

MINNESOTA.

GENERAL STATUTES 1894.

§ 1623..... 214

MISSOURI.

LAWS.

1895, March 18, p. 168..... 476

MONTANA.

CONSTITUTION.

Art. 13, § 6..... 1

NEBRASKA.

CODE OF CIVIL PROCEDURE.

§ 497a 233

COMPILED STATUTES 1881.

Page 595 233

NEVADA.

LAWS.

1887, March 3, ch. 103, p. 102..... 603

Digitized by Google

NEW YORK.

LAWS.

1892, May 6, ch. 493, p. 1023..... 471
1892, May 18, ch. 688, p. 1824..... 634

OHIO.

REVISED STATUTES.

§ 3313 157
§ 3380 156

PENNSYLVANIA.

LAWS.

1836, June 13, p. 616..... 45
1858, April 20, p. 363..... 45
1871, Feb. 24, p. 126..... 654
1889, May 23, p. 277..... 84
1895, June 24, p. 251..... 45

TEXAS.

CITY CHARTERS.

Lampasas. Laws 1873, April 18, ch. 90, p. 288..... 318

LAWS.

1873, April 18, ch. 90, p. 288. Lampasas City Charter..... 318

STAY.

Pending appeal or writ of error, see "Appeal and Error," § 5.

STOCK.

Corporate stock, see "Corporations," § 2.

SUNDAY.

A debtor cannot defeat the collection of a valid debt by an assignee, on the ground that it was sold and assigned to him on Sunday, in violation of the laws of the state, where the transfer was subsequently ratified by the assignor, and became binding between the parties to it; and such ratification renders it valid from the date of the actual assignment for the purpose of an attachment thereon procured by the assignee on that day.

—Tennent-Stribling Shoe Co. v. Roper, 94 Fed. 739..36 C. C. A. 455

TARIFF.

See "Customs Duties."

TAXATION.

§ 1. Lien and priority.

Under Gen. St. Minn. 1894, § 1623, which provides that "the taxes assessed upon personal property shall be a lien upon the personal property of the person assessed from and after the time the tax books are received by the county treasurer," the lien so created is paramount to any other lien upon the property, prior or subsequent, in favor of private parties.

—State of Minnesota v. Central Trust Co. of New York, 94 Fed. 244 .....36 C. C. A. 214

TORTS.

See "Assault and Battery," § 1; "Libel and Slander"; "Malicious Prosecution"; "Negligence"; "Nuisance."
Liability of corporation, see "Corporations," § 4.

TRESPASS.

To the person, see "Assault and Battery," § 1

Digitized by Google

TRIAL.

See "Witnesses."
Criminal prosecutions, see "Criminal Law," § 4.
Of particular actions, see "Libel and Slander," § 8.

§ 1. Reception of evidence.

Rather than decide the case on the legal presumptions arising from the proof, the court might have compelled the carrier to show the cause of the leak, if known, though inconsistent with the theory on which the parties were trying the case.

—Pacific Coast S. S. Co. v. Bancroft-Whitney Co., 94 Fed. 180..... 36 C. C. A. 135

An objection to the opinion of a witness as irrelevant and incompetent is too general and indefinite.

—Western Coal & Mining Co. v. Berberich, 94 Fed. 329..... 36 C. C. A. 364

§ 2. Taking case or question from jury.

Where the trial judge is satisfied, upon the evidence, that plaintiff is not entitled to recover, and that a verdict, if rendered for plaintiff, should be set aside, the jury may be directed to find for defendant.

—Detroit Crude-Oil Co. v. Grable, 94 Fed. 73.....36 C. C. A. 94

A request for a charge that, under the evidence, the verdict must be for defendant, is equivalent to a motion to direct a verdict.

—Detroit Crude-Oil Co. v. Grable, 94 Fed. 73.....36 C. C. A. 94

§ 3. Instructions to jury.

It was not error for the court to refuse a special instruction on an issue not pleaded, and impliedly excluded from the consideration of the jury.

—Lamson v. Beard, 94 Fed. 30; C. B. Congdon & Co. v. Same, Id.; Phelps v. Same, Id.....36 C. C. A. 56

The court properly refused requests to charge that singled out and gave undue prominence to particular items of evidence.

—Western Coal & Mining Co. v. Berberich, 94 Fed. 329..... 36 C. C. A. 364

Where the charge in chief was a clear and accurate statement of the law, covering every aspect of the case, it was proper to refuse special requests.

—Western Coal & Mining Co. v. Berberich, 94 Fed. 329..... 36 C. C. A. 364

§ 4. Trial by court.

Where a jury is waived by a stipulation in writing, in a circuit court, in an action at law, the court cannot be required to make special findings of fact, but may make either a special or general finding, and should not make both. Such finding must state the ultimate facts of the case, and not be a recital of evidential facts or circumstances which may tend to prove the ultimate facts, or from which they may be inferred.

—State Nat. Bank v. Smith, 94 Fed. 605.....36 C. C. A. 412

§ 5. Waiver and correction of irregularities and errors.

Error in refusing to direct a verdict for defendant, on his motion, at the close of plaintiff's evidence, is waived, where defendant proceeds with the case, and gives evidence on his part.

—Detroit Crude-Oil Co. v. Grable, 94 Fed. 73.....36 C. C. A. 94

TROVER AND CONVERSION.

Action for conversion of mortgaged property, see "Chattel Mortgages," § 1.

Digitized by Google

TRUSTS.

Trust deeds, see "Chattel Mortgages."

§ 1. Establishment and enforcement of trust.
Where a trustee of an express trust openly repudiates it, and asserts a title in himself to the trust estate, with the knowledge of the beneficiary, the same diligence should be exercised by the person injured in asserting his rights as is required of one asserting a constructive trust, or attempting to rescind a contract on the ground of fraud or mistake.
—Curtis v. Lakin, 94 Fed. 251.....36 C. C. A. 222

UNITED STATES.

See "Customs Duties."
Courts, see "Courts," § 1.
Public lands, see "Public Lands," § 1.

§ 1. Property, contracts, and liabilities.
Under Rev. St. § 3737, declaring that any assignment of a contract with the United States shall cause the annulment of the contract, so far as the United States are concerned, the government may treat it as annulled, or recognize the assignment.
—Dulaney v. Scudder, 94 Fed. 6.....36 C. C. A. 52

§ 2. Claims against United States.
There is no claim against the United States, and therefore no assignment of it, within Rev. St. § 3477, declaring void all assignments of a claim against the United States, and all powers of attorney or other authorities for receiving payment of any such claim, unless made after issue of warrant for payment thereof, where one having a contract to do work for the United States, before doing any work under it, contracts with another to obtain advances with which to do the work, agreeing to make payment for the advances out of the moneys to be received from the government for the work, and executes a power of attorney to such other person, authorizing him to collect all money to become due on the contract with the government.
—Dulaney v. Scudder, 94 Fed. 6.....36 C. C. A. 52

USURY.

Contracts by building and loan associations, see "Building and Loan Associations."

VENDOR AND PURCHASER.

§ 1. Modification or rescission of contract.
Plaintiff, who had secured from defendants an option to purchase from them an interest in certain mining claims at the expiration of nine months, agreeing to prosecute development work on the claims meantime, expending a certain sum, and that, if work ceased thereon for 30 days, the option should be forfeited, hired two of the defendants to work on the claims. Shortly after they had commenced work, and while he was indebted to them for wages, he left them with a small amount of supplies, promising to return in three weeks. He did not return, or send them either money or supplies, and they heard nothing from him for about three months. A month after he left, they suspended work, and, after the expiration of 30 days, declared the option forfeited. *Held*, that their action was justified.
—Hanson v. Smith, 94 Fed. 960.....36 C. C. A. 581

Digitized by Google

§ 2. **Rights and liabilities of parties.**
A vendor who sold land to a syndicate, conveying to one member and accepting his individual notes, secured by mortgage on the property, for the unpaid purchase money, with knowledge that such arrangement was made for the express purpose of relieving another of the purchasers from personal liability for such unpaid purchase money, is estopped to claim such liability, and has no right of action against him on the notes, or otherwise, to recover a deficiency remaining due after foreclosure of the mortgage; nor was such right given by a declaration of trust executed by the grantee, declaring the interest of each member of the syndicate in the property and their several liabilities as between themselves.
—Underwood v. Patrick, 94 Fed. 468.....36 C. C. A. 330

VERDICT.

Review on appeal, see "Appeal and Error," § 10.

WAIVER.

See "Estoppel."
Of defects in pleading, see "Pleading," § 2.
Of defense to insurance policy, see "Insurance," § 5.
Of irregularities on trial, see "Trial," § 5.

WARRANTY.

By insured, see "Insurance," § 3.

WATERS AND WATER COURSES.

See "Levees."

WAYS.

Public ways, see "Highways."

WILLS.

§ 1. **Construction.**
Where the amount of a legacy is dependent upon the amount of decedent's estate, at a fair valuation, at the time of his death, the value of the estate will be computed by deducting his debts, for which his estate is liable, from the fair value of the assets.
—Dickey v. Dickey, 94 Fed. 231.....36 C. C. A. 211

§ 2. **Rights and liabilities of devisees and legatees.**
A refusal to pay a legacy is not willful and without reasonable cause, so as to entitle legatee to interest, where he claimed a larger sum than entitled to, and, on suit, was allowed only half of the amount claimed.
—Dickey v. Dickey, 94 Fed. 231.....36 C. C. A. 211

If legacies bear interest within the provisions of Mills' Ann. St. § 2252, allowing creditors interest for all moneys after they become due, on any bond, bill, or promissory note or other instrument in writing, they do so only after an order of the court has been made directing their payment.
—Dickey v. Dickey, 94 Fed. 231.....36 C. C. A. 211

WITNESSES.

See "Evidence."
Experts, see "Evidence," § 6.

Digitized by Google

§ 1. **Examination.**

Permitting the prosecution to propound leading questions to one of its witnesses is within the discretion of the trial court, and cannot be made the basis of an assignment of error.

—Peters v. United States, 94 Fed. 127.....36 C. C. A. 105

A witness may refresh his memory by the use of any written memorandum, although it was not made by himself, if he saw it while the facts therein stated were fresh in his recollection, and he knew that the memorandum as then made was correct.

—Pacific Coast S. S. Co. v. Bancroft-Whitney Co., 94 Fed. 180..... 36 C. C. A. 135

Where a question asked an expert witness is framed on the assumption of certain facts, counsel may assume the facts in accordance with his theory of them.

—Western Coal & Mining Co. v. Berberich, 94 Fed. 329..... 36 C. C. A. 364

§ 2. **Credibility, impeachment, contradiction, and corroboration.**

While a party is not permitted to impeach his own witness, he is not precluded from showing facts inconsistent with some of the statements of the witness.

—Peters v. United States, 94 Fed. 127.....36 C. C. A. 105

[END OF VOLUME.]

Digitized by Google

Digitized by Google

Digitized by Google

Digitized by Google

Digitized by Google

Digitized by Google

Digitized by Google

Digitized by Google

Digitized by Google

Digitized by Google